motor sport UK

2026 National Competition Rules

Edition 4

MEMBER OF FIA

Keeping you On Track since 2011

RYAN
MOTORSPORT INSURANCE

Insurance products available

- Accident damage On Track
- Rally damage On Event
- Storage and transit
- Liability
- Personal accident
- Track day

24/7 online system to request quotes and purchase cover.
Season or single event policy. Log on now for a quote.

- Competitive premiums
- Fast claim payments
- Simple quote form
- Knowledgeable staff

Complete an online quote request form at

www.ryanmi.com

Email us: info@ryanmi.com Call us: +44 (0)1799 524202

Ryan Motorsport Insurance Limited is an appointed representative (557405) of Independent Broking Solutions Limited who are authorised and regulated by the Financial Conduct Authority. Its Financial Services registration number is 312026.

The Motorsport UK 2026 National Competition Rules

70th Edition

The Motorsport UK National Competition Rules become effective 1st January 2026. This publication supersedes previous editions.

Motorsport UK is the national governing body and membership organisation for four-wheeled motorsport in the UK. As one of the founding members of the FIA and authorised by the UK Government to govern the sport, we exist to keep the sport safe, fair and fun for everyone - from first-time competitors to world-class professionals.

All enquiries concerning motorsport should be addressed to:

Motorsport UK, 141 Command Works,
Bicester Motion, Bicester, OX27 8FY

hello@motorsportuk.org 01753 765 000

www.motorsportuk.org

MEMBER OF FIA

© The contents of the National Competition Rules are copyright and must not be reproduced without the written consent of Motorsport UK Association Ltd.

Contents

Chapter 1

General Governance and Establishment 20

Appendix 1 - Definitions and Nomenclature 26
Appendix 2 - Competition Fees 45
Appendix 3 - Insurance 55
Appendix 4 - Competing Abroad 65

Chapter 2

Judicial 67

Appendix 1 - General Breaches 73
Appendix 2 - Schedule of Penalties and Who May Apply Them 75
Appendix 3 - Judicial Procedures at Events 78
Appendix 4 - Appeals 80
Appendix 5 - Judicial Proceedings before Championship Stewards 84
Appendix 6 - Judicial Proceedings before the National Court 87
Appendix 7 - National Court Practice Direction 89
Appendix 8 - Breaches of Technical Regulations 100
Appendix 9 - Protest Procedure 104
Appendix 10 - Right of Review 107
Appendix 11 - Fees and Fines and Obligations 109
Appendix 12 - Penalty Points 110
Annexe A - Time and Place Penalties 111

Chapter 3

Organisers 112

Appendix 1 - Permit Application Regulations 117
Appendix 2 - Permissions of National and Local Authorities 118
Appendix 3 - Warning Notices 119
Appendix 4 - Participant Undertakings and Declarations (Ch.6) 121
Appendix 5 - Entries to Events 123
Appendix 6 - Publication of Results 126
Appendix 7 - Certificates of Exemption 127
Appendix 8 - Grade of Events 128
Appendix 9 - Fixture Lists 130
Appendix 10 - Official Documents 131
Appendix 11 - Rights of Organisers 133

Chapter 4

Championships 135

Appendix 1 - Championship Officials 138
Appendix 2 - Conditions applying to all Car and Truck Race, Kart Race and Speed Event Championship Permits 140
Appendix 3 - Car and Truck Race Championships 141
Appendix 4 - Stage Rally Championships 144
Appendix 5 - Speed Event Championships 145
Appendix 6 - Kart Racing Championships 146

Chapter 5

Officials 148

PART A

Appendix 1 - Declaration and Undertakings 155
Appendix 2 - Officials Licensing Criteria and Requirements 156
Appendix 3 - Registered Marshals and other Event Officials 158
Appendix 4 - Stewards 160
Appendix 5 - Clerks of the Course 163
Appendix 6 - Technical Commissioners, Technical Officials including Scrutineers, Eligibility and Environmental Scrutineers 173
Appendix 7 - Timekeepers and Handicappers 178
Appendix 8 - Driving Standards Observers (Race) 182
Appendix 9 - Radio Co-ordinators and Radio Controllers 183
Appendix 10 - Rescue Crew and Rally Recovery Crew 185
Appendix 11 - Emergency and Medical Officials 186
Appendix 12 - Safety Delegates (Rally) 189
Appendix 13 - Safety Car Crew (Rally) 190
Appendix 14 - Liaison Officers 191
Appendix 15 - Club Safeguarding Officers 199
Appendix 16 - ASN Trainers 200
Appendix 17 - Officiel d'Honneur 201
Appendix 18 - Charts 202

PART B

Appendix 1 - Event Secretaries 206
Appendix 2 - Event Stewards 207
Appendix 3 - Chief Marshals 208
Appendix 4 - Championship Co-ordinators 209
Appendix 5 - Mentors and Assessors 210
Appendix 6 - Driving Standards Observers (non-Race) 211

Chapter 6

Licensing 212

Appendix 1 - Competitors and Entrants Responsibilities 216
Appendix 2 - Medical 221
Appendix 3 - Grades of Event and Licence Types and Grades 226
Appendix 4 - Competition Licence Applications, Retention and Upgrading General 229
Appendix 5 - Competition Licence Applications, Upgrading, Downgrading and Retention of Licences – Race 231
Appendix 6 - Competition Licence Applications, Upgrading, Downgrading and Retention of Licences – Kart 234
Appendix 7 - Competition Licence Application, Upgrading Downgrading and Retention of Licence – Rallying 236
Appendix 8 - Competition Licence Applications, Upgrading, Downgrading and Retention of Licences – RS Licences 238
Annexe A - Licence Eligibility 240
Annexe B - Licence Structure 243

Chapter 7

Competitor Vehicles and Vehicle Safety Equipment 251
Appendix 1 - Competition Car Log Books (CCLB) and Vehicle Passports (VP) 255
Appendix 2 - General Technical Regulations 256
Appendix 3 - Roll Over Protection Systems (ROPS) 262
Appendix 4 - Fuel and Fuel Systems 271
Appendix 5 - Electrical Systems 273
Appendix 6 - Fire Extinguishers and Systems 275
Appendix 7 - Seats Harnesses and Headrests 279
Appendix 8 - Exhausts Silencing and Noise Testing 284
Appendix 9 - Onboard Cameras 286
Appendix 10 - Competition Numbers 288
Appendix 11 - Electrified Vehicles 289
Appendix 12 - Scrutineering 299
Appendix 13 - Charts and Diagrams 301

Chapter 8

Permitted Fuels and Tyres and Testing 326
Appendix 1 - Permitted Fuels 328
Appendix 2 - **Fuel** (and other **Vehicle** fluids) Testing 331
Appendix 3 - Tyre Testing and Checking 334
Appendix 4 - Permitted Tyre Lists 337

Chapter 9

Competitor Personal Safety Equipment 350

Chapter 10

Circuits and Venues 360
Appendix 1 - Regulations for Track Licences and Track Licence Applications 362
Appendix 2 - Specific Regulations for Race and Speed and Temporary Drag Strip Events 366
Appendix 3 - Specific Regulations for Marshals Posts 369
Appendix 4 - Medical Facilities – Fire Precautions and Equipment – Emergency Rescue Vehicles at Race Circuits 370
Appendix 5 - Specific Regulations for Scrutineering Areas 372
Appendix 6 - Regulations for Endurance and Night and Bad Weather Racing 373
Appendix 7 - Guidance Notes on Dealing with Oil 375

Chapter 11

Emergency and Medical Services (Units & Equipment) 376
Appendix 1 – Rescue Units 381
Appendix 2 – Stage Safety Units (SSU) 383
Appendix 3 – Medical Cars 384
Appendix 4 – Recovery Units 385
Appendix 5 – Fire Tenders 386
Appendix 6 – Race Medical Centre 387
Appendix 7 – Kart Circuit Medical Centre 389
Appendix 8 – Basic First Aid Kit – Rally Doctors 390
Appendix 9 – Charts and Tables 391

Chapter 12

Race 396
Appendix 1 - Junior Car Racing 398
Appendix 2 - Championships and Series 399
Appendix 3 - Race Officials 401
Appendix 4 - Organisers' Regulations and Restrictions 403
Appendix 5 - Incidents, Medical Facilities and Emergency Rescue 409
Appendix 6 - Competition Regulations 410
Appendix 7 - Track Regulations and Driving Standards 416
Appendix 8 - Signals by Light Panels and Flags 419
Appendix 9 - End of Race Results 426
Appendix 10 - Penalties 427
Appendix 11 - Pit and Paddock Regulations 429
Appendix 12 - Competitor Regulations 431
Appendix 13 - Competitors Vehicles Technical Regulations 432
Appendix 14 - Single Seater Dimensions 436

Chapter 13

Rally 437
Appendix 1 - Regulations Applying to All Rallies including Public Relations and Sound Testing 439
Appendix 2 - Duties and Responsibilities of Clerks of the Course for All Types of Rally 443
Appendix 3 - Specific Regulations for Road Events 451
Appendix 4 - Road Events – Routes and Sections 455
Appendix 5 - Road Events - Controls and Timing Including Results 459
Appendix 6 - Exemption of Permit Events 464
Appendix 7A - Road Scheduled Time Events 466
Appendix 7B - Road Scheduled Time Events 468
Appendix 8 - Target Timed Special Stage Event Penalties 470
Appendix 9 - Competitors Regulations including Licensing 472
Appendix 10 - Competitors Specific Regulations for Special Stage Rallies 475
Appendix 11 Part A - Specific Regulations for Special Stage Rallies 478
Appendix 11 Part B - Specific Regulations for Single Venue Stage Rallies and Rally Time Trials 480
Appendix 11 Part C - Specific Regulations for Targa Road Rallies 482
Appendix 12 - Special Stage Routes and Sections 485
Appendix 13 - Special Stage Controls, Timing and Penalties 491
Appendix 14 - Schedule Timed Special Stage Event Penalties 497
Appendix 15 - Technical Regulations - Road, Endurance and Historic Road Rally Cars 499
Appendix 16 - Technical Regulations – Special Stage Rally Cars 505
Appendix 17 - Technical Regulations – Historic Special Stage Rally Cars 513
Appendix 18 - Servicing and Organised Assistance 517
Appendix 19 - PR Requirements Charts 519
Appendix 20 - Medical and Safety Cover 522
Appendix 21 - Specific Regulations for Junior Rally Driver Championships 525
Appendix 22 - Specific Regulations for Special Stage Practice / Training Events 526
Appendix 23 - Rally Drawings 527
Appendix 24 - Class Requirements 532

Chapter 14

Sprint, Hill Climb & Hot Lap Challenge 534
Appendix 1 - Organisers Regulations Including Scrutineering 536
Appendix 2 - Competitors Regulations 540
Appendix 3 - Paddock and Track Regulations 543
Appendix 4 - Technical Regulations 545
Appendix 5 - Specific Regulations for Hot Lap Challenge 553

Chapter 15

Drag Race 559

Chapter 16

Autocross and Rallycross 565
PART A (AUTOCROSS AND CLUBCROSS)
Appendix 1 - Organisers Regulations 567
Appendix 2 - Medical and Rescue Requirements 571
Appendix 3 - Results 572
Appendix 4 - Competitors Regulations 573
Appendix 5 - Technical Regulations 575
PART B (RALLYCROSS)
Appendix 6 - Organisers Regulations 586
Appendix 7 **-** Medical and Rescue Requirements 594
Appendix 8 - Competitors Regulations 595
Appendix 9 - Paddock Regulations 598
Appendix 10 - Technical Regulations 599
Appendix 11 - Rallycross Spaceframe Technical Regulations 605
Appendix 12 - Spaceframe Drawings 608
PART C (OFF-ROAD RACING)
Appendix 13 - Off-Road Racing Specific Regulations 609

Chapter 17

Trials 610
Appendix 1 - Organisers Regulations 612
Appendix 2 - Competitors Regulations 618
Appendix 3 - Technical Regulations – Classic Reliability Trial Vehicles 624
Appendix 4 - Technical Regulations – Car Trials Formula 629
Appendix 5 - Technical Regulations – National Trials Car Formula 634
Appendix 6 - Technical Regulations – Historic Sporting Trial Car Formula (HST) 637
Appendix 7 - Charts and Diagrams 641

Chapter 18

Karting 646
Appendix 1 - Organisers Regulations General 651
Appendix 2 - Kart Race Circuits General 652
Appendix 3 - Equipment for Events at Kart Race Circuits 653
Appendix 4 - Officials and their Obligations 655
Appendix 5 - Race Procedures 658
Appendix 6 - Short Circuit specific Judicial Provisions 665
Appendix 7 - Competitors Regulations including Personal Clothing and Licences 666
Appendix 8 - General Technical Regulations 671
Appendix 9 - Kart Race Technical Drawings with Dimensions 687

Chapter 19

Autotest 692
Appendix 1 - Organisers Regulations 694
Appendix 2 - Clerk of the Course Duties and Responsibilities 697
Appendix 3 - Technical Regulations applying to all Events 698
Appendix 4 - Autotests Specific Regulations 699
Appendix 5 - Production Car Autotests Specific Regulations 700
Appendix 6 - AutoSOLO Specific Regulations 702
Appendix 7 - Competitor Regulations including Licensing 704
Appendix 8 - Summary of Requirements 705
Appendix 9 - Drawings 706

Chapter 20

Cross Country 707
Appendix 1 - Organisers Regulations – All Events 709
Appendix 2 - Organisers Regulations – All Events using the Highway 711
Appendix 3 - Organisers Regulations - Definitions of Event Sections using the Highway 716
Appendix 4 - Organisers Regulations – Trials and Un-timed Events 719
Appendix 5 – Organisers Regulations – Timed Events 722
Appendix 6 - Competitors Regulations – All Events 737
Appendix 7 - Competitors Regulations - All Events using the Highway and Hill Rallies 739
Appendix 8 - Competitors Regulations – Trials and Un-timed Events 746
Appendix 9 - Competitors Regulations - All Timed Events 751
Appendix 10 - Technical Regulations (not Junior Trials) 761
Appendix 11 - Charts and Diagrams 769
Appendix 12 - Public Relations Guidance 777
Appendix 13 - Technical Regulations for Junior Trials Vehicles 778

Chapter 21

Land Speed Records 780
Appendix 1 - General Provisions 782
Appendix 2 - FIA World, International and National Records 787

Chapter 22

Future Regulation Changes 788
Appendix 1 – General Governance and Establishment (Chapter 1) 790
Appendix 2 – Judicial (Chapter 2) 791
Appendix 3 – Organisers (Chapter 3) 792
Appendix 4 – Championships (Chapter 4) 793
Appendix 5 – Officials (Chapter 5) 794
Appendix 6 – Licensing (Chapter 6) 795
Appendix 7 – Competitor Vehicles and Vehicle Safety Equipment (Chapter 7) 797
Appendix 8 – Permitted Fuels and Tyres and Testing (Chapter 8) 798
Appendix 9 – Competitor Personal Safety Equipment (Chapter 9) 799
Appendix 10 – Circuits and Venues (Chapter 10) 800
Appendix 11 – Emergency and Medical Services (Units & Equipment) (Chapter 11) 801
Appendix 12 – Race (Chapter 12) 802
Appendix 13 – Rally (Chapter 13) 803
Appendix 14 – Sprint, Hill Climb and Hot Lap Challenge (Chapter 14) 810
Appendix 15 – Drag Race (Chapter 15) 811
Appendix 16 – Autocross and Rallycross (Chapter 16) 812
Appendix 17 – Trials (Chapter 17) 813
Appendix 18 – Karting (Chapter 18) 818
Appendix 19 – Autotest (Chapter 19) 819
Appendix 20 – Cross Country (Chapter 20) 820
Directory 822

David Richards CBE

Chair's Message

Motorsport today continues to evolve at remarkable speed. The past year has reminded us just how dynamic, resilient and inspiring our community truly is. Across every discipline, from club grassroots to world-class events, the UK remains a global leader in motorsport, a nation powered by innovation, expertise and an enduring passion for competition.

As the National Governing Body, our responsibility is twofold.

We power the sport

Every day, we work to ensure motorsport is safe, fair and fun for everyone involved. Central to this are the National Competition Rules, the framework that protects the integrity of the sport. These rules set out how competition is run, how safety is upheld, and how fairness is maintained across all disciplines. They are the foundation on which our entire ecosystem stands, enabling thousands of competitors and volunteers to take part in confidence.

This year has seen significant progress across licensing, permitting, safeguarding and regulations, strengthening that foundation even further. Our community of competitors, volunteers, officials and clubs continues to demonstrate exceptional dedication, delivering more than 3,500 permitted events nationwide. Their commitment keeps British motorsport running with professionalism and pride.

We also power the future

Motorsport is changing - shaped by new technologies, shifting expectations, and a new generation eager to get involved. Vision 2030 sets out our plan to meet this moment. From strengthening the member experience, to modernising our digital ecosystem, to championing sustainability and inclusive pathways, we are preparing the sport for long-term growth. This is not just about protecting our heritage; it is about embracing innovation and ensuring that motorsport remains relevant, responsible and rewarding for years to come.

This past year, we have deepened support for clubs, expanded opportunities for new participants, and invested in the systems and standards that will make taking part simpler and more enjoyable. We have seen progress across environmental initiatives, volunteer development, and technical leadership - evidence of a community not just keeping pace with change, but leading it.

None of this would be possible without the extraordinary people who power the sport. To our 64,000 competitors, 11,000 volunteers and officials, 600 clubs, and the thousands of individuals who contribute behind the scenes, a sincere thank you. Your passion is the engine of everything we do, and the reason British motorsport continues to set the benchmark on the world stage.

As we look ahead, our focus remains clear: **to get more people enjoying motorsport, more often**. By supporting our current community, reconnecting with those who've stepped away, and inspiring new fans to take their first steps into the sport, we will build an even stronger foundation for the future.

Together, we will continue to power the sport, and its future.

David Richards CBE, Motorsport UK Chair

History & Guidance

Introducing Motorsport UK

Powering the Future of British Motorsport

Motorsport UK is the national governing body and membership organisation for four-wheeled motorsport in the UK. As one of the founding members of the FIA and authorised by the UK Government to govern the sport, we exist to keep the sport safe, fair and fun for everyone - from first-time competitors to world-class professionals. As custodians of the sport's rules, standards, safety and development, we champion a vibrant, diverse community of competitors, volunteers, clubs and venues across the country.

Our role spans the entire sport. We licence competitors and officials, train and support volunteers, regulate events, protect safety standards, and help clubs bring motorsport to life across more than 3,500 permitted events each year. We also invest in the sport's future - promoting participation, growing new pathways, modernising systems and championing sustainability, innovation and inclusivity across the UK.

We oversee 13 different motorsport disciplines, from grassroots events to global showcases, proving that motorsport is for every interest and every budget.

What Are The National Competition Rules For?

The Foundation of Safe, Fair, Fun Motorsport

The National Competition Rules (NCR) define how motorsport operates in the UK. They ensure every event from grassroots autoSOLOs to international-level circuit racing, runs safely, consistently and with integrity. We govern these rules to inform competitors, empower officials and give clubs a clear, trusted framework for delivering competition. The NCR uphold the standards that allow our sport to thrive and the community to compete with confidence.

The NCR are practical, accessible and built to be used. Whether you are preparing your car, making decisions trackside or organising a championship, the NCR gives you clarity on what is required. It supports safe, fair competition across all 13 disciplines - allowing participants to focus on the enjoyment of the sport while ensuring every event meets the highest standards of safety and governance.

We're Here To Help - Contact Us

Here to Support You, Every Step of the Way

Our team is here to guide you through any part of the NCR. Whether you're a competitor with a technical query, an official looking for guidance, or a club seeking help to deliver an event, we're here to make your motorsport experience smoother, safer and more enjoyable.

hello@motorsportuk.org

01753 765 000

Awards, Merits & Appointments

Lifetime Achievement Award

This is the highest honour bestowed by the Motorsport UK Board. It is presented annually to a member of the UK motorsport community in recognition of outstanding achievement over many years in the sport.

2005	Tom Delaney
2007	Peter Cooper
2008	Howard Lapsley
	Les Needham
2009	Howard Strawford
2011	Denis Cardell
	Tony Fletcher
2012	Ron Smith
2013	Andy Watson
2014	Len Pullen
2015	David Morley
2016	Sir Stirling Moss
	David Butler MBE
2017	Sir Frank Williams
	Murray Walker OBE
2021	Sir Jackie Stewart
	Jimmy McRae
	Jonathan Lord
2022	Ron Dennis CBE
	Steve Tarrant
2023	Nigel Mansell CBE
	Bob Kettleboro
2024	Damon Hill OBE

Prince Michael Award of Merit

The Prince Michael Award of Merit is a prestigious personal award made by Motorsport UK to a maximum of two recipients each year in recognition of meritorious service to British motorsport.

1991	Jack Romain
1992	Tony Bird
1993	Peter Cooper/
	Tony Fletcher
1994	John Felix/
	George Hall
1995	Brian Molyneux
1996	Tom Dooley/
	Dick Newsum
1997	Alec Rivers Fletcher/
	Donald Grieve
	Professor Sid Watkins*
1998	Michael Fenwick/
	Keith Douglas
2000	Robert Rae
2002	Tony Reynolds
2004	Ken Walker
2007	Colin Rossborough
2008	Stuart Turner
2009	David Butler MBE
2011	Michael
	Southcombe
2013	Colin Hilton/
	Ronnie Trouton MBE
2015	Les Needham
2018	Tony Scott Andrews
2021	Dr Ian Roberts
2022	Jonathan Palmer
2023	Peter Riches
2024	Alan Gow
	Tom Purves

Sir Malcolm Campbell Trophy

Awarded by the Motorsport UK Board to recognise excellence by a British individual or group.

2009	Brawn GP
2010	Dario Franchitti
2013	Williams Hybrid Power
2015	Paul Fletcher
2020	Paul Howarth
2021	Ford Performance
2022	Susie Wolff MBE
2023	Malcolm Wilson OBE
2024	Zak Brown, McLaren

Environmental Sustainability Award

The Motorsport UK Environmental Award was created to recognise a truly exceptional or outstanding achievement or contribution towards environmental responsibility and the active promotion of sustainability within motorsport activities, events and communications.

2012 Drayson Racing
2013 Williams Advanced Engineering
2015 Greenpower
2016 Anglesey Circuit
2018 Rally4Wales
2021 Extreme E
2022 Silverstone Circuit
2023 Rali Ceredigion
2024 Goodwood

The Keith Duckworth Award

The Keith Duckworth Award was introduced by the Motorsport UK Board to recognise technical excellence in motorsport design and engineering.

2022 Sir Patrick Head
2023 Ross Brawn
2024 Prof.Gordon Murray CBE

The Murray Walker Award

The Murray Walker Award is dedicated to the much-loved motorsport commentator who passed away in 2021 and is still fondly remembered by many as 'the voice of Formula 1'.

2022 Martin Brundle
2023 Steve Rider
2024 Louise Goodman

Officiel d'Honneur Appointments

Long-serving Motorsport UK officials who have completed their active service in motorsport may be invited to become an Officiel d'Honneur in recognition of their commitment to the sport. The following people have accepted the position of Officiel d'Honneur for 2024

Michael Allison
George Bailey
William Beattie
Ian Bennie
Ken Blackburn
Gerry Blythe
Harry Chapell
Tim Hassall
Allan Dean-Lewis MBE
Ron McCabe
Norman Manser
John Wood
Bob Wright
Peter Liddle
Chris Mount
Dale Wells
David Swinton
Neil Hanson
Leonard Pullen
Graham Malcolm
Howard West

Organisational Structure

The Board

Company Secretary: **Craig Murray**

David Richards CBE
Chair

Nicole Bearne
Director

Hugh Chambers
Director

Karun Chandhok
Director

Chris Cooper
Director

David Lapworth
Director

Katrina May-Kwan
Director

Richard Norbury
Director

Nick Pontefract
Director

Christopher Tate
Director

Adrienne Watson
Director

Roger Wills
Director

The Council

Chair: **Christopher Tate**

Nick Algar
Will Barnes
Nicole Bearne
Andrew Bisping
Wilson Carson
Hugh Chambers
Jeremy Cooke
Sandy Denham
Domino Duhan
Philip Foster
Louise Goodman
Alan Gow
Rupert Hine
Louise Kennedy
David Lapworth
Duncan McGregor
Paul McMorran
Nicky Moffitt
Richard Norbury
Jonathan Palmer
Paul Parker
Gethin Rees
Gwyn Reynolds-Jones
David Richards CBE
Paul Trafford
John Vigor
Adrienne Watson
Ian Watson
Mark Wilkinson
Roger Wills
Kevin Witton
Simon Woodall

Organisational Structure

Senior Management

Hugh Chambers
Chief Executive Officer
Alison Dowsett Executive Assistant

Colin Clark
Commercial Director

Polly Dedman
Director of Marketing

Claire Kirkpatrick
Director of Club & Volunteer Development

Craig Murray
Finance Director

John Ryan
Sport & Safety Director

Ian Smith
Technical Director

Chris Walkingshaw
HR & Operations Director

Team Leaders

Head of Safety:
Dan Carter

Head of Esports:
Paul Crawford

Competitions & Clubsport Manager:
Simon Fowler

Head of Rallying:
Jonathan Jackson

Head of Safeguarding:
Vickie Lewis

Head of Race & Speed:
Cheryl Lynch

Head of Karting:
Dan Parker

Head of Digital Products:
Ashley Smith

Head of Member Services:
Michael Wentworth

Head of Legal:
Sian Woolley

We're Here to Help - Contact Us
Here to Support You, Every Step of the Way

hello@motorsportuk.org

01753 765 000

Governance

Motorsport in the UK is shaped by people: passionate volunteers, seasoned competitors, dedicated officials and community voices who give their time because they care about the future of our sport. Our committees bring these perspectives together. Enthusiasts with lived experience across every discipline, whose role it is to understand how the sport feels at ground level and to help shape regulations that keep motorsport safe, fair and enjoyable for everyone.

The resulting National Competition Rules are powered by collaboration, driven by our committees. Ideas and proposals are explored, refined through open consultation, and strengthened by feedback from clubs, competitors, marshals and members. Before anything is approved, we debate and challenge each proposal, ensuring it supports the values at the heart of our community. Approved new or amended rules are then released at regular intervals throughout the year in the NCR.

This process is about building confidence, trust and clarity. It reflects our Vision 2030 commitment to simple, transparent and supportive governance.

Your voice matters, and it genuinely shapes the rules that guide us forward, together. To have your say and view the latest proposed regulations under consultation, **click here**.

The Specialist Committees for 2026 are:

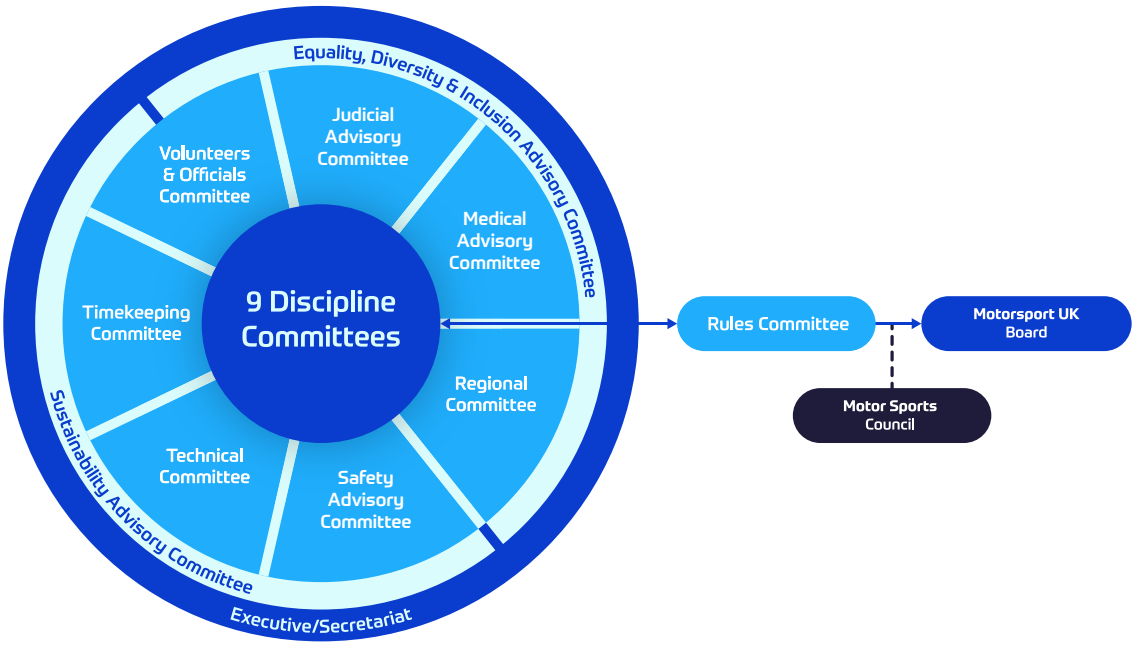

UK Licensed Venues

Hill Climb Venues

Barbon Manor
Bo'ness
Bouley Bay
Cairncastle
Craigantlet
Creg Willey's
Croft Hill
Cultra
Doune
Drumhorc Hills
Epynt
Fintray House
Forrestburn
Fort Tourgis
Garron Point
Goodwood Hill
Greve de L'Ecq
Gurston Down
Harewood
Le Grand Val
Lhergy Frissell
Loton Park
Mont Pinel
Petit Bot
Prescott Hill
Scammonden Dam
Shelsley Walsh
Spamount
The Sloc
Tregrehan
Val des Terres
Watergate Bay
Werrington Park
Westmount
Wiscombe Park

Sprint Venues

Abingdon Airfield
Aintree
Blyton Park
Boyndie Drome
Clay Pigeon Raceway
Coventry Ring Road
Curborough
Debden Airfield
Eelmoor Driver Training Area
Enniskillen Airport
Five Mile Road
Fort Corblets
Goodwood Motor Circuit
Hethel - Lotus Test Track
Kames Motorsport Complex
Kirkistown
Littleferry
Llandow
Mercedes Benz-World
North Weald Airfield
Nutts Corner
Portreath
St Saviour's Reservoir
Three Sisters
Vazon Coast Road
Victoria Avenue
Watergate Bay

Note: Sprint events are also held at some Race Circuits

Venues licensed by Motorsport UK at time of publication.

Kart Venues

Barton Stacey
Bayford Meadows
Bishopscourt
Blackbushe
Boyndie Drome
Buckmore Park
Clay Pigeon Raceway
Crail Raceway
Darley Moor
Dunkeswell
Ellough Park
Fulbeck
Glan-Y-Gors
Hooton Park
Kimbolton
Kirkistown
Larkhall
Littleferry
Llandow
Lydd Kart Circuit
Nutts Corner
P.F. International
Portstewart
Rissington
Rowrah
Rye House
Shenington
Sorel
St. Sampson's
Three Sisters
Warden Law
Whilton Mill
Wombwell Sports Stadium

Race Venues

Anglesey
Bishopscourt National
Brands Hatch
Cadwell Park
Castle Combe
Croft
Donington Park
Goodwood Motor Circuit
Kirkistown
Knockhill
Lydden Hill
Mallory Park
Oulton Park
Pembrey
Silverstone
Snetterton
Thruxton

Rallycross Venues

Blyton Park

Rallycross tracks are also located at the following Race Circuits:

Knockhill
Lydden Hill
Pembrey

Drag Venues

Santa Pod

British Championships

British Autotest Championship
Championship Co-Ordinator: Simon Fowler
Website: motorsportuk.org/events/british-championships

British Car Trial Championship
Championship Co-Ordinator: Simon Fowler
Website: motorsportuk.org/events/british-championships

British Cross Country Championship
Championship Co-Ordinator: Jon Aston
Website: crosscountryuk.org

British Drag Racing Championship
Championship Co-Ordinator: Ian Marshall
Website: britishdragracing.org

British F4 Championship
Championship Co-Ordinator: Eve Lake-Grange
Website: fiaformula4.com

British F4 Esports Championship
Championship Co-Ordinator: Paul Crawford
Website: fiaformula4.com/esports

British GT Championship
Championship Co-Ordinator: Lauren Granville
Website: britishgt.com

British Hill Climb Championship & Hill Climb Leaders Championship
Championship Co-Ordinator: Tim Wilson
Website: britishhillclimb.co.uk

British Historic Rally Championship
Championship Co-Ordinator: Colin Heppenstall
Website: racrmc.org/british-historic-rally-championship/index

British Indoor Karting Championship
Championship Co-Ordinator: TeamSport
Website: bikc.co.uk

British Kart Championship
Championship Co-Ordinator: Louise Brown
Website: britishkartchampionships.org

British Rally Championship
Championship Co-Ordinator: Reece Tarren
Website: britishrallychampionship.co.uk

British Sporting Trials Championship
Championship Co-Ordinator: Simon Fowler
Website: motorsportuk.org/events/british-championships

British Sprint Championship and Sprint Leaders Championship
Championship Co-Ordinator: Peter Howgate
Website: britishsprint.org

British Touring Car Championship
Championship Co-Ordinator: Stuart Murray
Website: btcc.net

British Truck Racing Championship
Championship Co-Ordinator: Gordon Snell
Website: barc.net

Chapter 1

General Governance and Establishment

MOTORSPORT UK ASSOCIATION LIMITED trading as Motorsport UK ('ASN') 2026 NATIONAL COMPETITION RULES ('NCR')

Defined and abbreviated Terms appear in bold text. Hyperlinks appear in blue text. All nomenclature and definitions are found in **App.1 to this Chapter**.

The **ASN Policies** and **Codes of Conduct** referred to are hyperlinked to the **ASN** website **www.motorsportuk.org** at the end of this Chapter

The **NCR** comprises 21 Chapters each where relevant supported by numbered Appendices.

CHAPTER 1

This Chapter is separated into the following appendices:

App.1 Definitions and Nomenclature

App.2 Competiton Fees

App.3 Insurance

App.4 Competing Abroad

1. General Governance and Establishment

1.1. The **"FIA"** is the sole international authority entitled to make and enforce rules and regulations for the control of automobile **"Competition"s** to be exercised in a fair and equitable manner. To achieve that purpose the **"FIA"** has created the **"Code"**.

1.2. The **ASN** is a founder member of the **"FIA"** recognised by **"FIA"** as the sole national sporting authority for the United Kingdom and is bound to uphold the fair and equitable application of the **"Code"**. Under the authority of that recognition and the **"Code"** the **ASN** declares its authority and has made these **National Competition Rules ('NCR')** to be referred to in all **Official Documents** as **'NCR'**.

1.3. The **ASN** is also authorised by United Kingdom statute and regulations to organise and authorise **"Competition"s** for **Motor Vehicles** in the **British Isles**.

1.4. The exclusive right to alter vary amend or provide exemption from the **NCR** by such means as it shall determine is vested in the **ASN**. Such variations shall be published by the **ASN** in the means most expedient to the **ASN** and shall have **Regulatory** effect as stated by the **ASN**.

1.5. The style and get up '**Motorsport UK**' is the exclusive property of the **ASN** and shall not be used howsoever without its prior written authority.

1.6. The **NCR** apply to all **Events** and **Participants** as well as to **Licence Holders** as to their general societal conduct and when the **Licence** or any **"Registration"** granted by the **ASN** is produced to the **Organiser** of an **Activity** who relies in any way on that **Licence** for the purposes of the **Activity** and or admission to a **Venue**.

1.7. Any **Licence** or **"Registration"** may be withdrawn by the **ASN** in its entire discretion whether for the purposes of investigation of breach of the **NCR** or any related complaint or permanently under the **ASN** inherent authority. Any withdrawal by the **ASN** shall state reasons.

1.8. A **Steward** appointed by the **ASN** to oversee an **"Event"** has the authority to suspend any **Licence** or **"Registration"** temporarily in accordance with the **Judicial Regulations** and any related **Practice Directions**.

1.9. The **ASN** is empowered as of right to grant exemption from the **NCR** in particular cases and to decide any question on interpretation of the **NCR** and may in its discretion also refer such question to the **National Court** whose decision shall then be final and binding subject only to any **Right of Review**. Such authority vests automatically in the **National Court** when it is seized of any matter under the **Judicial Regulations** or the **National Court Practice Direction(s)**. Subject as stated the **Decisions** of the **National Court** do not generally create any precedent regarding the nature of the subject matter before it.

1.10. An interpretation of the **NCR** made by the **ASN** and not referred by it to the **National Court** shall be definitive of the issue subject only to any relevant **Decision of the Court** under a properly admitted **Appeal** or **Inquiry** under the **Judicial Regulations** and or **National Court Practice Direction(s)**.

1.11. Motorsport is gender neutral and all **Official Documents** must conform to such principles.

1.12. Any **International Event** occurring in the territory of the **ASN** shall be organised in accordance with the **"Code"**.

1.13. For the purposes of stability of the **NCR** all amendments except for the enablement of sporting fairness or exemption from the **NCR** or to create compatibility with the **"Code"** or correction of error or urgent safety shall be effective 1st January normally on 6 months' notice for sporting matters and 12 months for technical matters. It is the prerogative of the **ASN Board** to determine the date of applicability of any new or amended **Regulation**.

1.14. An application for any **ASN** Licence or Registration and any **Entry** to an **Event** is a declaration by that **Applicant** of submission to and conformity with the **NCR** and any applicable **Official Documents** as well a contractual undertaking to exhaust all remedies under the **NCR** before howsoever bringing or pursuing any other right or remedy in any jurisdiction.

1.15. The holders of **International Licences** undertake to respect and uphold the **"Code"**.

1.16. All **Licence Holders** and **Registrants** submit to the binding final authority of the **ASN** or where applicable the **National Court** in respect of all matters arising out of or touching upon the **NCR**.

1.17. The **ASN** shall only grant authority to organise a **Championship** to an entity acceptable to the **ASN** or authority to hold an **Event** to **Recognised Clubs**.

1.18. All **Events** shall be organised and participated in with full respect to the **NCR** and where applicable the **"Code"** and all **ASN Policies** and **Codes of Conduct** in force at the date of the **Event**.

1.19. The **ASN Policies** and **Codes of Conduct** as published from time to time are of regulatory value to enforce the right of **Participants** to take part in motorsport under principles of personal safety and respect for the individual without any form of abuse including the safeguarding and protection of children and vulnerable adults the principles of **Equality Diversity** and **Inclusion** and respect for property and the environment.

1.20. The **ASN** shall appoint a **Disciplinary Officer** whose function shall be to advise on perceived breaches of these **NCR** and to represent the **ASN** in all such matters whether directly or by the appointment of independent representation and whether before the **National Court** or otherwise.

1.21. Notices under the **NCR** shall be sent to **ASN** at its current **Registered Office** address and communications sent by the **ASN** to **Participants** shall be sent by the most expedient means to the last address or e address provided to the **ASN**.

1.22. The **NCR**s including any interpretations of them come into force on the date of publication of them or as amended by the **ASN** and remain in force until amended under **Art.1.4** or **1.9** or **1.10** or **1.13** above or replaced or in the case of any exemption granted by the **ASN**.

1.23. The **ASN** pursuant to the **"Code"** has established and funds the **ASN National Court** however the **Court** is independent of the **ASN** and members of the **Court** shall not be executives of the **ASN** nor have been howsoever involved in any subject matter before the **Court**.

2. Insurance

2.1. Motorsport and related activities under an **ASN Permit** or **ASN Certificate of Exemption** are insured under the **ASN Public Liability Master Policy**. Brief details of this insurance can be found at **App.3 to this Chapter**.

2.2. The **ASN** provides a **Personal Accident Policy** for the benefit of participants in **Permitted Events** and the brief details of this can also be found at **App.3 to this Chapter**.

3. ASN Policies and Codes of Conduct

3.1. The following Policies and **Codes of Conduct** are of regulatory value and any breach of them as well as any breach of the **NCR** may be subject to **Judicial** action as provided by the **Judicial Regulations** or of any action by the **ASN** under its inherent authority:

3.2. General conduct and obligations

3.3. Anti-Doping and Alcohol Policy

3.4. Safeguarding (see Art.6 below)

3.5. Discriminatory conduct

3.6. Health and Safety including medical requirements and obligations

3.7. **Environment**

3.8. Medical including concussion

3.9. Disability

3.10. **Equality Diversity** and **Inclusion**

3.11. **Race with Respect**

3.12. Data Protection Policy

3.13. Drones

4. Funding and Competition Fees

4.1. The work of the **ASN** and the cost of insurance premiums is in part funded by **Competition Fees**. The details of all **Competition Fees** including **Licences**, **Permits** and **Judicial** Fees for **Appeal**s, Protests and Fines are found at **App.2 to this Chapter**. **Competition Fees** are reviewed annually and effective from 1 January in each calendar year.

5. Competing abroad

5.1. Brief guidance in relation to competing abroad is provided at **App.4 to this Chapter**.

6. Safeguarding Policy

6.1. Everyone who takes part in motor sport is entitled to do so in a safe and enjoyable environment. All **Persons** whose activities are within the scope of these **Regulations** must follow the **ASN Safeguarding Policy** and **Guidelines** (as amended from time to time) and the provisions of this **Regulation**. All **Recognised Clubs** permitted to organise **Events** by the **ASN** must have a **Club Safeguarding Officer** licensed annually by the **ASN**. It is strongly recommended for all other **ASN Recognised Clubs** to have a nominated **Club Safeguarding Officer** (CSO) licensed annually by the **ASN**.

6.2. The **ASN** is committed to helping everyone in motor sport accept their responsibility to safeguard Children and Adults at Risk from harm and abuse. This **Regulation** and the **ASN Safeguarding Policy** and Guidelines applies to Persons involved in motor sport. All Persons participating in motor sport have a duty of care to safeguard the welfare of Children and Adults at Risk and prevent their abuse.

6.3. The **ASN** shall have jurisdiction to investigate any allegation of abuse of a Child or Adult at Risk, any breaches of the **ASN Safeguarding Policy** and Guidelines and/or any breach of this **Art.6** reported to it. Relevant information will be shared with statutory agencies in accordance with the **ASN's** legal obligations.

7. To become an **ASN Recognised Club**, a **Club** must have at least 25 members and its **Club** Rules must have been approved by the **ASN**. The names and addresses of the members must be supplied with the application. The **Club** must undertake to comply with the **NCR** and all other **Regulatory** requirements and guidance issued by the **ASN** and to pay an annual registration fee and all insurance and other charges and fees due under these **NCR** (and the **Appendices** thereto).

7.1. Applicants for first time **ASN Club** recognition must be a member of an **ASN** recognised **Regional Association**, which shall normally be the Regional Association local to the applicant **Club**. Applications will be notified by means of the **ASN** monthly publication or by an official announcement and are subject to objection within one month from other **Registered Clubs** before approval by the **ASN**.

7.2. Recognition will only be granted to those clubs where all the members are individuals. Groups, or Associations of Clubs (Recognised Groups) may be recognised in a separate category entitled to accept invitations to **Interclub Status Events** and to organise their own **Championships**. They are not permitted to accept invitations to **Clubman Status Events**, or to organise their own **Events**.

7.3. Regional Centres of Motor clubs which organise events are required to be recognised separately.

7.3.1 Each Centre shall pay a full registration fee and all other charges and fees due under these **NCR** (and the Appendices thereto) for the same facilities as a separate **Club**.

7.3.2 Recognised Regional Associations of Clubs are entitled to accept invitations to **Interclub** Status **Events** and to organise their own Regional **Championships**. They are not permitted to accept invitations to **Clubman Status Events**, or to organise their own **Events**.

7.4. The continued recognition of any **Recognised Club** or Regional Centre of Motor club or any other bodies recognised under shall be subject to the continuing approval of the **ASN** and also compliance with these **NCR** and payment of the Insurance Premiums due under Ch.1 App.3 and any other fees and charges due under these **NCR** (or the Appendices thereto).

8. Other Bodies

8.1. In addition to these **Recognised Clubs**, the **ASN** registers certain other **Clubs** and associations of **Clubs** or bodies as responsible organisations in the sphere of motor sport.

9. Right of Appeal

9.1. New applicants, and existing **Recognised Clubs** or Regional Centres of Motor Clubs refused recognition or continued recognition by the **ASN**, (Art.7.1 and Art.7.4 above) shall have a right of **Appeal** to the **National Court**. (See Chapter 1 App.2 the Fee).

Grid Connect

THE NEW WAY FOR DRIVERS & TEAMS TO CONNECT

GridConnect is a global platform where drivers can find drives, and teams can discover the right talent — matched by budget, category, and availability

SMART OPPORTUNITY SEARCH

Drivers can instantly find drives by:

- Budget
- Location
- Category (GT, Formula, Karting, Rally, etc.)
- Availability

No more scrolling through dozens of websites or random posts.

PROFESSIONAL DRIVER & TEAM PROFILES

Clean, structured profiles showing:

- Experience & results
- Budget range
- Preferred disciplines
- Media/photos
- Team requirements or driver availability

Makes it easy for both sides to evaluate each other quickly.

DIRECT DRIVER–TEAM CONNECTIONS

Teams can post drives; drivers can apply directly.
Messaging, applications, and replies happen in one place — not spread across DMs, emails, and WhatsApp.

GLOBAL MARKETPLACE VISIBILITY

Drivers can be discovered by teams worldwide. Teams gain access to a much larger, more diverse talent pool. No more relying only on contacts or local networks — GridConnect makes the sport global.

@gridconnect.app

www.gridconnect.app

CHAPTER 1 GENERAL GOVERNANCE AND ESTABLISHMENT

Appendix 1 - Definitions and Nomenclature

The following descriptions define key words and phrases referred to in the texts of the National Competition Rules. They may be amended or added to at any time.

Adequate Strength. The component concerned is of strength to fulfil the function for which it was intended.

Adult at Risk. means any adult who is at risk of, or experiencing abuse and/or neglect, and who is unable to protect themselves from harm due to their care and support needs.

Advertisement. Any lettering, additional trademark or symbol appearing on a **Vehicle**, including any border or background that is distinguishable from the underlying surface on which it appears.

Aerodynamic Device. Any device or part of a **Vehicle** (excepting normal and conventional styled bodywork) that has a principal effect of creating aerodynamic downforce. Within this definition should be included forward facing gaps or openings in the bodywork but will not include spoilers in the form of raised surfaces continuous with the body surface and not wider than the body surface. It is not permitted to mount an aerodynamic device on unsprung parts of the **Vehicle**.

Appeal. A challenge lodged pursuant to Chapter 2 by an **Entrant** or **Competitor** within specified time limits and made against a decision, act or omission made by an **Official** of an **Event**. An **Appeal Scale Fee** is payable to the **ASN** in accordance with Chapter 1 App.2. In the case of an **Appeal** being made against a decision, the **Entrant** or **Competitor** involved must have been either:

a. The party involved in the incident giving rise to the decision, or

b. The party who lodged the **Protest** which resulted in the decision, or

c. The party against whom a **Penalty** has been imposed.

Appointments Panel. Depending on the context means either the Nominations and Appointments Committee of the **ASN** Board or a special **Appointments Panel** created by the **ASN**.

Approved Formulae. A set of **Regulations**, approved by the **ASN**, providing the parameters for a **Vehicle** to be used in a specific **Competition** or **Series** of **Competitions**.

ASN. A National **Automobile Club** or other national body recognised by the **FIA** or the **CIK-FIA** as sole holder of sporting power in a country.

ASN Approval Sticker. A sticker designated by the **ASN** as indicating approval of a **Vehicle** or any component thereof or in respect of an item of Safety Equipment or **Competitor** Personal Safety Equipment.

ASN Approved. Any person or item that has been approved in writing by the **ASN** as being in conformity with the **NCR** or any **Guidance** or Policy issued by or on behalf of the **ASN**.

ASN Safeguarding Officer. A person designated by the **ASN** to manage safeguarding at the **ASN**.

ASN Safeguarding Policy. The **ASN Safeguarding Policy**, **Guidance** and **Procedures** (as amended from time to time) or any other successor policy and procedure for the safeguarding of **Child**ren and **Vulnerable People**. The **ASN Safeguarding Policy** is binding on all those **Persons** involved in motor sport.

ASN Website. **https://www.motorsportuk.org/**

Authorised Foreign Participation. According to the context either Permission for the holder of an **ASN Licence** to participate in an **Event** outside the **ASN** jurisdiction or for the holder of a foreign **ASN Licence** to participate in an **Event** within the **ASN** jurisdiction.

Autocross. A speed **Event** on a closed **Circuit** with a grass or unsealed surface.

Automobile / Car / Vehicle. **Land Vehicle** running on at least four non-aligned complete wheels, of which at least two are for steering and at least two for propulsion.

By agreement with the Auto-Cycle Union includes pre-1941 three-wheel **Vehicles** in all **Event**s and such **Vehicles** of any age in **Touring Assemblies**.

Autotest. A **Competition** for **Vehicles** in which marking during the **Event** is based solely on a **Competitor's** performance in manoeuvring **Tests**, and defined as:

a. **Autotest**. These **Tests** may include spin or handbrake turns, stop astride lines, and some reversing, and may be at one or more sites. A **Passenger** is not allowed. (see Chapter 19);

b. **Production Car Autotest**. A **Competition** for **Production Cars** capable of being taxed and MOT'd. These **Tests** may include a limited number of spin turns or, handbrake turns, stop astride lines, or reversing, and may be at one or more sites. A **Passenger** must be carried in the front seat.

c. **AutoSOLO**. For **Road Going Vehicle**, with **Tests** held on a sealed surface. These **Tests** shall be all forward and non- stop, without requiring any spin or handbrake turns, and may be at one or more sites. A **Passenger** may be carried in the front seat.

d. **Evening Autotest/AutoSOLO**. A **Clubmans** status **Event** designed for Clubs to organise early evening, mid- week during the Summer months. The **Official Documents** must specify the type of **Event** (a, b or c above) which must comply with the specific requirements for each **Event** type (see Chapter 19). An **Evening Autotest/AutoSOLO** may include **Classes** for different **Autotest Event** types. Separate awards must be issued for each type.

Auxiliary Battery. The **Auxiliary Battery** supplies energy for signalling, lighting or communication and optionally to the electrical equipment used for the IC engine.

Ballast. Non-functional material added to increase **Vehicle** weight. Units of **Ballast** are to be strong and unitary blocks, fixed by means of tools with the possibility of affixing seals and placed on the floor of the cockpit or the luggage compartment, visible and sealed by the **Scrutineers**.

Kart Ballast material added (where permitted) to a **Kart** to achieve a regulated minimum weight.

Bambino Kart Event. Pre-**Race** training for 6 and 7 year olds, which can only be held on **Circuits** specifically licensed for Bambino. **Drivers** must hold a **Kart Clubman Licence**, which they can obtain from their 6th birthday and may continue in Bambino until their 8th birthday. Full details and criteria contained within the **Karting UK Yearbook**.

Barred. A restriction imposed on an individual's involvement in motor sport on such terms as may be determined by the **ASN**.

Bodyshell. The major structural part of the **Vehicle** constructed of all parts that are permanently attached (by welding, brazing, riveting, bonding, etc.) around which are assembled the mechanical components. Panels that are attached by means of removable fasteners are not considered to be part of the bodyshell.

Bodywork. All entirely sprung parts of the **Vehicle** in contact with the external air stream, except the rollover structures and the parts definitely associated with the mechanical functioning of the engine, transmission and running gear. Airboxes and radiators are considered to be part of the bodywork. Exterior rear-view mirrors are not considered to be part of the bodywork. **Bodywork** is differentiated as follows:

a. Completely closed bodywork.

b. Completely open bodywork

c. Convertible bodywork with the hood in either supple or rigid (hardtop) material.

Brake light. Rear facing red light(s) each of 750 sq mm minimum surface area equipped with a 21W bulb or of equal luminosity directly operated without delay by application of the **Vehicle** brakes.

Bulkhead. A partition separating one **Vehicle** compartment from another.

Cadet Marshal. A **Cadet Marshal** grade can be issued to **Marshals** between the dates of their 11th birthday and their 16th birthday and whose details are made available to the **ASN** for registration purposes. They may perform a limited range of duties appropriate to the grade and type of **Event**, in line with **ASN Guidelines**.

In order to ensure compliance with the **ASN Safeguarding Policy and Guidelines**, all **Event**s using **Cadet Marshals** are required to include in the **Regulations** for the **Event** contact details of an **ASN Safeguarding Officer**.

Catalytic Converter. A device designed and used to reduce the quantity of toxic emissions produced by an internal combustion engine.

Championship. An **Event** or **Series** of **Event**s organised for the purpose of establishing the right to an individual or collective title. Recognised by the **ASN** by the grant of a **Championship Permit** where applicable and governed by the provisions of the **Championship Regulations** and these **NCR**

Championship Co-ordinator. The person or entity appointed by the **Championship Permit Holder** or the **Championship Rights Holder** with responsibilities regulated in **Chapter 5 Part B Appendix 4**. The **Promoter** cannot be the **Championship Co-ordinator**.

Championship Permit. Authority granted by the **ASN** to conduct a **Championship**.

Championship Permit Holder. the Organiser holding the **Championship Permit** granted by the **ASN**

Championship Regulations. The **Official** Document comprising **Regulations** governing the terms and conduct of a **Championship** published by the **Championship Permit Holder**.

Championship Rights Holder. The **Promoter** or other person or entity recognised by the **ASN** as having the intellectual and other property rights in a **Championship** and who has subject to the consent of the **ASN** the right to designate the **Championship Permit Holder**

Chassis. The overall structure of the **Vehicle** around which are assembled the mechanical components and the bodywork.

Child. A person under the age of eighteen years as defined by the **Child**ren Act 1989 and the term "**Child**ren" means more than one **Child**.

CIK-FIA (Commision Internationale de Karting). The **FIA** Commission responsible for Karting.

Circuit. The whole area used for an **Event** under the **Control** of the **Organising Club** and / or a **Circuit** owner.

Class. A division of **Vehicles** by their engine capacity or any other means of distinction.

Club Membership Card. A physical or digital document acknowledging that the holder is a member of the issuing organisation whether permanently or for a fixed term.

Club Safeguarding Officer. A person designated to manage safeguarding at a club, association or **Organising Club**.

Clubman Event. An **Event** confined to members of the sole **Organising Club**, and, by invitation, to members of a limited number of other clubs.

Clubmans Cars. Open **Sports Racing Car** constructed in accordance with the technical **Regulations** published by The Clubmans Register Ltd.

Clubsport Event. A **Competition** involving motor **Vehicles**, but not necessarily exclusively and where the emphasis is on the social element rather than any outright performance of the **Vehicle** and of an **Event** type prescribed by the **NCR**.

Co-Driver. The second member of each double crew competing in the relevant **Event**.

Commercial. Any objective or undertaking or enterprise concerned with making money or related to the buying and selling of goods or services.

Commercial Rally Recovery Supplier. Any supplier of recovery services not licensed by the **ASN** in accordance with **Chapter 11**. A registered limited company that specialises in the recovery operations of **Vehicles** certified to PAS43:2018 and is a member of one of the following associations: AVRO or IVR or RRRA. **Commercial Recovery Suppliers** are not covered by the **ASN** master policy and must have Public and Employers Liability insurance cover to a minimum of £5M.

Commitment Guarantee (Race). A written guarantee in the form required by the **ASN** for any proposed **Championship** that has not previously run as a **Series**. This is additional to any **Championship Permit** Fee and if the **Championship** runs as specified during the first three years this Guarantee will be discharged at the end of the third year.

If the **Championship** fails to take place or ceases prematurely the **Commitment Guarantee** will be enforceable.

Any commercial liabilities arising from the **Championship** during these first three years, are the responsibility of the **Club** / **Championship Organisers**. Any forfeit **Guaranteed** sum received by the **ASN** will be paid to a registered charity

nominated by the **ASN** or used to fund training or prizes.

Competition. That part of an **Event** that is given a competitive nature by the publication of results. It must be completed by the end of the **Event**. An individual specific **Event**, such as a gymkhana or treasure hunt, shall not be a **Competition** for the purpose of these **Regulations** if, on being informed in writing of the details of the proposed **Event**, the **ASN** has waived in writing the necessity for an **Organising Permit** and the **Event** takes place in accordance with such details.

Competitor. A person or body whose **Entry** is accepted for or who competes in any **Event** whatsoever, whether as **Entrant**, **Driver**, **Co-Driver**, **Navigator** or **Passenger**.

Competitor's Licence Record. The record of the **Competitor's Competition** licence history, including any **Penalty** points and other judicial matters protected by GDPR.

Competition Numbers. Numbers displayed on **Vehicles** in **Competition** for identification purposes.

Composite. Material formed from several distinct components, the association of which provides the whole with properties which none of the components taken separately possess.

Control or Check. Any point that **Competitors** must visit during an **Event**. A **Control** will be manned by **Officials**; a **Check** may or may not be manned. If the term **Time Control** is used this will imply that the **Competitor's** time of arrival at or departure from this point is recorded.

Control Fuel. **Fuel** supplied from a defined source with chemical composition monitored in a manner defined by **ASN Regulations**.

Control Line. The line by reference to which a **Vehicle** is timed or its performance in a **Competition** is determined.

Course. The **Track**, plus all run-off areas, up to and including safety barriers, fences and walls.

Crew. the combination of **Driver** and any permitted **Co-Driver**, **Navigator** or **Passenger**.

Cross Country Junior Trials Vehicle. A two-wheel drive **Vehicle** adapted from a front-engined lawn or garden tractor with the cutter deck and associated ancillaries removed, and fitted with a four stroke petrol or diesel vertical crankshaft engine of the Industrial and **Commercial** restricted type.

Cross Country Vehicle. A **Vehicle** that has a manufacturers' design function to traverse arduous cross-country terrain.

Cross Country Event. An **Event** intended only for **Cross Country Vehicles**. These may be defined as follows:

a. **Competitive Safari**. A timed **Event** taking place on private ground that will be laid out over one or more **Course**s and at one **Venue** only.

b. **Cross Country Orienteering**. An **Event** involving navigating and driving a **Vehicle** to an objective, or **Series** of objectives.

c. **Cross Country Vehicle Timed Trial**. A **Trial** taking place on one area of private ground in which the marking during the **Event** is mainly based upon the ability of **Competitors** to climb hills or traverse difficult sections non-stop, but where the results are decided predominantly by the time taken to traverse those sections.

d. **Cross Country Vehicle Trial**. A **Trial** in which the marking for the **Event** is mainly based upon the ability of **Competitors** to climb hills or traverse difficult sections non-stop, and in which the mileage upon a **Public Highway** does not exceed 50 miles.

e. **Hill Rally.** An **Event** of which the main portion of the route is cross country, and in which the marking for maintaining a set time schedule shall form a substantial part of the **Competition**. A **Hill Rally** may include **Tests** or **Observed Sections**.

f. **Point to Point**. An **Event** the object of which is for a team of **Vehicles** to seek and visit points spread out on open ground. The points must be accessible by **Vehicle**(s) and it may require team effort to reach and pass through the points. **Public Highway**s must not be used.

g. **Team Recovery**. An **Event** the object of which is for a team of **Vehicles**, by self-recovery or team effort, to proceed through an **Observed Section** in the shortest possible time.

h. **Winch Recovery.** An **Event** the aim of which is to move an object (normally a demobilised **Vehicle**)

by winching through a gate and along a specified **Course**.

i. **Promotional Event**. A non-competitive **Event** designed solely to enable participants to experience driving their **Vehicles** off-road, and to introduce them to organised cross country driving.

j. **Challenge Event**. An **Event** the aim of which is for **Competitors** to manoeuvre their **Vehicles** to a remote location by means of driving, towing and or winching, or any combination thereof and where proof of visiting that location is by way of the scorecard, which shall be permanently attached to the **Vehicle**, being officially marked.

k. **Cross Country Driving Test**. A Cross Country **Competition** in which marking during the **Event** is based solely on a **Competitor's** performance in manoeuvring **Tests**. These **Tests** may be at one or more sites on private property and be on unsealed surfaces and intended to encourage newcomers to the sport.

Cylinder Volume. Volume V generated in cylinder (or cylinders) of an **IC Engine** by the upward or downward movement of the piston(s).

$V = 0.7854 \times b^2 \times s \times n$, where:

b = bore

s = stroke

n = number of cylinders

Data Acquisition. The collection and storage of data on a **Vehicle**, also termed "data logging". Data loggers acquire and store data until the data is downloaded.

For **Kart** applications, data loggers are acceptable, provided there is no electrical connection between the data logger and the ignition system of the **Kart** other than to an insulated section of the high-tension (HT) lead. Any lap-timing device used as part of the data logger must adhere to the lap-timing section of these definitions.

In **Karting** terms, a data logger is a combination of an electronic memory and a **Series** of sensors and looms, usually allied to a beacon detector for lap-timing. Data is usually viewable on a software program on a computer after download from the memory. A data logger may have **Driver** instrumentation connected to it for on track display of information to the **Driver**.

DBS. The Disclosure and Barring Service.

DBS Disclosure. A **DBS Disclosure** issued by the **DBS** including any renewal disclosures.

Decision. depending on the context a **Decision** in writing made by any of the **ASN**, an **Event Official** or the **National Court**.

Delay Allowance. A period of time permitted within a **Competition** which does not attract a **Penalty**.

Disqualification. **Disqualification** forbids the person concerned to take part in any particular **Competition**, or in several sporting **Competitions** of the same **Event**. **Disqualification** may be applied in retrospect, by the deletion of any result in any **Competition**.

Drag Race. A **Race** between two **Vehicles** over a flat and straight **Course** of 440yds, with a minimum braking distance of 800yds, and a minimum width of 50ft.

Drag Racing Vehicle. A **Vehicle** designed and prepared to obtain maximum acceleration over a straight **Course**.

Driver. A person nominated as the **Driver** of a **Vehicle** in any **Event**.

Driver Instrumentation. The medium by which information is displayed to the **Driver** while the **Vehicle** is on the **Circuit** or in the **Pits** / **Paddock**. **Driver** instrumentation can be driven either by stand-alone sensors or driven by a data logger. Sensors to drive the instrumentation are considered as part of the **Driver** instrumentation.

For **Karting** applications **Driver** instrumentation is permitted, whether the display is stand-alone or used in conjunction with a data logger.

Duration of Event. An **Event** is considered to have begun as from the time scheduled for the beginning of administrative checking and / or **Scrutineering** and shall include **Practice** and **Qualifying** and the **Competition** itself. It shall end upon

the expiry of the time limit for **Protests** or **Appeals**, or the conclusion of any **Hearings**.

Electrical isolation switch. A general **Circuit** breaker which cuts all electrical **Circuits** (battery, alternator or dynamo, lights, horn ignition, electrical **Controls**, etc.), except for those that operate fire extinguisher, and must also stop the engine.

Electric Vehicle. **Vehicles** which solely use electricity stored on board and which are not necessarily or essentially propelled by the conversion of solar energy.

Enclosure. An area of land within an **Event Venue** which is enclosed and to which access is denied or is restricted to a **Class** of person or **Vehicle**. The **Enclosure** may be demarcated by barriers or fences of a permanent or temporary nature and should carry warning signs.

Endurance Kart Event. A **Kart Race** of a minimum of 60 minutes duration, where the need to refuel and / or make **Drivers** stops, or changes, is an integral part of the **Race**. **Drivers** must have reached their 16th birthday. A group of licensed **Drivers** may be referred to collectively by their team name without the requirement to hold an **Entrants Licence**.

There are two types of Endurance **Kart Events** and these require different licence grades, namely:

a. For engines which do not exceed 15hp in total per **Kart Drivers** must hold a minimum of a **Kart Clubman Licence**.

b. For engines exceeding 15hp in total per **Kart Drivers** must hold a minimum of a **Kart Interclub** (Novice) licence.

Endurance Race. A **Race** scheduled to have a minimum of 90 minutes duration, with mandatory refuelling and / or **Driver** stops and / or **Driver** changes, as an integral part of the **Race**.

Entrant. The person or body responsible for making an **Entry** into a **Competition** and responsible for all matters pertaining to that **Entry**.

Entry. The act of a **Competitor** or **Entrant** entering a **Permitted Event** or a **Championship** and which thereby creates a contract of participation between those parties subject to the rights vested under the **NCR** respectively in the **Organisers** and **Competitors**. An **Entry** must made in the manner specified by the Organiser and must be accompanied by the applicable fee(s) in accordance with the **Organiser's** instructions.

Environmental Spill Kits. For use in managing spills of automotive fluids, lubricating oils and fluids, gasoline, coolant additives, hydraulic oil etc. All kits to include adequate number of disposal bags for collection of used materials. Used **Spill Kit** materials to be disposed of in accordance with **National** and / or Local Authority Guidelines.

a. **Large Spill Kit**
Absorbent pads and/or granular absorbent material capable of dealing with spillages up to 14 litres capacity.

b. **Medium Spill Kit**
Absorbent pads and/or granular absorbent material capable of dealing with spillages up to 7 litres capacity.

c. **Small Spill Kit**
Absorbent pads and/or granular absorbent material capable of dealing with spillages up to 1.25 litres capacity.

Event. Any motorsport activity under the jurisdiction of the **ASN** and which has been granted a **Permit** by the **ASN** or has been confirmed by the **ASN** as being exempt from the requirements of being granted a **Permit** under these **NCR**.

Event Control. The location specified in the **Official Documents** from which the **Event** will be **Control**led.

Excluded. A person or body shall be said to be **Excluded** when permanently forbidden to take part in any **Event** whatsoever. **Exclusion** is of international effect throughout the territories of the **FIA** and is notified to the **FIA** and published on the relevant public facing **ASN** and **FIA Registers**.

FIA. Federation Internationale de l' **Automobile** being the world governing body of motorsport.

Fees. A contractual obligation to pay monies specified within or by virtue of these **NCR**

FIA International Sporting Code (‘Code’). The **Regulations** of the **FIA** governing world motorsport and International **Event**s.

Fines. A financial **Penalty** imposed by or by virtue of these **NCR** and being a contractual obligation to pay to the **ASN** or such other body as specified in any **Official** Document. **Fines** payable to the **ASN** will be enforced as a contract debt.

Finish Line. The last **Control Line** on a **Course**.

Forced Induction. Any device capable of augmenting atmospheric pressure to increase the induction of air or **Fuel** / air mixture into the combustion chamber (Superchargers, Turbochargers etc.). Any means of artificially reducing induction air temperature (eg packing with solid CO2 etc.) is prohibited. Ram effects entirely due to the forward motion of the **Vehicle** or tuning of induction or exhaust pipe length are not included within this definition.

Force Majeure. Unexpected circumstances beyond the reasonable **Control** of the parties involved including by way of example only (and subject to such matters being beyond the reasonable **Control** of the party concerned) pandemic industrial action fire flood accidents war riots insurrection civil disturbance acts of government governmental **Regulations** adverse weather conditions terrorism or threat of terrorist act.

Fuel (see Permitted Fuel). All substances fed into the combustion chambers of an **IC Engine** of a **Competition Vehicle** excepting only:

a. Atmospheric air and water vapour contained naturally therein.

b. Lubricating oil exceeding in viscosity 5 cSt at 100°C.

Fuel pump isolation system. A switch / device that stops the electrical flow to an electric fuel pump to cut the supply of fuel to the engine.

Grand Touring Car (GT). An open or closed **Vehicle** which has no more than one door on each side and a minimum of two seats situated one on each side of the longitudinal centre line of the **Vehicle**; these two seats must be crossed by the same transversal plane. The **Vehicle** must be able to be used perfectly legally on the open road and adapted for Racing on **Circuits** or closed **Course**s.

Ground Clearance. The clearance between the ground and the lowest part of the bodywork, or of the suspended part of the **Vehicle** in normal trim with the **Driver** aboard.

Guardian. See: **Parent / Guardian**

Guarantor. In the context of the **NCR** a person or legal entity who has provided a written assurance or pledge in favour of the **ASN**.

Gymkhana. An **Event** held wholly on private ground and in which no **Test** is determined solely by the speed of the competing **Vehicle**, or by the skill of the **Driver** in **Control**ling the **Vehicle**, and in which if there are to be timed **Tests**, there will be at least an equal number of untimed **Tests**. No **Test** may be timed to less than five seconds.

Handicap. A method laid down in the **Official Documents** for the purpose of equalising the **Competition**.

Hard Top. An accessory manufactured in rigid material used in place of or to replace collapsible fabric cockpit hoods on open **Vehicles**. When a hard top is fitted to a **Vehicle** (even temporarily) the **Vehicle** is then defined as ‘closed’ and must have a rear window installed, unless otherwise stated in **Official Documents**.

Head Restraints. A device permanently fixed to or a design feature of the seat of a **Competition Vehicle** and intended to restrain the rearward deflection of the occupant’s head and neck.

High Speed Trial. A **Competition** run on a **Circuit** in which **Competitors** are required to maintain a minimum speed for a specified time or distance, or cover a minimum distance in a specified time, and may or may not benefit from improving upon the minimum specified. Deemed to be a **Race** and subject to the appropriate conditions.

Historic Motorsport Competitions. under a set of rules that seek to preserve the specification of their period and prevent modifications of performance and behaviour which could arise through the application of modern technology.

Holder of Records. The **Driver** or **Drivers** who were driving the **Vehicle** when the **Record** was achieved.

Hot Lap Challenge. A **Hot Lap Challenge** is run over a number of sessions to determine the **Competitor** (in **Class**) completing the fastest lap time. **Drivers** are not competing against each other but against the clock and in a manner equivalent to a timed qualifying session. By display of their headlights **Drivers** indicate they are attempting their flying lap (hot lap).

Overtaking should only be carried out on the left.

Hybrid Vehicle. A **Vehicle** that uses two or more distinct power sources to propel the **Vehicle**.

IC Engine. An internal combustion engine

Identical Cars. **Cars** belonging to the same production **Series** and which have the same **Bodywork** (outside and inside), same mechanical components and same **Chassis** (even though this **Chassis** may be an integral part of the **Bodywork** in the case of a monocoque or unitary construction).

Ignition cut-off. A switch / device which stops the electrical flow to the **Vehicle** ignition system and stops the engine.

Incident. An unintended occurrence during an **Event**.

Interclub Event. An **Event** in which the **Competitors** or **Drivers** who take part have to comply with particular conditions of eligibility for instance:

a. Membership of an **Invited Club** or **Championship**.

b. A **Competition** confined to **Vehicles** of a particular make.

International Event. An **Event** is International when it is Permitted as such and entered on the **FIA** International Calendar and is run to the provisions of the **Code** and open to **Competitors** and **Drivers** of all **ASN** nationalities.

International Record. The best performance accomplished in a determined **Class** or group. There are **International Records for Land Vehicles**, **Automobiles**, **Special Vehicles** and **Ground Effect Vehicles**.

Judge of Fact. A person appointed by **Organisers** and named in **Official Documents** as having responsibility to determine or decide on any factual occurrence in connection with a **Competition** and to report to the relevant **Event Official**.

Junior Autocross. A restricted **Autocross Class** held to permit young **Drivers** between the ages of 14-17 years of age to compete in **Autocross Events**.

Kart. A small four wheel racing **Vehicle** with a rigid frame and no suspension of the wheels. The engine(s) drive the rear wheels only and these rear wheels must be joined by a single piece rear axle with no differential action between them. The **Driver** will be seated with feet to the fore.

Kart Category. A category within which **Kart Classes** are recognised and may include defining the age, and in some cases weight, criteria of the **Competitor**.

Kart Class. A recognised division within a **Kart Category** defined by the engine or some other means.

Kart Clubman Event. A **Kart Clubman Event** is a **Kart Race Event** run primarily as **Entry** level **Karting**. Engines may not exceed 17hp for **Seniors** or 10hp for **Juniors**, in total per **Kart**. **Competitors** must hold a **Kart Clubman's Licence**, as a minimum

Kart Super K-X Event. see **Ch.18 Art.4.6**

Kart K-X Event. see **Ch.18 Art.4.7**

Kit Cars. A **Vehicle** in which the **Chassis** frame, body panels and other major components are manufactured and / or supplied from one manufacturer to which other specified components and parts are added / assembled to produce a complete **Vehicle**.

Land Vehicle, Automobile, Special Vehicle, Ground Effect Vehicle.

a. **Land Vehicle**. A locomotive device propelled by its own means, moving by constantly taking real

support on the earth's surface, of which the propulsion and steering are under the **Control** of a **Driver** aboard the **Vehicle**.

b. **Automobile**. See **Automobile** above.

c. **Special Vehicle**. **Vehicle** having at least four wheels not in line that is steered by at least two wheels and is propelled otherwise than through the wheels.

d. **Ground Effect Vehicle**. **Vehicle** that takes a bearing on the ground by the means of a pressurised air cushion, magnetised levitation or similar means.

Lap-Timing. For **Karting** applications, a trackside beacon emitting a continuous output of infra-red light is permitted for use in conjunction with a data logger or for stand-alone lap- timing purposes. The position of the trackside unit is either to be located outside of the safety barriers or to be approved by the **Officials** of the **Event**.

Licence. A certificate of registration issued either:

a. under the **Code** by an **ASN** to any person or body wishing to participate in **Competitions** held under the **Code**; the holder of such a licence is presumed to know and abide by the **Code** and these **Regulations**, or

b. by the **ASN** to any person participating in any other agreed activity under terms defined by the **ASN**.

Licence Number. The number on a licence and which may correspond with the Holder's **Licence Record**.

Licence Upgrade Card. A record whether physical or digital of **Event** results or relevant information to support a licence upgrade. A request for an upgrading signature has to be made by a **Competitor** to the **Organisers** and if the results of the **Event** show that the **Competitor's** performance was satisfactory, their **Upgrade Card** will be signed by the **Clerk of the Course** or the **ASN Steward** of the **Event** where applicable. In the case of **Kart Race**s only the **ASN Steward** of the **Event** is empowered to sign and only one signature per **Event** is permitted, (**Kart Endurance**, **Kart Clubman** or **Bambino Kart** signatures are not accepted to upgrade a **Kart Race Licence**). A maximum of two signatures may be obtained at a single **Car Race Event** or **Race Venue Karting Event**. In exceptional circumstances only documentary evidence such as printed official results sheets may be considered as proof of performance for upgrading.

Light Alloy. Any alloy containing more than 10% aluminium, magnesium or titanium.

Local Record. A **Record** established on a permanent or temporary **Track** approved by the **ASN** whatever the nationality of the **Competitor**.

Locomotive Device. A self-contained and powered device capable of moving from place to place.

Main Chassis Structure.

a. **Single seater racing cars** – the fully sprung structure of the **Vehicle** to which the suspension and / or spring loads are transmitted, extending longitudinally from the foremost front suspension mounting on the **Chassis** to the rearmost one at the rear.

b. **Other Vehicles** – the overall structure of the **Vehicle** around which are assembled the **Mechanical Components** and the **Bodywork**.

Marshals Pathway. The **ASN** accreditation and performance review process for the approval and grading of **Marshals**.

Mechanical Components. All those necessary for the propulsion, suspension, steering and braking as well as all accessories whether moving or not which are necessary for their normal working.

Methanol. See **Chapter 8 App.1**

Mile and Kilometre. For all conversions of English to Metric measurements and vice versa, the mile shall be taken as 1.609344 kilometres, and the kilometre shall be taken at 0.62137 of a mile.

Ministry of Defence. His Majesty's Government **Ministry of Defence**.

Misconduct. the general use of language (written or verbal), gesture and / or sign that is offensive, insulting, coarse, rude or abusive and might reasonably be expected or be perceived to be coarse or rude or to cause offense, humiliation or to be inappropriate, assault or threat of assault.

Model Year. This defines new or re-engineered **Vehicles** that are built to a specification intended for sale and use from the start of the year indicated. Example: **Vehicles** built in the last months of a year for the next season would be defined as new season **Vehicles** and would have to conform to **Regulations** applicable to the new season.

Modification. Any change in the design, material, shape, dimensions and/or surface finish of a component, except for basic manufacturing processes, normal wear and published service or repair **Procedures**.

Monocoque Chassis. A structure of metal and / or composite materials welded, riveted or bonded into a structure in which the skin carries all or most of the stresses imposed on that structure.

Motor Racing Championship Control Panel. A consultative body appointed from time to time by the **ASN** to discuss proposed **Race Championships** and to inform but not to make decisions.

Nationality. The nationality of a **Competitor** or **Driver** for the purpose of these **Regulations** shall, after the grant of a **Licence**, be deemed to be that of the **ASN** that last issued a **Licence**.

National Event. An **Event** open only to **Competitors** and **Drivers** holding an appropriate **National** or higher licence issued by the **ASN** or the holder of a **Licence** of acceptable grade issued by another **ASN** under the provisions of the **Code**.

National Court. The body with ultimate authority under the provisions of the **Code** and the **NCR** for the administration of justice in the territory of the **ASN**. The **National Court** is funded by but is independent of the **ASN**. No employee of the **ASN** may sit on the panels of the **National Court**.

National Record. A **Record** made within the territory of the **ASN** regardless of the **Nationality** of the **Competitor**.

Navigational Scatter Event. A navigational **Event** where there is no **Competition** on the **Public Highway** and which falls within the provisions of automatic authorisation under the **Motor Vehicles (Competition and Trials) Regulations** (where applicable). **Competitors** should be required to visit a number of points at random and no merit should be attached to visiting more than 75% of the points listed. The majority of the points should not be readily accessible without leaving the **Vehicle** and the **Vehicle** shall be an incidental means of transport between the various points.

Navigator. The second member of each **Crew** competing in **Rallies**, or other **Event**s, held entirely on the **Public Highway**.

Noise. Sound as measured by an **ASN** approved measuring device carrying a current Certificate of Conformity to a traceable standard,

Novice Cross Plate. A sticker applied to a **Competitor's Vehicle** as required by the **NCR** and indicating that the **Driver** is of limited experience.

Number Plate. The plate that would normally carry the registration number of the **Vehicle**, were it to be run on public roads. Size and shape to be in accordance with DVLA requirements or the requirements of the territory in which the **Vehicle** is registered for highway use by the government of that territory.

Observed Sections. Those parts of a competitive **Course** that the **Organisers** state shall be observed for regulatory compliance by **Competitors** and for the purposes of scoring points or penalties in the relevant **Competition**.

Official. A person having a designated role in connection with a **Permitted Event** and who may be either a volunteer or undertaking a remunerated function and who is recognised by the **ASN** and / or has been appointed by the **Organising Club** for the purposes of a **Permitted Event**.

Official Documents. Compulsory documents issued by the **Organisers** of a **Competition** with the object of laying down the details conditions and **Regulations** of that **Competition**. Includes **Championship Regulations**, **Event Regulations**, **Final Instructions**, Bulletins and all communications to **Competitors** regarding the organisation of an **Event** or a **Championship**.

Off-Road Racing. A **Race** on a grass or unsealed surface.

Organiser(s). The entity authorised by the **ASN** by **Organising Permit** ('**Permit**') or **Certificate of Exemption** to organise and hold a **Competition** and or **Event** and responsible for the acts and omissions of its appointed **Event Officials**.

Organising Club. A **Club** registered with and recognised by the **ASN** and responsible in all respects for the organisation of an **Event**.

Organising Permit. The documentary authority to organise and hold a **Competition**, granted solely by the **ASN**.

Original Equipment. See **Standard Part**.

Pace Notes. Any information (in any recorded form) relating to a **Special Stage**, that has not been provided to all **Competitors** by the **Organisers** of that **Event**. This excludes **Subjective Route Notes** and the use of commercially available maps.

Paddock. An area provided by the **Organisers** for the parking of **Competition** and support **Vehicles**, and for the purpose of servicing **Competition Vehicles**.

Parc Fermé. Any secure and / or identified area designated by and under the **Control** of the **Organisers** and **Officials** of an **Event** and into which any **Entrant** or **Competitor** must place the **Competition Vehicle** and / or associated items as well as and when directed by the **Organisers** or **Officials** including the route instructions of the **Event**. No persons may be present in **Parc Ferme** and no contact is permitted with the **Vehicles** in **Parc Ferme** unless explicitly stated in the **Official Documents** or at the direct invitation of the **Chief Scrutineer** or the **Championship Scrutineer** and under their supervision. Any breach of **Parc Fermé** conditions shall be a breach of these **NCR**, and the relevant penalty shall apply without consideration of whether any advantage has been gained.

Parent / Guardian. A person with legal responsibility for or the custody of a **Child** whether by birth, adoption or other legal means.

Passenger. A person, other than the **Driver**, permitted to be conveyed on a **Vehicle** during a **Competition**.

Penalty. A **Penalty** applied to a **Competitor** as provided by these **NCR**.

Period Defined Vehicles (Non-Rally).

Historic Vehicles. Cars which are either original **Competition** cars or cars built to exactly the same specification as models with national or international **Competition** history complying with the rules of the period.

A1 – (Veteran) **Cars** of a specification valid before 1 Jan 1905.

B1 – (Edwardian) **Cars** of a specification valid between 1 Jan 1905 and 31 Dec 1918.

C1 – (Vintage) **Cars** of a specification valid between 1 Jan 1919 and 31 Dec 1930.

D1 – (Post Vintage Thoroughbred) **Cars** of a specification valid between 1 Jan 1931 and 31 Dec 1946.

E1 – **Cars** of a specification valid between 1 Jan 1947 and 31 Dec 1961 (up to 31 Dec 1960 for single seater and two-seater racing cars).

F1 – **Cars** of a specification valid between 1 Jan 1962 and 31 Dec 1965 (from 1 Jan 1961 for single seater and two seater racing cars and up to 31 Dec 1966 for Formula 2).

G1 – **Cars** of a specification valid between 1 Jan 1966 (1 Jan 1964 for Formula 3) and 31 Dec 1971.

H1 – **Cars** of a specification valid between 1 Jan 1972 and 31 Dec 1976.

Non-Historic Vehicles. Non-Historic Vehicles built using period specification parts. The period will be defined by the specification date of the latest major component of the **Vehicle**. The major components being; the **Chassis**, **Bodywork** / **Bodyshell**, engine, transmission, brakes, **Suspension** and **Wheels**.

A2 – **Cars** of which the latest major component is of a specification valid before 1 Jan 1905.

B2 – **Cars** of which the latest major component is of a specification valid between 1 Jan 1905 and 31 Dec 1918.

C2 – **Cars** of which the latest major component is of a specification valid between 1 Jan 1919 and 31 Dec 1930.

D2 – **Cars** of which the latest major component is of a specification valid between 1 Jan 1931 and 31 Dec 1946.

E2 – **Cars** of which the latest major component is of a specification valid between 1 Jan 1947 and 31 Dec 1961 (up to 31 Dec 1960 for single seater and two-seater Racing **Cars**).

F2 – **Cars** of which the latest major component is of a specification valid between 1 Jan 1962 and 31 Dec 1965 (from 1 Jan 1961 for single seater and two-seater Racing **Cars** and up to 31 Dec 1966 for Formula 2).

G2 – **Cars** of which the latest major component is of a specification valid between 1 Jan 1966 (1 Jan 1964 for Formula 3) and 31 Dec 1971.

H2 – **Cars** of which the latest major component is of a specification valid between 1 Jan 1972 and 31 Dec 1976.

Period Defined Vehicles (Rally).

A **Vehicle** will be dated by the specification presented and not necessarily by the date of build or registration.

Historic Category 1 – **Cars** of a specification valid before 1 Jan 1968 that comply with **Chapter 13 App.15 Art.9.2.a** or **Chapter 13 App.17 Art.2.3.a.i**.

Historic Category 2 – **Cars** of a specification valid between 1 Jan 1968 and 31 Dec 1974 that comply with **Chapter 13 App.15 Art.9.2.b** or **Chapter 13 App.17 Art.2.3.a.ii**.

Historic Category 3 – **Cars** homologated in Groups 1, 2, 3 or 4 between 1 Jan 1975 and 31 Dec 1981 that comply with **Chapter 13 App.15 Art.9.2.c** or **Chapter 13 App.17 Art.2.3.a.iii**.

Historic Category 4a – **Cars** homologated in Groups A, N and B between 1 Jan 1982 and 31 Dec 1985 excluding any cars that were regulated out by the **FIA** that comply with **Ch.13 App.15 Art.9.2.d** or **Ch.13 App.17 Art.2.3.a.iv** and **v**.

Historic Category 4b – **Cars** homologated in Groups A, N and B between 1 Jan 1986 and 31 Dec 1990 excluding any cars that were regulated out of **Competition** by the **FIA** that comply with **Ch.13 App.15 Art.9.2.d** or **Ch13 App.17 Art.2.3.a.v**.

Historic Category 5 – Cars homologated between 1 January 1991 and 31 December 1999 that comply with **Ch.13 App.17 Art.2.3.a.vi**.

Permit. Within these **Regulations** a **Permit** is a form of written permission from the **ASN** (and where applicable to any **International Event** then by **FIA** or another **ASN**) and includes variously **Permit**, **Event Permit**, **ASN Permit**, **Organising Permit**, **Promoters Permit**, **Championship Permit**, **Attempt Permit** and **Exemption of Permit**.

Permitted Event. A **Competition** authorised by the **ASN** or by **FIA** or the **ASN** of another jurisdiction by the issue of a **Permit** whether with or without conditions attached to the issue of the **Permit**.

Permitted Fuel. Commercially available Motor Fuels - See Ch.8 App.1 Art.1.7

Persons. All and any, but not limited to, participants, coaches, volunteers, teams, employees, any person howsoever connected to an **Entry** or **Entrant** at a **Permitted Event** and anyone involved in motor sport, whether or not they are **ASN Licence** Holders or otherwise.

Pit Lane. That part of the **Track** that provides **Competition Vehicles** with access to and from the **Pits**.

Pits. An area that may be provided by the **Organisers** for **Competitors** and their authorised **Persons** for the purpose of servicing **Vehicles**, in accordance with the **Official Documents** and that has direct access to the **Pit Lane**.

Ports (Inlet/Exhaust). Openings and passages in components forming or housing the combustion chamber and/or cylinders through which inlet and exhaust gases pass.

Practice including Qualifying Practice. That part of an **Event** intended to enable a **Competitor** to familiarise themselves with the **Course** or **Track** and which may be used by the **Organisers** to determine starting order or position. **Practice** is subject to all the **Regulations** and **Official Documents** governing the **Event**.

Practising / Training Event. An **Event** organised for the purpose of enabling **Drivers** to gain experience of their **Vehicles**. To qualify as a **Practising / Training Event** there must be no element of **Competition**, no awards, times may be recorded but not published and **Vehicles** may not be started simultaneously. There may be no revenue other than from **Entry Fees**.

Production Car Autotest. An **Autotest Event** restricted to strictly **Production Cars** as defined in the **Specific Regulations**, intended to encourage newcomers to the sport.

Production Kit Car. A minimum of ten identical cars must have been constructed within a twelve consecutive month period. The following items must be identical on all ten cars: wheelbase, track, engine type and specification, weight at front and rear wheels, body shape and material, wheel diameter, wheel rim width. (dimensions are subject to normal manufacturers' [i.e. homologation] tolerances).

Programme. A document prepared by the **Organisers** of an **Event** for the purpose of informing the participants and spectators about the **Event**.

Promoter. Any person or body financially responsible for a **Competition**. The organisation of the relevant **Competition** shall always be the responsibility of the Organiser.

Proprietary Equipment. Equipment marketed under a trade name that is on general sale to the public.

Protest. A formal complaint, lodged within specified time limits by an **Entrant** or **Competitor** in accordance with **Ch.2 App.9 Art.1.1.1.**

Public Highway. See: S.328 Highways Act 1980. Generally, a way over which there exists a public right of passage without let or hindrance.

Public Relations ('PR'). The management and dissemination of strategic information connected to a proposed **Permitted Event** including mandatory and or statutory notifications and consultations.

PVG. A criminal record check in Scotland from Disclosure Scotland and more particularly the Protecting Vulnerable Groups Scheme disclosure.

Race. A **Competition** where two or more vehicles are started simultaneously from the same **Start Line** and over the same **Course** on the same **Track**, and in which the winner is the **Competitor** who first completes a specified distance, including any **Handicap** credit, or who completes the greatest distance in a specified time.

Racing Car. See **Single-Seater Racing Car** and **Sports Racing Car**.

Radiator/Intercooler. Mechanical part allowing for the exchange of thermal energy between two fluids (including air).

Rally. A **Competition** that may utilise the **Public Highway** and where there is an imposed average speed for **Competitors**, but which does not meet the requirements of a **Classic Reliability Trial**, **Navigational Scatter Event**, **Treasure Hunt** or **Road Safety Rally**. The greatest speed must never form a factor for the **Class**ification. All motoring **Event**s utilising the **Public Highway** in England, Scotland or Wales are subject to **Motor Vehicles (Competitions and Trials) Regulations**. A **Rally** will comply with at least one of the following categories and must meet the organisational requirements laid down by the **ASN**. The **Regulations** must clearly indicate the category of **Rally** that is being organised.

a. **Economy Rally**. Designed to assess the fuel economy of **Competitors**' cars and in which the overall results are based on the relative fuel consumption of these cars.

b. **Navigational Rally**. A **Rally** designed to **Test** the navigational skill of the crew.

c. **Road Rally**. A **Rally** in which the **Competition** on the **Public Highway** does not qualify for an alternative category and in which marking for maintaining a time schedule forms a substantial part of the **Competition**.

d. **Single Venue Stage Rally**. A **Special Stage Rally** that uses parts of stages more than four times.

e. **Special Stage Rally**. A **Rally** containing **Special Stages** joined by linking sections that may utilise the **Public Highway**.

f. **Twelve Car Rally**. A **Rally** complying with one of the above categories that falls within the provisions of automatic authorisation under the **Motor Vehicles (Competitions and Trials) Regulations** (where applicable). The category must be indicated in the title of the **Event** (i.e. **Economy Twelve Car Rally**, etc).

g. **Vintage Rally (or Run)**. A **Rally** complying with one of the above categories and restricted to **Vehicles** built prior to 1st January 1941 (including Post- Vintage). The category must be indicated in the title of the **Event** (i.e. **Vintage Twelve Car Rally**, etc).

h. **Veteran Rally (or Run)**. A **Rally** or **Run** restricted to **Vehicles** built before 1 Jan 1919.

i. **Historic Special Stage Rally.** As e. above, but participation is limited to cars complying with the appropriate **Technical Regulations** for **Historic Special Stage Rally Vehicles**.

j. **Historic Road Rally**. As c. above, but participation is limited to cars complying with the appropriate **Technical Regulations for Historic Road Rally Vehicles**.

k. **Endurance Road Rally**. A **Road Rally** where a substantial proportion of the **Competition** takes place on the highway, timed to the minute, and which shall also include **Special Tests** on private property which may be timed to the second.

l. **Trophy Rally**. A supplementary **Event** to a main **Rally**, which may be provided by **Organiser's** to permit **Competitors** who retire from the main **Event**, the opportunity to have further **Competition**. **Vehicles** must be re-scrutineered for conformity. **Competition** may only commence at a predetermined time during the **Event**. These **Competitors** may run behind the main **Event** or be re-introduced into their original seeded position, at the **Clerk of the Course's** discretion. **Results** should be displayed and awards may be presented. The intention to promote a **Trophy Rally** must be included within the published **Event Regulations**.

m. **Practice / Training Rally**. A **Practice Event** may be promoted as a supplementary **Event**, to permit **Competitors** who retire from the main **Event**, the opportunity to gain further experience of their **Vehicles**. The intention to provide a **Practice Event** must be included within the published **Event Regulations Vehicles** must be re-scrutineered for conformity. **Competition** may only commence at a pre-determined time during the **Event**. These **Competitors** may run behind the main **Event** or be re-introduced into their original seeded position, at the **Clerk of the Course's** discretion. There will be no results or awards.

n. **Targa Road Rally**. A schedule timed rally where the principal **Competition** comprises the **Competitor's** performance on **Special Tests**.

o. **Historic Special Stage Rally**. As **e. above**, but participation is limited to cars complying with the appropriate **Technical Regulations** for **Historic Special Stage Rally Vehicles**.

p. **Historic Road Rally**. As **c. above**, but participation is limited to cars complying with the appropriate **Technical Regulations** for **Historic Road Rally Vehicles**.

q. **Endurance Road Rally**. A **Road Rally** where a substantial proportion of the **Competition** takes place on the highway, timed to the minute, and which shall also include **Special Tests** on private property which may be timed to the second.

Rallycross. A timed **Event** with several **Cars** starting simultaneously that takes place on a closed **Circuit** with a combination of sealed and unsealed surfaces.

Rallysprint. A title reserved for special **Event**s run with the specific approval of the **ASN** that can only take place at **ASN** licensed Venues.

Recognised Group. A **Club** or association that does not have individual members but consists of a number of independent Clubs, registers or associations, that need not themselves be **Recognised Organising Clubs**.

Recognised Club. A **Club** satisfying the criteria laid out in **Ch.1 Art.7** and that has at least 25 members who are individuals. Clubs have the right to apply for organising Permits.

Record. The best result obtained under the prescribed conditions.

Registered Member of a Club. Any **Member** of a **Club**, other than an **Honorary Member**, who has been duly elected and accepted for membership for at least 12 months or the balance of the **Club**'s current membership year. Any form of membership that permits the holder to compete in **Club Events**, must also entitle such a member to be present and vote at **General Meetings** of the **Club**, unless that member is under the age of 16 in which case a parent or guardian may exercise the vote on their behalf, if so required by the **Club**.

Registration. The required act of membership of the **ASN** as mandated by the **NCR** and or the **ASN**.

Regional Association. An **Association** of **Organising Club**s that has been formed by and on behalf of the **ASN**.

Regulated Activity. Regulated activity is work which a barred person must not do, it includes providing care, supervision, instruction, training, advice and guidance to children or adults at risk. It is defined in legislation in the Disclosure (Scotland) Act (2020) and the Safeguarding Vulnerable Groups Act (2006).

Restrictor. Any device with stated orifice and minimum thickness 3mm of non-porous material, imposed or inserted either in an inlet tract for the purpose of **Control**ling the passage of the air / fuel mixture into the induction system and/or combustion chamber, or inserted in the exhaust tract to **Control** the passage of exhaust gases.

Road Book or Route Card. A document supplied to **Competitors** instructing them how to proceed from one point to another, and containing such information as to the **Controls** and **Checks** that they are to visit during the **Event**, how they will establish that they have visited checks not manned by **Officials**, details of **Tests**, etc.

Road Safety Rally. An **Event** organised with the intention of promoting Road Safety and falling within the provisions of automatic authorisation under the **Motor Vehicles (Competitions and Trials) Regulations** (where applicable). Such **Event**s may qualify for an exemption of **Permit**.

Road Section. Any section of the route of a **Special Stage Rally** (excluding **Control** and service areas) whether on the **Public Highway** or not that links **Special Stages**.

Rollover Protection System (ROPS). Multi-tubular structure installed in the cockpit and fitted close to the bodyshell, the function of which is to reduce the deformation of the bodyshell (**Chassis**) in case of an impact. (See **Chapter 7 App.3** Roll-Over Protection Systems.)

RTA Licence. A driving licence issued by or on behalf of a national government.

Saloon Car. See **Touring Car**.

Scheduled Speed. The average speed calculated from the time allowed to **Competitors** to cover a certain distance. In the case of highways this distance shall be that determined from 1:50,000 Ordnance Survey maps (or equivalent local maps) along the route specified by the **Organisers**, or if no route is specified by the shortest route.

Section. That portion of the route of a **Competition** between two **Controls**, or that portion of a route of a **Competition** to which specific requirements apply, eg:

a. **Standard Section**. Any section of a **Rally** where a **Penalty** is imposed for late arrival or arrival before Scheduled Time.

b. **Neutral Section**. Any **Section** of a **Rally** where the Organiser must impose an early arrival **Penalty** and, where applicable, a maximum lateness **Penalty** and where a **Competitor** is supplied with supplementary information by the Organiser that requires the **Crew** to observe special restrictions as to their driving behaviour and being a **Section** where a **Competitor** may not make up time.

c. **Observed Section**. A **Section** of a **Trial** that has to be traversed non-stop to avoid **Penalty**.

d. **Regularity Section**. A **Section** of a **Rally** in which **Competitors** are required at all times to adhere to a set speed and in which adherence to that speed may be checked at intervals during the **Section**. The start and finish must be clearly defined.

e. **Transport Section**. Any **Section** of a **Rally**, being at least four miles in length, where no **Penalty** is applied for early arrival, other than in accordance with **Chapter 13 App.4 Art.7** but where applicable, a maximum lateness **Penalty** can be applied. A **Section** whose sole purpose is to transport **Competitors** between other types of section.

Seminar. An educational presentation by or on behalf of the **ASN** with or without participation by the attendees.

Series Production Car. A **Vehicle** of which at least 1,000 identical examples have or are being manufactured within a twelve consecutive month period.

Series Production Engine. An engine sourced from a **Series** production **Vehicle** The origin of the cylinder head and cylinder block must always be established.

Servicing. Work carried out on the **Competition Vehicle** by any person, other than the competing **Crew**, or the use of any part or tools not carried in the **Competition Vehicle**.

Shortest Route. The shortest route between two points using only **Public Highway**s, unless specific permission has been obtained for the use of private property and all **Competitors** so informed.

Signal. A means of communication to a **Competitor** by **ASN** (or **FIA** where applicable) approved flag or light signals.

Silencer. [A noise-deadening device forming part of the exhaust system for reducing the noise emitted by the exhaust of an internal combustion engine.

Silhouette. The outline of the original body shape, in the side and plan view, of the **Vehicle** above a line drawn through the front and rear hubs.

Single Seater Racing Car.

a. Unless period defined, the construction of the **Vehicle** must be symmetrical, i.e. when the **Vehicle** is

lifted laterally and weighed without the **Driver**, the half weight on either side must be equal to half the overall weight

b. ±5%.

c. It must be possible to enter or leave the **Driver's** seat without it being necessary to remove or detach any part of the **Vehicle**, other than the steering wheel, side impact protection systems, including those incorporating the head rest and any helmet / head protection or seat belts/harnesses.

d. The **Driver**, sitting in the driving position, must face forward.

Social Run. A non-competitive run for participants where there is no **Competition** purpose than driving in company to a predetermined point and which is not within the jurisdiction of the **ASN**.

Solar cell. A photo voltaic element which is used to convert solar radiation into electrical energy.

Solar electrically powered Vehicle. **Vehicles** solely propelled by the direct or indirect conversation of solar energy.

Solar module. Several solar cells making up one mechanical unit.

Spaceframe Chassis. A structure constructed of individual tube components of any section.

Spare Wheel. A wheel with tyre suitable to be used as a replacement for one in use on the **Vehicle**.

Specialist Production Car. A **Vehicle** of which at least 20 identical examples are manufactured within a twelve consecutive month period and fitted with a **Series Production Car** engine.

Special Stage. A **Section** of a **Rally**, on roads or land for which the **Event** has exclusive access, or on public roads closed by Government legislation specifically permitting closure for motor sport purposes, where the marking for maintaining a time schedule forms a part of the **Competition**.

Special Task. A specific competitive element of a **Competition** or **Event** as provided in the **Official Documents**.

Special Test. A **Test**, permitted in road **Rallies** which takes place off the **Public Highway** in which a **Competitor** is required to perform a manoeuvre or **Series** of manoeuvres set by the **Organisers**. If timed, the **Competitor** shall not be required to exceed an average speed of 30mph or 40mph for **Endurance Road Rallies**. No benefit shall accrue to any **Competitor** exceeding the set average speed. **Road Rallies** with Standard Sections timed to an accuracy of less than a minute may include one **Special Test** at the start of the itinerary, and one additional **Special Test** at the same location, which the first **Competitor** must start no earlier than midnight, and all **Competitors** must complete before 03:00.

Specialist Competition Engine. An engine, other than a **Series Production Engine** or motorcycle engine, of four cylinders and normally aspirated, no greater than 2,500cc.

Spectator Safety. The method of providing to the extent possible a relatively protected environment for the viewing of a **Competition**.

Speed Event. An **Event** in which cars run individually, even though two or more individual runs may be taking place concurrently, over a **Course** exceeding 200m in length and in which the relative performance of the **Competitors** is assessed by timing them over a given distance. The winner, or the most meritorious performer, is the **Competitor** who covers the distance in the least time. The term will include hill climbs, sprints, slaloms, drag **Race**s, autocross and other similar **Event**s.

Spill Kit. See **Environmental Spill Kit**.

Spoiler. See **Aerodynamic Device**.

Sponsor. A person or body making a contribution, financially or in kind, towards the promotion of a **Competition** or of a **Competitor**.

Sports Car. A **Vehicle** having either a non-detachable or a detachable roof with no more than one door on each side and a minimum of two seats situated one on each side of the longitudinal centreline. The two seats must be crossed by the same transversal plane. Interior dimensions must be inferior to the minimum dimensions applicable to **Touring Cars.**

A minimum of 100 cars must have been constructed within a 12 consecutive month period.

Sports Racing Cars. Two-seater open or closed racing car, built for the sole purpose of taking part in **Race**s on closed **Circuits**. Closed cars must have a windscreen and two doors (one on each side of the cockpit).

Stage Rally Championship Control Panel. A consultative body appointed from time to time by the **ASN** to discuss

proposed **Rally Championship**s and to inform but not to make decisions.

Standard Part. Is a part, the specification, features, location and method of operation of a part are as supplied when new by the motor manufacturer for the model and date of **Vehicle** as shown on the **Entry**.

Standard Pattern Part. Replacement part that has a similar form shape and features as the standard part and is made using similar materials and manufacturing processes e.g. A **Standard Part** manufactured by a non-original equipment supplier that is fully interchangeable with the standard part.

Start. The **Start** is the moment when the order to **Start** is given to a **Competitor** or **Competitors**, or when a **Competitor** crosses the **Start Line** actuating automatic timing equipment.

Start Line. A **Start Line** is the first **Control** line on a **Course**.

Station. A designated area in which the **Vehicle** may stop during the attempt to undergo authorised operations

Stewards of the Event. The senior judicial body at a **Permitted Event**. Where an **ASN Steward** is appointed then that person shall be the Senior **Official** of the **Event**.

Sub frame. Part fastened to the bodyshell or **Chassis** and / or **ROPS** to which are attached parts of the suspension and / or drive train.

Subjective Route Notes. Information relating to a **Special Stage**, prepared by an **ASN** registered supplier, which is available to all **Competitors** in an **Event**.

Suitability Check. A check of a person's previous criminal convictions / offending history, carried out by the Disclosure and Barring Service required for people working or volunteering in **Regulated Activity** in England, Wales or Northern Ireland, or Disclosure Scotland (under the Protection of Vulnerable Groups (**PVG**) Disclosure Scheme) for people working or volunteering in **Regulated Activity** in Scotland.

Supplementary Radio Points. The location of radio communication **Controls** that are supplementary to the **Event Control**.

Suspension. A person or body shall be said to be suspended when he has for a certain period been forbidden to take part in any **Competition**.

Suspension (Vehicle). The system(s) by which sprung movement is provided between the main **Chassis** structure and the road wheels. **Suspension** will be deemed to consist of all the partly sprung components that move relative to the main **Chassis** structure for the purpose of making connection between it and the entirely unsprung parts but not including components exclusively concerned with steering, braking and power transmission.

a. **Suspension Mounting**. the member or component attached to the **Chassis** on which the moving element(s) of the suspension is mounted.

b. **Suspension Mounting Points**. the point(s) on the **Chassis** and the mounting that forms the centres of attachment to the **Chassis**.

c. **Suspension Locating Point**. the point in the mounting about which the suspension articulates.

d. **Suspension Bush**. considered in relation to a suspension mounting or another suspension member it may have one of two forms:

e. a lining of an external element that rubs directly upon an inner element,

f. a pre-manufactured and catalogued unit within which all articulation is provided.

g. **Suspension Bush Housing**. the aperture in the suspension member that supports and locates the suspension bush. In the case of the MacPherson strut top mountings the bush housing is considered to be the suspension mounting.

h. **Sprung Suspension**. a suspension system with the weight of the **Vehicle** supported by discrete springing media none of which may come within the definition of a '**Temporary Part**'. Flexible mounting bushes are unacceptable as springing media.

Sweeper Cars. A **Vehicle** designated by the **Organisers** to pass through a **Course** or Stage after the last competing

Car has passed through.

Target Time. The time specified in the **Official Documents** in which the **Competitor** should cover the distance between two consecutive **Time Controls** (or be subject to **Penalty**).

Taster Event. An **Entry** level **Competition** where, to encourage first time participation in motor sport, participants will be deemed to be a member of the **Organising Club** for the day.

Telemetry. **Telemetry** is the means of transfer of information and / or data from a data source to a data receiver without a cable. In motor sport applications, the term telemetry usually refers to "uni-directional" transfer of data to the pits whilst the **Vehicle** is on the **Circuit**, without any acknowledgement signal being transmitted by the pit based equipment. "Bi-directional" telemetry, which describes and facilitates full transfer of data in both directions, is not permitted.

Temporary Part. A part that differs in type or material from that normally used on or that which has a short useful life expectancy.

Test. A **Competition** held on private ground, in which a **Competitor** is required to complete one or a **Series** of manoeuvres as laid down by the relevant instructions (see also **Autotest**).

Time Card. A document upon which the time of a **Competitor's** arrival at or departure from a **Control** is recorded. A **Time Card** may or may not be incorporated in a **Road Book or Route Card**.

Time Control. A designated location on a **Course** or Stage of an **Event** specified in the **Official Documents** at which the **Competitor's** arrival and or departure time must be recorded for the purposes of the **Competition**.

Timing Data. The record(s) of **Competition** relevant timing information relating to individual **Competitors** and all **Competitors** taking part in the **Event**.

Touring Assembly. An activity organised with the primary object of assembling tourists at a point determined beforehand.

In a **Touring Assembly**:

a. a prescribed route may have to be followed

b. pre-arranged points may be provided for in the **Event**'s itinerary

c. no limits of speed may be laid down

d. no requirement to visit prearranged points, other than a requirement to report at a final point not later than a specified time, are permitted

e. no awards of any description, other than those in relation to activities arranged at the finishing point may be made or given.

Where any or all of the above points become a mandatory part of the itinerary the **Event** will be subject to the requirements of **Route Authorisation (Motor Vehicles (Competitions and Trials) Regulations)**.

The **Regulations** for the **Event** must be clearly endorsed '**Touring Assembly**', and before publication the consent in writing of the **ASN** and its approval of the **Regulations** for the **Touring Assembly** have first been obtained, by issue of a Certificate of Exemption, and where the route runs through the territory of an **ASN** other than **Motorsport UK**, that **Chapter 13 App.1 Arts.1.6 – 1.8** of these **Regulations** has been complied with.

The content of a **Touring Assembly** may include additional **Event**s (other than speed) provided that they are held only at the place of final assembly

No prize money may be allocated in respect of **Touring Assemblies**.

Touring Car. **Series Production Cars** of which at least 2,500 identical examples are, or have been manufactured, within a twelve consecutive month period and which are equipped with a minimum of four adult size seats, an integral non-detachable roof, a minimum of two doors, one on each side of the **Vehicle** and meet the dimensional requirements shown in **Chapter 7 App.13 Diagram 67.**

Track (other than a Special Stage). That part of a **Course** that may have a sealed or unsealed surface, that is designated to be used by **Competitors**. Its boundary may be the edge between its surface and the adjoining ground or a dotted or continuous painted line on a sealed surface, or as indicated by markers. A **Race Track** must have a sealed surface with adequate provision for the drainage of standing water.

Track Licence. The written approval of a **Track** by the **FIA** or the **CIK-FIA** (International **Track Licence**) or by the **ASN** (**National Track Licence**).

Traction Battery. The collection of all battery packs which are electrically connected for the supply of energy to the power **Circuit**.

Treasure Hunt. An **Event** involving the solving of certain problems in which the use of a **Vehicle** is merely incidental as a means of transport and the skill or experience of a **Driver** plays no part. If the **Event** utilises the **Public Highway**, it shall be run in accordance with the **Motor Vehicles (Competition and Trials) Regulations**. Such **Event**s may qualify for an **Exemption of Permit**.

Trials. A number of tests on private ground with the aim of bringing the car to an involuntary stop. Defined as:

a. **Car Trial**. A '**Sporting Trial**' confined to **Vehicles** of a production type over a **Course** that is suitable to **Test** equally the capabilities of cars of all sizes.

b. **Classic Reliability Trial**. A **Competition** based on the ability to climb hills or traverse difficult sections nonstop, that may use the **Public Highway** for all or part of its route or may be entirely on private ground.

c. **Sporting Trial**. A **Trial** in which the marking during the **Event** is mainly based upon ability to climb hills or traverse difficult sections and in which the distance upon a highway does not exceed 50 miles.

d. **Evening Trial**. A **Clubman** status **Event** designed for **Clubs** to organise early evening, mid-week during the Summer months. The **Official Documents** must specify the type of **Event** (a, b or c above) which must comply with the specific requirements for each **Event** type.

Trucks. Two-axle road tractors, with a minimum production of 50 units during any 12-month period, duly certified by an official document from the manufacturer. The general shape of the tractor unit must correspond to the shape of a road-going tractor unit homologated for the transportation of merchandise.

Unauthorised Pace Notes. Documentary (whether physical or digital) notes (including any pictorial or diagrammatic representation) providing navigational aid details of a **Course** or Stage on a **Competition** route used by a **Competitor** during or for the purposes of a **Competition** and which have not been provided by or at the instance of the **Organisers**.

Undertaking. A written commitment to perform a particular obligation.

Unitary Construction. A **Vehicle** construction method whereby metal and/or composite materials are welded, riveted or bonded into a single structure to form both **Chassis** and **Bodywork** as a single structure.

Venue. The whole area or areas used for an **Event** under the **Control** of the Organiser and / or **Venue** owner(s).

Vulnerable People. Any adult who may have difficulty in protecting themselves from harm and/or abuse and in promoting their own interests.

Wheel. Flange and rim. By complete wheel is meant flange, rim and tyre.

Windscreen. A rigid transparent shield located in front of **Vehicle** occupants to protect from the wind and airborne particles.

Winter Championship. A **Championship** so designated and comprising **Permitted Event**s taking place between 1 November and the last day of February in the following year.

World Record. A record recognised by the **FIA** as the best performance irrespective of **Class**.

CHAPTER 1 GENERAL GOVERNANCE AND ESTABLISHMENT

Appendix 2 - Competition Fees

The ASN fees structure is designed to support motorsport at all levels. Current licence and other fee levels are given below.

1. **Competition Licence Fees**
   All Licence applications will be subject to an additional handling fee of £1.95 towards fulfilment costs including printing, postage and packaging. All fees except where otherwise stated are shown 'VAT inclusive' and may be subject to change in the event of the VAT rate being altered.

Race

International – ITA	£1,550.00
International – ITB	£570.00
International – ITC-C	£290.00
International – ITD-C	£290.00
International Truck – ITC-C	£290.00
National Truck	£192.00
National	£192.00
Club	£119.00

Kart

International Senior - ITE	£202.00
International Restricted - ITF	£202.00
International Junior – ITG	£202.00
National	£114.00
Interclub	£78.00
Clubman	£51.00
Clubman (Bambino)	£51.00

RS Drag

International IT DR	£290.00
National	£192.00

RS Cross Country

International	£290.00

RS Rally

International – ITC-R	£290.00
International – ITD-R	£290.00
Stage National	£192.00
Stage Interclub	£119.00
National – Navigator	£124.00

RS Speed

International – ITD-R	£290.00

RS

National	£184.00
Interclub	£85.00
Clubman	FOC

When two or more Competition Licences for one person are applied for at the same time, the total fee will be that of the most expensive licence, plus 75% the cost of the other Licence(s). These reductions will not apply to Entrant Licences. Licences once issued may not be returned for refund.

Entrant Licences

International FIA Open Valid for UK & Overseas	£12,450.00
International (Non-FIA Championship / Series)	£5,175.00
International Restricted Valid for UK only	£1,295.00
National Valid for UK National Events only	£385.00
Kart International Valid for UK & Overseas	£510.00
Kart Valid for UK	£360.00
Duplicate (Inc. Club)	£130.00
Kart Interclub	£155.00
Entrant PG	£30.00

Other

Failure to produce Licence (Ch.6 App.1 Art.12.2)	50% of Licence Fee capped at £125.00
Express Handling 3 Day Express Service 3 Hour Service by appointment only	 £95.00 £175.00
Replacement of Licence	£50.00
Upgrading of Licence*	£52.00
Replacement of Entrant Licence	£70.00

*This fee is to be paid in addition to the difference between the cost of the existing licence and the new licence.

2. Officials Licences

Clerk of the Course

Car International*	FOC
Kart International*	FOC
Rally International*	FOC
Car, Kart, Rally & Other – National	FOC
Car, Kart & Other – Interclub & under	FOC
Driving Standard Observer	FOC
Probationary	FOC

*plus **FIA** or **CIK** Yearbook at cost

Rally Accredited Media

Level 1	£83.00
Level 2	£83.00
Level 2 deposit	£100.00

Scrutineers & Technical Commissioner

Scrutineer & Technical Commissioner	FOC
Scrutineer – Trainee	FOC

Timekeepers

Timekeeper - All	FOC
Timekeeper - Trainee	FOC

Driver Instructions

ARDS – All Grades	£52.00
ARKS – All Grades	£83.00
AHASS – All Grades	£83.00
BARS – All Grades	£83.00
ARKS Examiner – All Grades	FOC

All other Registered Officials

All other Registered Officials	FOC

3. Fees for Appointment of ASN Officials

ASN Steward

These are set fees charged to the **Organising Club**. **ASN** nominated **Officials** will claim their out-of-pocket expenses and travel expenses direct from the **ASN.**	
For one-day **Events** requiring an **ASN Steward**, a fee will be charged per permitted day (which is a contribution to expenses including but not limited to travel and out of pocket expenses).	
ASN Steward fee for Clubmans, Interclub, National and International Permits	
One-day fee	£55.00 + VAT/panel
For multi-day **Events** requiring an **ASN Steward**, a fee will be charged per permitted day (which is a contribution to expenses including but not limited to accommodation, travel and out of pocket expenses).	
ASN Steward fee for Clubmans Permits	
Two-day fee	£105.00 + VAT/panel
Three-day fee	£210.00 + VAT/panel
Any additional days	£105.00+ VAT/panel per day
ASN Steward fee for Interclub, National and International Permits	
Two-day fee	£262.50 + VAT/panel
Three-day fee	£525.00 + VAT/ panel
Any additional days	£262.50 + VAT/panel per day

ASN Safety Delegate

These are set fees charged to the **Organising Club**. **ASN** nominated **Officials** will claim their out-of-pocket expenses and travel expenses direct from the **ASN.**	
For one-day **Events** requiring an **ASN Safety Delegate**, a fee will be charged per permitted day (which is a contribution to expenses including but not limited to travel and out of pocket expenses).	
One-day fee	£55.00 + VAT
For multi-day **Events** requiring an **ASN Safety Delegate**, a fee will be charged per permitted day (which is a contribution to expenses including but not limited to accommodation, travel and out of pocket expenses).	
Two-day fee	£262.50 + VAT
Three-day fee	£525.00 + VAT
Any additional days	£262.50 + VAT per day

ASN Observer

These are set fees charged to the **Organising Club**. **ASN** nominated **Officials** will claim their out-of-pocket expenses and travel expenses direct from the **ASN.**	
For one-day **Events** requiring an **ASN Observer**, a fee will be charged per permitted day (which is a contribution to expenses including but not limited to travel and out of pocket expenses).	
ASN Observer fee for Clubmans, Interclub, National and International Permits	
One-day fee	£55.00 + VAT
Two-day fee	£105.00 + VAT/panel
Three-day fee	£210.00 + VAT/panel
For multi-day **Events** requiring an **ASN Observer**, a fee will be charged per permitted day (which is a contribution to expenses including but not limited to accommodation, travel and out of pocket expenses).	
ASN Observer fee for Interclub, National and International Permits	
Two-day fee	£262.50 + VAT
Three-day fee	£525.00 + VAT
Any additional days	£262.50 + VAT per day

Others (per day)

ASN Technical Commissioner	£370.00
ASN Environmental Inspector	£370.00

4. Closed Road Application Fees

Clubs seeking to make an application for a Motor Race Order under The Road Traffic Act 1988 (Motor Racing) (England) Regulations 2017 or The Road Traffic Act 1988 (Motor Racing) (Wales) Regulations 2018 and The Motor Sport on Public Roads (Scotland) Regulations 2019 on submission of their proposals for an organising **Permit** pay an administrative fee of **£560.00**.

The **ASN** will only accept applications for organising **Permits** for closed road motorsport events from **ASN** registered motor Clubs. If the application is successful, the normal organising **Permit Fees** will still apply. Where a promoter utilises the services of a Club for the running of a motorsport **Event**, the **Club** is advised to pass the **ASN** costs and any further administrative costs on to the promoter.

5. Event – Other

Late Permit Application Fee (Ch.3 App.1 Art.1.1)	£35.00
Late payment fee per month	£30.00

Note: Per Capita and other payments together with all required documentation must be sent to the **ASN** after each **Event** in accordance with Ch.3 App.6 Art.1.5. Failure to do so may, in addition to the late payment fee, invoke penalties as set out in Ch.3 App.1 Art.1.2.

6. Championship Permits

Grade A – British Championship – Commercial	£11,125.00
Grade B – Principal Commercial Championship	£5,565.00
Grade C – Commercial Sponsored Unsponsored	 £700.00 £215.00
Grade D	£71.00
Race Series Registration	£31.00

Championship Commitment Guarantee

Grade A & B	£41,000.00
Grade C & D	£15,750.00

7. Facility Fee – Record Attempts and Other Events

7.1. Record Attempts

National Record Attempt Authorisation per Competitor per Class (includes Ratification Fees for up to 3 records)	£3,440.00
Ratification Fee for each record claimed over 3	£690.00

Attempts at **International Records** must be notified to the **ASN** (as agents of the **FIA**) at least 6 weeks prior to the attempt.

ASN Fee	£6,880.00
ASN direct expenses will be invoiced at cost	

Separate fees are payable in advance, through **ASN** to the **FIA**. These fees will be advised on request.

7.2. Other Miscellaneous Events

Facility fee for the authorisation of Events which fall outside these Regulations by negotiation.

8. Annual Registration of Recognised Club or Association

Car Clubs	£87.00
Car & Kart Club	£145.00
Recognised Groups	£87.00
Marshals' Club (including Rescue)	FOC
Regional Associations	FOC
Approved Organisation	FOC
AHASS	£520.00
ARDS	£765.00
ARKS	£100.00
BARS	£765.00
Appeal to National Court for unsuccessful Club Recognition	£550.00

9. Annual Calendar

Late application of change of date (Ch.3 App.9 Art.1.2)	£12.00
Cancellation (Ch.3 App.9 Art.1.3)	£10.00

10. Track Licences

Track Licence – Car

Race International + FIA fee	£8,745.00
Race National	£4,500.00
Speed International + FIA fee	£1,370.00
Speed National	£1,165.00
Speed Interclub	£820.00

Track Licence – Kart

International + CIK / FIA fee	£1,190.00
National	£1,135.00
Interclub	£820.00
Cancellation (Ch.3 App.9 Art.1.3)	£10.00

New Venues

Fee	£615.00

Notes:

- For venues with no more than one single day **Event** per year, half of the above fee is charged. (Not applicable for International or Truck **Events**)
- Where a number of categories are covered, only the highest value fee is payable.
- **New Venues Fee** to be paid by any new venue to cover the costs of initial desktop study and inspection process.
- Track licence fees incorporate all inspection costs.

11. Judicial

VAT is not payable on Protest Fees, Appeal Fees or Fines. All cheques must be made payable to 'Motorsport UK'.

11.1. Protest Fees and Right of Review Fees at Events

i. below National without an ASN Steward	£75.00
ii. below National with an ASN Steward	£165.00

Non Race

iii. Non Race – National	£315.00
iv. Non Race – International	£500.00

Car & Truck Race

v. Car & Truck Race – National	£500.00
vi. Car & Truck Race – International	£840.00

11.2. **Appeal Fees at Events (excluding Eligibility Appeals)**

Appeals to Stewards of the Event

i. All **Events** with no **ASN Steward**	£155.00
ii. any other **Event** below National with an **ASN Steward**	£315.00
iii. Car & Truck Race - National	£940.00
iv. Non Car & Truck Race – National	£605.00
v. all **Events** not listed above	£940.00

Other

vii. Appeal against the refusal of **Entry** to an **Event** listed in Ch.3 App.5 Art.10.2 which was submitted within 24 hours of commencement of the **Event**	£140.00

11.3. **Appeal fees at Championships**

i. To **Championship Stewards**	£580.00

11.4. **Appeal Fees to the National Court (including Eligibility Appeals)**

i. Further **Appeal** to the **ASN** in respect of **Events** under Art.11.2.i above.	£315.00
ii. Further **Appeal** to the **ASN** in respect of **Events** under Arts.11.2.ii and iv above.	£625.00
iii. Further **Appeal** to the **ASN** in respect of **Events** under Art.11.2.iii and v. above (excluding International)	£940.00
iv. International	£1,680.00
v. Appeal for remission of sentence (Ch.2 App.6 Art.1.11)	£605.00
vi. Appeal to an **Eligibility Appeal Panel** (Ch.2 App.7 Part C)	£605.00
vii. Appeal against the decision of **Championship Stewards** (Art.11.3 above)	£605.00
viii. Appeal to the **National Court** for unsuccessful **Club Recognition**	£560.00
ix. Appeal against the refusal of **Entry** to an Event or **Championship** (Ch.6 App.1 Art.10.3.b and Ch.2 App.7 Part D	£310.00
x. Request for review of decision of a **Championship Control Panel** (Ch.4 App.3 Art.1.8)	£575.00
xi. Each party to an Application for an **Investigatory Hearing** by the **National Court** (Ch.2 App.7 Art.9.8)	£2,825.00

11.5. **Arbitration Fee**

Request for Arbitration (non-returnable)	£1,060.00

11.6. Fines

Maximum Fines unless otherwise stated

i. Failure to attend **Drivers Briefing** (Ch.5 App.5 Art.2.3h)	£290.00
ii. Contravention of Ch.6 App.1 Art.1.6	£290.00
iii. Contravention of Ch.2 App.8 Art.1.17	£290.00
iv. ***Event** where there is no **ASN Steward**	£290.00
v. ***Event** where there is an **ASN Steward** – International	£12,000.00
vi. ***Event** where there is an **ASN Steward** – all other	£1,200.00
vii. *Tribunal	£60,000.00

12. FIA Fees

The **ASN** acts as the applicant's agent when dealing with the **FIA** in respect of **Calendar Inscription** and **Track Licence** fees which will be converted at the prevailing exchange rate to which a Service Charge, no less than 30%, will be added and invoiced accordingly.

13. Invoice Payment Terms

In the absence of any prior agreement, invoices submitted by the ASN are to be settled no later than 30 days after the invoice date. Failure to do so may attract an interest charge equivalent to 4% above the Bank of England base rate, compounded on a daily basis.

14. Event Permit Fees

A fee will be charged for all **Events** (including **Practice** / training **Events)** for which a **Permit** is issued and includes cover by the event public liability policy. The fee will be applied towards the **ASN**'s costs of the Insurance policy, including any insurance premium amount, Insurance Premium Tax and any other applicable taxes, and administrative costs. The indemnity limit of the event public liability policy is £100 million, any one accident or incident.

This **Permit** fee will be calculated on the number of **Competitors** signed on and in attendance (per capita) or a flat rate for the **Event** as detailed below.

The fees listed below are per **Competitor**.

Autotests and AutoSOLO (Ch.19)

	Clubman	Interclub	National	International
Autotest	£13.00	£15.00		
Production Car	£10.00			
AutoSOLO	£12.00	£14.00		
Evening Autotest	£7.00			

Cross Country (Ch.20)

	Clubmans	Interclub	National	International
Trial (Untimed)	£11.50	£15.00		
Safari	£15.00	£16.00	£21.00	
Safari +	£19.00	£20.00	£21.00	
Winch / Team Recovery	£14.00	£15.00		
Hill Rally	£31.00	£36.00	£41.00	
Gymkhana	£10.00			
Promotional Events	£10.00			
Trial (Timed)	£14.00	£16.00		
Tyro Trial	£10.00	£15.00		
Challenge Event	£15.00	£16.00		
Driving Tests	£10.00			
Treasure Hunt	£10.00			
Orienteering	£14.00	£15.00	£16.00	
Point to Point	£14.00	£15.00	£16.00	

Karting (Ch.18)

	Clubmans	Interclub	National	International
Short Circuit (Up to 120)		£11.00		
Short Circuit (121 and over)		£18.00		
Short Circuit			£19.00	£24.00
Race Venue Karting		£22.00	£24.00	£27.00
Schools	£5.00			
Endurance**	£21.00	£22.00		
Kart Clubman (Tyro)	£11.00			
Bambino	£11.00	£12.00		

Circuit Racing (Ch.12)

	Clubmans	Interclub	National	International
Car Race**		£39.00	£43.00	£82.00
Car Race Open			£82.00	
Truck Race		£41.00	£46.00	£93.00
Endurance Race**		£57.00	£62.00	£93.00
Endurance Race Open**			£93.00	

Speed (Chapters 14 & 15)

	Clubmans	Interclub	National	International
Sprint		£34.00	£35.00	£55.00
Hill Climb		£34.00	£36.00	£55.00
Drag Race		£34.00	£36.00	£55.00
Hot Lap Challenge Pro		£34.00		
Hot Lap Challenge Club		£30.00		
Practice Day		£30.00		

Trials (Ch.17)

	Clubmans	Interclub	National	International
Sporting	£11.00	£14.00		
Car Trial	£10.00	£13.00		
Classic	£11.00	£14.00		
Evening Trial	£7.00			

Autocross, Rallycross and Off-Road Racing (Ch.16)

	Clubmans	Interclub	National	International
Autocross / Clubcross	£24.00	£26.00	£28.00	
Rallycross		£33.00	£34.00	£55.00
Off-Road Racing	£26.00	£33.00	£34.00	

Rallying (Ch.13)

Road Rallies

	Clubmans	Interclub	National	International
Road Timed	£31.00	£33.00		
Road	£15.00	£16.00		
Navigation	£15.00	£16.00		
Navigational Scatter*	£33.00			
12 Car Rally*	£33.00			
Targa Road	£16.00	£18.00		
Historic Road	£16.00	£18.00		£33.00
Economy / Vintage	£15.00	£16.00		

Stage Rallies

	Clubmans	Interclub	National	International
Up to 30 miles		£52.00	£57.00	£62.00
30 miles to 55 miles		£72.00	£77.00	£88.00
Over 55 Miles		£103.00	£113.00	£124.00
Single Venue (Multi Use)		£102.00	£103.00	£113.00
Timed Trial		£36.00	£41.00	
Timed Trial Navigator		£97.00		

Certificate of Exemption (Ch.3)

Concours*	£33.00
Gymkhana*	£33.00
ASN Marshals Training	FOC
Road Safety*	£33.00
Touring Assembly / Procession*	£33.00
Treasure Hunt*	£33.00
Veteran Run*	£33.00
Other*	£33.00
Stage Rally Demonstration	£57.00
K-X Arrive and Drive	£4.00
Super K-X	£7.00
Drift Pro	£19.00

*Payment required with applications for **Certificate of Exemptions, 12 Car Rallies** and **Navigational Scatters** (flat fee of £33.00 as specified above)

Team / Endurance races where two or more **Drivers share the driving of one vehicle entered, only one per capita fee is required per **Vehicle**.

CHAPTER 1

Appendix 3 - Insurance

The **Permitted Events** authorised by the **ASN** under the **NCR** are covered by 3 forms of Insurance:

- Public Liability Insurance under the terms of the **ASN Master Policy** covering participants (**Organisers**, **Competitors**, **Officials** and **Volunteer Officials**), landowners and sponsors as set out below.
- **Medical Malpractice Insurance** also under the terms of the **ASN Master Policy** and relating to the necessary medical services provided at **Events**.

Personal Accident Insurance available to participants suffering injury or loss of life at **Events**, details of which can be obtained from the **ASN Safety Department** or by contacting **safety@motorsportuk.org**.

Where **Events** take place using the **Public Highway**, motor insurance as required by the Road Traffic Acts is not provided by the **ASN Master Policy** and **Competitors** must ensure that they hold the relevant cover. This must be evidenced before the **Event** takes place.

Full details / copy of the **Master Policy** can be obtained from the **ASN** on request to **legal@motorsportuk.org**. Please note all information is correct from 01 January 2026, up to date information can be found: **https://www.marshsport.co.uk/ngb-schemes/motorsport-uk.html**

Insurance and Motor Competitions

1. Introduction

1.1. The **ASN** effects **Master Insurance Policies** only in respect of public liability and personal accident risks and this cover applies to all **Events** held under **ASN Permit** or for which an **Exemption** from **Permit** is granted. The policies are arranged through Marsh Sport, 13th Floor, Lower Castle Street, Bristol, BS1 3AG, United Kingdom Tel: 0345 872 5060 (Mon to Fri 9am to 5pm).

The following notes are in respect of each of the insured policies. Further details can be found here, which is managed by Marsh and not **Motorsport UK**. **What is covered? | Motorsport UK (marshsport.co.uk)** **Public Liability – Information**

1.2. Any person injuring another or damaging another's property because of acting negligently may have an action for compensation brought against them. It is for this reason that the **ASN** has arranged public liability insurance to protect **Clubs** organising **Events** against this potential legal liability. Insurers cannot cover **Events** they are unaware of and for the policies to be effective a **Club** must obtain an appropriate **Permit** or **Exemption** from the **ASN** and organise the **Event** in accordance with **ASN** requirements.

2. Scope of Cover

2.1. The policy is arranged to provide indemnity to the level £100,000,000 for any one incident. This is the limit of the **Insurer**'s obligation no matter how many people are injured or how much property damage occurs as a result of a single incident.

2.2. In respect of pollution / contamination claims the limit of the **Insurer**'s liability is £100,000,000 in the aggregate and cover is restricted to sudden, unintended and unexpected pollution.

2.3. The costs of defending **Clubs** against allegations likely to be the subject of indemnity under the policy are also met by Insurers. They will of course take over the control and conduct of that defence.

2.4. The first £500 of any claim for damage to property will be the responsibility of the **Club** and this deductible amount is payable in respect of each and every incident which gives rise to a claim.

2.5. Where the **Club** has had a claim(s) in the previous 12 months this excess may be increased at the discretion of the **ASN** but not without prior notification to the **Club** concerned.

Marsh

Motorsport insurance specialists

When you are involved in motorsports, you want to be confident that you have the right insurance in place.

Solutions include:

- Tools and equipment, storage, and transit solutions.
- On event/stage accident damage cover for course cars including safety, officials and marshals and zero vehicles.
- On track competition vehicle insurance.
- Personal accident and repatriation cover.
- Liability insurance for annual or standalone events.
- Track days and more.

The appointed broker to Motorsport UK.

www.marshsport.co.uk/motorsport

This is a marketing communication

Marsh Sport is a trading name of Marsh Ltd. Marsh Ltd is authorised and regulated by the Financial Conduct Authority for General Insurance Distribution and Credit Broking (Firm Reference No. 307511). Copyright 2022. 22-804280778.

A business of Marsh McLennan

3. Who is Protected?

3.1. The **Master Policy** protects an **Organiser** or promoting **Club** and its **Officials** for their potential legal liability to third parties injured or whose property is damaged following an incident arising from the holding of an **Event**. This term includes official **Practice** and **Qualifying Practice** and associated activities necessary to an **Event** (such as setting up a course for a **Speed** or **Rally Event**). The cover additionally protects **Officials** (not necessarily officials of an **Organising Club**), or **Sponsors** of an **Event** or of **Races** or **Championships**, within the **Event**. **Competitors** and **Venue** landowners are also covered *but not one* **Competitor** *claiming against another* **Competitor**.

4. What is Protected?

4.1. **Events** arranged by **Clubs** held under an **ASN Permit** or **Certificate of Exemption**.

4.2. **Marshals'** training days are covered subject to prior notification being made to and approval given by the **ASN**.

4.3. Approval may be given for the demonstration of **Vehicles** subject to a specific application being made and written approval being given by the **ASN** but only where such activity is authorised under the terms of the **Event Permit**.

5. What is not Protected?

5.1. **Events** not held under **Permit** or **Certificate of Exemption** are not covered, neither are any **Record Attempts** nor activities other than the normal **Competition**.

5.2. As part of the Master liability policy member **Clubs** are covered for their legal liability to third parties arising from their social activities. These activities encompass social evenings, award ceremonies and other like gatherings. This extension DOES NOT cover claims arising from the following:

a. Hazardous and dangerous activities (except in an attempt to save human life).

b. Use of pyrotechnics and explosives.

c. Overseas activities.

d. Participation in actual **Motorsport Competition**.

e. **Commercial** activities on behalf of the Promoter for gain/profit excepting raffles and prize draws or similar.

f. Employers Liability and Errors or Omissions.

g. Liability for bona fide sub-contractors.

h. Claims more specifically insured by the other existing policies.

i. *Damage to **Vehicles** used by the **Organisers** is not covered.*

j. The policy provides no protection in respect of aviation incidents.

5.3. Liabilities arising from the use of **Vehicles** on the public road are not insured under the public liability policy. If this cover is required application should be made to Marsh Sport who will be able to offer facilities to insure the exposure.

5.4. **Events** abroad are not covered without special arrangement and approval being sought through Marsh Sport.

Insurance policies are subject to specific terms and conditions. If there is any doubt at all whether any activity or aspect of cover is insured or not it is important that you refer to Marsh Sport for clarification.

6. Are Competitors Covered?

6.1. The term **Competitor** is used in its widest sense to describe **Drivers**, **Entrants**, **Sponsors** of individual **Competitors** / **Entrants** and where appropriate **Passengers**.

Where an **Event** occurs on private land, i.e. where the insurance provisions of the **Road Traffic Act** do not apply, **Competitors** are protected by the **ASN Master Policy** public liability insurance.

6.2. It is impractical for the **ASN** to provide **Competitors** with cover where any part of an **Event** takes place on the **Public Highway** in circumstances to which the **Road Traffic Act** applies. To cover liability under the **Road Traffic Act**, **Competitors** are expected to make their own arrangements by the extension of existing motor policies. However, Marsh Sport are able to assist **Clubs** organising **Rallies** to provide **Road Traffic Act** cover.

However, this insurance does not protect **Competitors** in respect of liability to mechanics or other helpers forming part of the same **Entry** nor do they protect mechanics, **Entrants** or **Sponsors** in respect of claims by the **Driver**.

*Claims by one **Competitor** against another competing in the same **Competition** at an **Event** are excluded.*

*Damage to participants **Competition Vehicles** whether caused during periods of **Competition** or otherwise is not covered.*

7. Are Landowners Covered?

7.1. The **ASN Master Policy** indemnifies landowners in respect of their potential legal liability to third parties following an incident in connection with an **Event** for which they have loaned the use of their land. This indemnity is to deal with the risk that an allegation is made after an incident that the cause was due to some defect in the landowner's premises.

7.2. The **ASN** public liability policy will only normally pay for damage to a landowner's property if it is considered that the club has been in some way at fault and has a legal liability.

7.3. The policy is specific in *not* providing cover for damage to safety barriers, marshal posts, other course installations and damage to road and land surfaces.

8. Contractual Liability?

8.1. Contractual Liability is the term used in Insurance policies to indicate an obligation accepted by one of the two contracting parties which goes beyond the position that would exist otherwise under the common law of negligence. Insurers exclude such obligations because they do not wish to be bound under their policy by any prior commitment unless they have been given notice of the commitment and agreed to it. Please refer to Marsh Sport for any specific clarification.

8.2. If obligations are undertaken under contract in respect of damage to other property e.g. hired public address equipment, armco barriers or advertising hoardings then the liability cover offered under the **Master Policy** will only operate to the extent to which it is judged you may have a legal liability under the common law in negligence.

8.3. Under normal circumstances any extension of cover will not include inevitable damage to road and land surfaces. **Clubs** are expected to take reasonable measures to protect vulnerable property, especially any property of high value which might be subject to damage.

9. Medical Malpractice

9.1. The Master Liability policy is automatically extended to provide medical malpractice cover for volunteer Junior Doctors and paramedics registered with the HCPC and volunteer medical assistants including nurses registered with **Motorsport UK**, attending **ASN** authorised **Events**. The limit of indemnity is £10,000,000 in the aggregate and the cover is subject to a deductible amount of £500 each and every claim.

kingfisher
Motorsport

Motorsport Insurance Specialists

Supporting your passion both on and off the track with tailored insurance solutions.

- Motorsport Motor Trade Combined
- Road Insurance for Rally Cars
- Support Vehicles
- Storage and Transit cover
- Personal Accident and Travel
- Multi-vehicle policies available
- Cover for Competition Cars including Road Sections

Ready to get a quote? **Contact us today on:**

0115 965 1040	0115 965 1050
For grassroots individuals and professionals	For motorsport motor traders and supporting businesses

Kingfisher Motorsport is a trading name of Kingfisher Insurance Services Limited, registered in England No 01469545. Kingfisher Insurance Services Limited is authorized and regulated by the Financial Conduct Authority (FCA) No 310218. Registered office: First Floor 2 Parklands, Parklands Business Park, Rubery, United Kingdom, B45 9PZ. DOCIDM581

10. Public Liability – Action Plan

10.1. In order that clubs may be certain that cover is in place for any given event the following are the steps that are to be taken:

a. Apply to the **ASN** for an appropriate **Permit** or **Certificate of Exemption**.

b. Consider if specific advice is needed from Marsh Sport in respect of:

- Activities other than normal competition, or those Specifically approved by the **ASN**
- Contractual liabilities incurred to property owners or landlords
- Where cover under the **Road Traffic Act** is required.

c. If special exposures to risks not covered in the standard **ASN** liability insurance exist such as in **b. above** then full details should be made available to Marsh Sport in good time for them to respond on the nature of the cover required and its costs.

11. Claims

11.1. In the event of any incident involving injury to a spectator or official, or damage to third party property, a full report must be made to the **ASN** as soon as possible. There must be no discussions or correspondence whatsoever regarding the incident other than to confirm that the facts are being reported to the **ASN**.

11.2. Delay in reporting could result in the **Insurer**'s refusal to deal with a claim if their position had been prejudiced by delayed notification or by settlement or commitment having been made. In the unlikely event of an injury being fatal.

The incident report must be made by telephone, at the earliest possible opportunity.

These requirements also apply to serious or potentially fatal incidents.

11.3. In the case of incidents involving spectators or their property it is important that the names and addresses of any witnesses are obtained and also those of **Marshals** stationed in the vicinity of the incident.

11.4. After an incident organisers or individuals may receive a letter from a solicitor which should take the form of 2 copies of a 'letter before action'. Such letters should not be acknowledged or replied to but must immediately be sent to the **ASN Legal Department**. Insurers will then have 21 days to acknowledge receipt of the 'letter of action' followed by a period of 90 days to investigate the claim and make a decision on liability.

11.5. Failure to meet these deadlines can result in judgment by default with the attendant adverse penalties and cost accruing to the defendant.

12. Personal Accident

12.1. The duties of many **Officials** take them close to the "scene of the action" and consequently into an area of relatively greater risk. **Officials** voluntarily carry out their duties and legally thereby accept the additional risk inherent in the duty which limits any remedy at law available to the official should injury occur.

13. Officials

13.1. Recognising the risks freely accepted by participants the **ASN** has effected Personal Accident insurance applying at **Events** held under **Permit** or **Certificate of Exemption**. Personal Accident policies pay the pre- agreed levels of benefit to persons injured if an incident occurs within the terms and conditions of the policy.

14. Who is Covered?

14.1. All signed-on **Officials** and **Volunteer Officials** at **Events** held under **Permit** or **Certificate of Exemption**, including set-up and dismantling. The signing-on of all **Officials** at **Events** is extremely important in that one of the purposes of this is to identify a person as an Official of the **Event** and consequently establish the right to benefit under this Personal Accident policy. Cover for **Officials** include travelling directly from home to an **Event** and directly back home again from the **Event**.

15. What are the Benefits?

15.1. The benefits payable under the Personal Accident Policy are detailed on the Marsh website.

16. Competition Licence Holders

16.1. In addition to covering **Officials** the **ASN** has arranged automatic cover for **Competition Licence Holders** (with the exception of **RS Clubman Licence Holders** for whom **Personal Accident** cover is not automatically included).

16.2. Subject to **Art.16.1**, **Personal Accident** insurance cover for **Competitors** is valid from the date of issue of the **Competition Licence** or the **First of January** of the relevant licence year, whichever is the later. It is operative during any **Competition** and / or official **Practice** session at an **Event** run under a **Permit** issued by the **ASN** or for which a **Certificate of Exemption** has been issued or run in accordance with the **International Sporting Code** of the **FIA**, under the authority of an **FIA** recognised **ASN**.

16.3. All signed-on **ASN Competition Licence** holders (with the exception of **RS Clubman Licence Holders** for whom **Personal Accident** cover is not automatically included) at **Events** held under a **Permit** or **Certificate of Exemption**. The cover applies while signed-on or for any International or **National Event** held in accordance with the relevant provisions of the **FIA International Sporting Code**.

17. What are the Benefits?

17.1. The benefits payable under the **Personal Accident Policy** are detailed on the Marsh website.

17.2. The standard benefits provided by the **ASN** under this policy may be enhanced at favourable terms by direct application to Marsh Sport.

18. Who is Covered?

18.1. All signed-on **ASN Competition Licence** holders at events held under a **Permit** or **Certificate of Exemption**. The cover applies while signed-on or for any **International** or **National Event** held in accordance with the relevant provisions of the **FIA International Sporting Code**.

General Notes

The following are general points where experience has shown it is helpful to give guidance to members.

19. Competitors or Clubs competing abroad

19.1. It is recommended that **Competitors** or **Clubs** competing abroad review their insurance arrangements, with Marsh Sport.

20. Foreign Competitors in the UK

20.1. The **National** Health Service has financial restrictions on treating some foreign nationals after an incident. Unless the country of origin has an agreement with the UK, foreign competitors are strongly recommended to take out medical insurance before competing here. **Organisers** should draw this to the attention of foreign competitors.

21. Social Events

21.1. The **ASN** Master Policies provide cover for some club social activities.

Up to 15% off for club members!

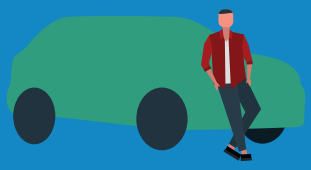

Standard Cars

Classic Cars

Motorsport

Vans

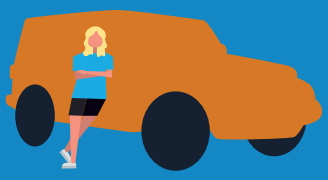

4x4s

Motorhomes & Campervans

Specialist Insurance Deals from Adrian Flux

See how we measure up, call us on **0344 381 7539** and you could get a cheaper quote compared to online

At Adrian Flux we have over 50 years experience tailoring insurance to suit your specific needs. We don't believe in "one size fits all" when it comes to insurance, which is why you could save time and money by calling a member of our team directly.

Don't forget to ask about our new reduced rates, breakdown cover and many other ways we can reduce your premium!

Ask our experienced staff about:

- ✓ **Multi vehicle discounts**
- ✓ **Agreed valuations**
- ✓ **Limited mileage discounts**
- ✓ **Club member discounts**
- \+ **Plus much more**

Call our UK team on 0344 381 7539

50 YEARS OF EXCELLENCE

adrianflux.co.uk

Authorised & regulated by the Financial Conduct Authority

ADRIAN FLUX

Insurance for the individual

22. Marshals' Training

22.1. **Marshals'** training days are, subject to prior notification and approval by the **ASN**, covered under both the Public Liability and the Personal Accident (officials) Policies without charge. The **Organisers** are required to obtain a **Certificate of Exemption** from the **ASN**.

23. Standard Motor Policies

23.1. A Standard Motor Policy issued in the UK market excludes use for "racing, pacemaking, reliability trials, speed testing or rallies". While the **Competitor** may be able to obtain extension of a relevant policy this is a matter for individual negotiation between the **Competitor** and their insurer.

23.2. Any **Competitor** in any **Event** that involves use of the public highway should, in their own interest, pay particular attention to insurance. The **Competitor** should always, before entering an **Event** involving use on the public highway, obtain confirmation from their insurers that their normal policy operates. Where **Rallies** or **Trials** include special tests full details of these tests should be submitted to the **Insurer**.

23.3. **Competitors** are reminded of the Declaration they are required to make when entering an **Event**. Facilities are available to **Clubs** to provide short period third party liability cover to **Drivers** in **Rallies** through Marsh Sport.

24. Events on Public Roads

24.1. **Road Rallies:**
In respect of **Road Rallies** timed to less than a minute, the higher rate detailed in **Ch.1 App.3** does not apply in respect of **Regularity Events** or **Events** where one **Section**, not exceeding 10 miles in length, is included solely for the purpose of tie deciding.

24.2. **Closed Road Events:**
Competitor's legal liability cover can only be given for **Events** run on closed public roads when such roads are closed by a properly enacted **Order** made under the authority of a statute permitting the closure of a public road or roads for the purpose of a **Competition**, whether such **Competition** involves simultaneous **Competition** or timing against the clock and suspending the operation of normal Road Traffic Legislation.

25. Insurance Fees

25.1. The quoted **Per Capita Permit Fees** are based on an **Event** of one day's duration. Insurers reserve the right to make an increased charge in respect of **Events** occupying more than one day to which the public is admitted, and a charge made or where **Competitions** counting towards the final result take place on each day. The **Per Capita Permit Fees** provide cover in respect of the **Permitted Competition** and official **Practice** sessions at the **Event**.

26. Officials working at Overseas Events

26.1. The **ASN** has now had agreement to cover UK licence officials when they are providing their services at overseas events subject to the following conditions:

a. They have notified the **ASN** in writing using the Overseas Insurance Application form of their intention at least 30 days prior to the event and the **ASN** has acknowledged accordingly.

b. The **Event** they are attending is sanctioned by the **ASN** of that country who like **Motorsport UK** are recognised by the **FIA** in that capacity. No cover is given for any non-affiliated events.

c. That the official shall take out their own travel insurance for any incidents that occur away from the **Event Venue**.

d. That the country where the **Event** is taking place is not on the sanctioned list (see **www.motorsportuk.org**)

e. In respect of officials attending **Events** in the United States of America or Canada, the cover is subject to restrictions as shown below.

27. Summary of Cover

27.1. Personal Accident

a. Cover will match the existing master arrangements in place for officials under the ASN master policy.

b. Cover would be secondary to any other valid cover or collectibles.

c. Medical Expenses and Repatriation benefit to £50,000 for all non-European exposure.

27.2. Third Party (Public Liability)

a. Cover will match the existing master arrangements in place for officials under the **ASN** master policy.

b. Cover would be secondary to any other valid policy.

c. The cover is strictly limited to Europe.

27.3. Professional Indemnity

a. Cover will match the existing master arrangements in place for officials under the **ASN** master policy.

b. Cover would be secondary to any other valid policy.

c. The cover is strictly limited to Europe.

CHAPTER 1

Appendix 4 - Competing Abroad

This brief outline is designed to help competitors and officials avoid problems which can be associated with competing at events overseas. Check our website for current information.

General

Use this checklist if you are planning to compete abroad:

- Is the **Event** on the **FIA International Calendar** (or the respective **ASN's National Calendar)**, otherwise it could be a long trip for nothing.
- Have you got the right **Competition Licence** (**International Driver** and **Entrant Licence** or **EU Licence** as appropriate)
- If you are taking any banned substance on the current WADA list, a TUE is only required PRIOR to competition for **Drivers** who are competing in **FIA International Events**. Please contact the **ASN** for further instructions.
- Have you 'permission to start'. Entry Forms often require the stamp of approval of your **National Sporting Authority (ASN)**. Your **International Licence** is also your 'Visa' authorising you to compete abroad. In case of doubt, the **ASN** can always stamp your entry form but do not leave it until the last minute before the closing date for entries.
- Is / are your **Licence(s)** signed.
- Do the **Regulations** call for you to take passport size photographs for **Event** identification.
- Do the **Organisers** require any specific paperwork, identification or information.
- Do you have the right **Homologation** / identity papers / Competition Car Log Book.

1. European Events

1.1. Holders of National or **International Licences** may compete in Events that are published on the respective **ASN**'s **National Calendar**. They do so under the regulations for that **Event** and under the jurisdiction of the appropriate **ASN (National Sporting Authority)**.

1.2. These Events will not be on the **International Calendar**.

2. Travelling Arrangements

2.1. Travelling abroad to compete can be very rewarding, but participants should take the time to be aware of, and prepare for, all the requirements, including required documentation, when taking **Competition Vehicles** and spares across international borders.

2.2. Ensure any required carnets are in order.

3. Personal Arrangements

3.1. Take your **Driving Licence** even if you are the **Co-Driver**; many foreign countries insist on seeing this whether you are intending to drive or not. You may be refused the start without it.

3.2. Find out if the countries you are visiting require an **International Driving Permit**.

3.3. It is essential to have **Green Card Insurance** to protect yourself. In some countries an additional 'Bail Bond' cover is essential. (NB UK Third Party Fire and Theft cover is not necessarily valid abroad.) Always check with your motor insurer that your UK cover is valid in the country you are visiting.

3.4. Take the **Vehicle** registration documents or an authority from the vehicle owner that you are entitled to be driving it (eg in the case of a company vehicle).

3.5. Particularly with large or trailered vehicles, check that you are allowed to travel on the roads during

weekends or public holidays (eg in France, Italy and Germany).

3.6. Find out if you need a Travel Visa for the countries you are visiting.

3.7. Include your 'UK' plates.

3.8. Check which, if any, inoculations are necessary for each country you are visiting.

3.9. Take out Medical Insurance that covers you during an event as well as before and after.

3.10. Check what emergency equipment you need to carry. Bulb kits, fire extinguishers, warning triangles, breath alcohol testers and reflective clothing for example are mandatory in many countries.

3.11. Make sure your vehicle's lighting complies with the requirements for the countries visited.

4. Vehicles / Spares

4.1. Check the **ASN** website for current information on this topic as we collaborate dynamically with HMRC and Border Force.

4.2. When crossing any international border, particularly outside the EU, ensure you can account for all equipment, including trailers, trailered vehicles and spares. This should be done on entry and exit. Customs officers will need to ensure that you take out what you took in and any missing items are considered as having been sold and therefore could be liable for tax.

4.3. Some countries accept a list of equipment and spares deposited on arrival and cleared on departure at the same post (if you are sensible). Other countries, particularly, in the case of **Race Vehicles** and trailered equipment, may require formal 'Carnet' documents with Bank Guarantees to the value of the equipment.

4.4. Lack of paperwork on arrival at a customs post could mean a fine in addition to delays. Even clearing Customs on entry without being checked does not mean you are clear; you will have to exit the country and you also may be subjected to roadside checks.

4.5. In general the more paperwork you carry the better. It can help to have paperwork for the event or evidence of an invitation or acceptance to compete to reassure Customs that your visit is genuine.

4.6. Take duplicates or copies of all papers with you, and perhaps copies of the original invoices for the vehicles and spares to reduce the possibility of a VAT investigation on re-entry into the UK.

4.7. Carnet de Passage where required and more information can be obtained from: The RAC, The AA, Chambers of Commerce (ATA Carnet), Freight Transport Association (Owner Document Road Permit), HM Revenue and Customs. The motoring organisations may be able to offer both Personal and **Vehicle** Protection bonds in case of accident. Check out their schemes.

5. Community Movement Carnets

5.1. These are no longer required for movement between and through countries which are full members of the EU. This does not mean that you won't be stopped and asked to explain exactly what you have on board, so it is still a good idea to have some form of documentation to prove ownership.

Chapter 2

Judicial

CHAPTER 2 - JUDICIAL

This Chapter is separated into the following appendices:

App.1 General Breaches

App.2 Schedule of Penalties and Who May Apply Them

App.3 Judicial Procedures at Events

App.4 Appeals

App.5 Judicial Proceedings before Championship Stewards

App.6 Judicial Proceedings before the National Court

App.7 National Court Practice Direction

App.8 Breaches of Technical Regulations

App.9 Protest procedure

App.10 Right of Review

App.11 Fees and Fines and Obligations

App.12 Penalty Points

Ann.A Time and Place Penalties

1. Judicial matters

1.1. Any breach of the **NCR** may be the subject of **Judicial** proceedings and may be subject to a penalty at the instance of the **Clerk of the Course** or the **Stewards of the Event** or **Championship Stewards** as provided in **Championship Regulations** or the **National Court**. A **Right of Review** may exist – see Art.1.13. below and App.10 to this Chapter.

1.2. General breaches of the **NCR** are set out at App.1. This list is not exhaustive and the entire NCR shall apply in respect of breaches.

1.3. The penalties that may be applied and who may apply them are set out in App 2. Certain breaches automatically attract penalty points in accordance with App.12.

1.4. The **Judicial** proceedings at an **Event** are specified in and shall be conducted in accordance with App 3 except:

1.4.1. That the regulations for the British Touring Car Championship are permitted to vary the judicial procedures to enable as follows:

a. In respect only of driving offences listed under Ch.2 App.12 Art.1.2 in order that **Penalties** not referred to in these **NCR** may be imposed including but not exclusively deduction of **Championship Points** as a consequential **Penalty**.

b. So that the structure of **Appeals** and consequential procedures permitted by the applicable **Championship Regulations** may be varied from that contained in these **NCR.**

c. So that in limited technical categories (as notified annually to the **ASN**) eligibility **Decisions** may be appealed to the **Stewards of the Event** with right of continued **Appeal** to the **National Court** preserved.

i. In the above event the current British Touring Car **Championship Regulations** will replace the part or parts of these **NCR** that have been varied.

1.4.2. That subject to the approval of the **ASN**, a British titled **Championship** may vary the judicial procedures contained in the **NCR** to allow the **Stewards of the Event** to act as the first **Judicial Body** in all **Judicial** proceedings by the applicable **Championship Regulations**:

a. Offences reported by **Judges of Fact** will be reserved under the powers of the **Clerk of the Course**, specifically excluding judgements of fact regarding **Technical Regulations** which

will be referred to the **Stewards of the Event**.

b. The **ASN** may approve any variation provided in Art.1.4.1. a. - c. above at their discretion.

1.5. Where an **Appeal** against a **Judicial Decision** at an **Event** is permissible it shall be conducted in accordance with App 4.

1.6. Breaches of **Championship** or **Series** sporting regulations shall be dealt with in accordance with their terms incorporating the **NCR** as to **Appeals** where permissible and the provisions relating to **Championship Stewards.**

1.7. **Championship Stewards** proceedings shall be in accordance with App 5 and **Appeals** against their **Decisions** in accordance with App 6 and 7.

1.8. Breaches of a non-**Championship** or **Series Event** sporting regulations shall be dealt with in accordance with their terms incorporating the **NCR** as to **Appeals** where permissible including **Appeals** against a **Judicial Decision** at an **Event**.

1.9. **Appeal** Fees and obligations relating to **Fees** and **Fines** are set out at App 11.

1.10. The **Judicial** proceedings before the **National Court** including **Appeals** against a **Judicial Decision** at an **Event** and against the **Decisions** of **Championship Stewards** are specified in App 6 and shall be conducted in accordance with the **National Court Practice Direction** at App 7 and which specifies the powers and authority of the **Court.**

1.11. Breaches of **Technical Regulations** at all **Events** shall be conducted in accordance with App 8 and where an **Appeal** to the **National Court** against such a **Decision** is permissible then in accordance with App 6 and 7.

1.12. There can be no **Appeal** against a **Decision** of the **National Court** but the **Court** has a **Right of Review** as provided at App 10.

1.13. A **Right of Review** exists in respect of any significant wholly new and relevant element relating to **Decisions** of the **Clerks of the Course** and where applicable the **Stewards of the Event** or the **Championship Stewards** or the **National Court** and at the instance of the **ASN** in accordance with App 10.

1.14. The **ASN** may at its entire discretion refer any matter to the **National Court** for the purposes of **Inquiry** and the time limit for doing so is 60 days from the date of the issue coming to the attention of the **ASN.**. The principles of such investigations or **Inquiries** are set out in the **National Court Practice Direction** at App 7.

1.15. The **ASN** has the authority to suspend any **Licence** or **Registration** issued by it or to decline or suspend the right to apply for or hold any such **Licence** or **Registration** regardless of whether or not that suspension is for the purposes of any referral to the **National Court** but shall state its reasons for doing so.

1.16. One **Competitor** may lodge a **Protest** against any other **Competitor** in the same **Event**. It is not permitted to lodge a single **Protest** against multiple **Competitors** and where a **Competitor** wishes to **Protest** multiple **Competitors** then individual **Protests** and **Fees** must be lodged. The **Protest** procedure is at App 9. **Protest Fees** are set out in App 11.

1.17. In accordance with the overriding principle of sporting fairness all **Judicial Decisions** and **Protests** require proof of specific regulatory breach the degree of proof is the balance of probability – what is most likely to have occurred. A breach shall not be inferred without adequate proof.

1.18. In respect of App 8 in all technical matter **Judicial** proceedings it is the obligation of the **Competitor** to prove the compliance of the **Vehicle** or component.

1.19. A **Judgement of Fact** as to eligibility must be reasoned and made in writing as a **Non-Compliance** report in accordance with App.8 Art.1.8 and a **Judicial Decision** based on such a report can only be appealed to the **National Court**.

1.20. If any **Non-Compliance** report is not reasoned it shall have no validity. App 8 applies.

1.21. At certain categories of short circuit **Kart Race Event** (see Ch.18) the **Stewards of the Event** shall act as the only **Judicial** body and it is not permissible to **Appeal** against a conviction for any breach of **Driving**

Standards obligations or an **Eligibility Decision** made in accordance with **Art 1.19.** above.

1.22. Except as may be permitted by the **ASN** the **Judicial Procedures** in respect of **International Events** on the **International Sporting Calendar** shall be conducted in accordance with the **Code** and its **Appendices** including the **Judicial Rules** and **Practice Directions of the International Court of Appeal** and of the **International Tribunal** (see: **www.fia.com**).

1.23. **Clerks of the Course** and all **Stewards** have the authority to correct clerical errors in their **Decisions** after publication of the **Decision** provided that the meaning of the **Decision** is not thereby altered. The correction of such errors does not affect the commencement time of any **Appeal** period which shall remain as that applying to the original **Decision.**

2. Control of Drugs and Alcohol

2.1. Any Person who fails prescribed limits or evades or refuses to comply with testing procedures for Anti-Alcohol Testing, Anti-Doping Testing or Illicit Drugs testing will have their **Licence** and/or all activities within **ASN Permitted Events** suspended pending further investigation and will be required to leave the **Permitted Event Venue.**

2.2. Any person found in breach of the permitted limits may be referred by the **ASN Legal Department** to the **National Court** as disciplinary proceedings.

Anti-Doping and Alcohol Regulations

2.3. The **ASN** has adopted the UK Anti-Doping rules published by UK Anti-Doping (or its successor) as amended from time to time. Such rules shall take effect and be construed as Regulations of the **ASN**. The UK Anti-Doping Rules are available at www.ukad.org.uk and the WADA Prohibited List is available at www.wadaama.org or from the **ASN** on request. It is the responsibility of each **Licence Holder** to ensure that they are fully familiar with the UK Anti- Doping Rules and the WADA Prohibited List. The **FIA** Anti-Doping Regulations will apply in respect of any **International Event.**

2.4. The **ASN Anti-Doping and Alcohol Policy** is published on the **ASN** website. It is the responsibility of each **Licence Holder** to ensure that they are fully familiar with the **ASN Anti-Doping and Alcohol Policy** and **Guidelines.** The **FIA Regulations** will apply in respect of any **International Event.**

2.5. Entrants must respect that the **ASN** have the right to require alcohol and illicit drugs testing on any Person howsoever connected with any **Entry** operating within an **ASN Permitted Event** and who shall at all times cooperate fully with the relevant procedures. These procedures are in addition to and not in substitution for any procedure undertaken by or at the instance of UK Anti-Doping.

3. General Conduct Regulations

3.1. The **ASN** requires as a condition of holding any **Licence, Registration** or other permission issued by it as **ASN** that all such **Licence Holders** and permittees shall:

a. Abide by **ASN National Competition Rules**, Policies and Guidelines.

b. Respect the decisions of **Event Officials**.

c. Treat all **Competitors, Marshals** and **Officials** equally with respect.

d. Maintain the highest standards of driving behaviour.

e. Conduct themselves in a proper manner at all times and always behave in the best interests of UK motor sport.

f. Make every effort to minimise the impact of their activities on the environment around them.

3.2. All **Competitors** by applying for and obtaining a **Licence** from the **ASN** and by **Entering** and competing in any **Race** and / or **Championship Event** or other **Event** which relies upon the **Competitor** holding an **ASN Licence** undertake to respect and comply with all Codes of Conduct published by the **ASN** in relation to their general behaviour and conduct and of those connected to their **Entry** or participation including engagement with any social media platform all which codes are hereby given **Regulatory** effect. Any breach of this **Regulation** may lead to suspension of **Licence** by the **Stewards of an Event** or the temporary or permanent suspension and / or withdrawal of any **Competitor's Licence** by the **ASN** and / or referral to the **National Court.**

4. Disqualification from Holding a Road Driving Licence

4.1. **Automatic Withdrawal of ASN Licence.** Any person who is disqualified from holding or obtaining a road driving licence - under the Road Traffic Act (RTA) or under the laws of any jurisdiction within the United Kingdom or its Crown Dependencies (including, but not limited to, Jersey and Guernsey) or any equivalent provision in any other jurisdiction ('Road Driving Licence') - shall have their **ASN** Licence(s) for any **Relevant Roles** automatically withdrawn for the duration of that disqualification, in accordance with **Ch.6 Art.3.2** and / or **Ch.1 Art.1.7.**

4.1.1. For the purposes of **Art.4.1** above, '**Relevant Roles**' is defined as:

a. Any Competition Licence;

b. A Clerk of the Course and/or Steward Licence;

c. An ARDS / ARKS / AHASS / BARS Instructor Licence;

d. Any role at a Permitted Event that may require the person to drive.

4.1.2. By way of exception to **Art.4.1** and **Art.4.1.1**, **Clerks of the Course** and **Stewards** shall not be subject to automatic withdrawal of Licence where any Road Driving Licence disqualification arises solely from the accumulation of penalty points, provided that none of the contributing convictions were for driving under the influence of alcohol or drugs or for any equivalent alcohol- or drug- related driving offence.

4.2. **Mandatory Self-Reporting Obligation.** Any person subject to such a disqualification must immediately notify the ASN of the disqualification and surrender their ASN Licences without delay.

4.3. **Failure to Report.** Failure to self-report such a disqualification shall be considered a breach of these Regulations and may result in:

a. Immediate interim suspension of ASN Licence

b. Restriction from attendance at Permitted Events;

c. Referral to the National Court; and

d. A sanction of up to twice the length of the original road-driving disqualification.

4.4. **Suspension Period.** The suspension shall be effective from the date of disqualification from holding a road licence and shall remain in effect until the date the right to hold a road licence is legally reinstated.

4.5. **Right of Appeal and Mitigating Factors**

a. An individual subject to a suspension under this regulation shall have the right to appeal to the National Court, subject to b. and c. below, in accordance with the Judicial Procedures - see Chapter 2 and Road Driving Licence Disqualification Appeals Document on the **ASN Website**.

b. For the avoidance of doubt, suspensions arising directly from Road Driving Licence disqualifications, which result in the suspension of an ARDS, ARKS, AHASS or BARS Licence, are not appealable.

c. Where the underlying disqualification is imposed for offences which as part of their definition require dangerous driving, or driving whilst under the influence of alcohol and/or drugs or their equivalent in other jurisdictions to be proven, no right of appeal shall apply in respect of all relevant Licences.

d. It shall not be considered a mitigating factor or extenuating circumstance at Appeal that the

disqualification or resulting licence suspension causes:

i. Financial hardship;

ii. Reputational harm;

iii. Employment or career consequences; or

iv. General disruption to personal or professional life.

4.6. **Evidence and Enforcement.** The ASN reserves the right to request formal documentary evidence of the disqualification and its expiry. Failure to comply may result in continued suspension or further disciplinary action.

CHAPTER 2 JUDICIAL

Appendix 1 - General Breaches

a. Each of the Articles within this Appendix, in addition to any offences specifically referred to elsewhere within the **NCR**, is a breach of these **NCR** and/or Supplementary Regulations and will lead to disciplinary action being taken.

b. Any breach of the **National Competition Rules** may be referred to the **National Court**.

c. Unless stated otherwise offences or infringements include any attempt to commit an offence or infringement and are punishable whether committed intentionally or through negligence.

d. Any natural or legal person associated with the **Entry** of a **Competitor** and any **Official** or **Organiser** who takes part in an offence or infringement whether as instigator or as accomplice is also punishable.

e. The **ASN** has the discretion to suspend any **Licence** or **Registration** issued by it or to suspend any recognition in the **ASN Territories** of a **Licence** or **Registration** issued by another **ASN** whether permanently or pending any referral to the **National Court.**

1. Offences

1.1. Abusive language or behaviour, physical assault or threat of assault at any **Competition** or **Event** or in connection with motorsport generally not falling under **Art. 1.16** below.

1.2. Any form of racism or other discriminatory conduct towards any person or body or group of living persons including spoken and written words or gesture not falling under **Art.1.1** and/or **Ch.2 Art.3.**

1.3. Any dishonest act or proceeding in connection with any **Competition** or **Event** or motor sport generally.

1.3.1 Any allegation of, or suspected case of, dishonesty shall be referred exclusively to the **National Court** and shall not be dealt with by the **Officials** at the **Event**. For the avoidance of doubt, nothing in this **Regulation** shall prevent the **Officials** from taking appropriate action, or otherwise dealing with, any other breach of the **NCR** (other than the dishonest element) arising out of the same incident or the surrounding circumstances/facts.

1.4. Making a false declaration for the purposes of participation of a legal person or any vehicle in an **Event Permitted** by any **ASN**.

1.5. Acting prejudicially to the interests of the **ASN** or the **FIA** and or motorsport generally.

1.6. Being suspected of or being in contravention of any **Regulation** relating to alcohol or doping or illicit drugs including any testing requirements or obligations.

1.7. Dishonouring or howsoever failing to pay when due any sum of money payable to the **ASN** or **any Recognised Club** or **Organiser** or to any supplier of goods.

1.8. Directly, indirectly or through any third party for any **Entrant** or **Official** or **Organiser** or representative of such a person to place any bet on the outcome of any part of a **Competition** or **Event** in which they are taking part.

1.9. Directly or indirectly or through any third party for any **Entrant** or **Official** or **Organiser** or representative of such a person to make use of any **privileged information** for the purposes of seeking financial gain or causing loss by placing any bet on the outcome of any part of a **Competition** or **Event** in which they are not taking part.

1.10. To falsify or withhold from the **ASN** or any statutory authority information in relation to a breach of **Art. 1.8**. and or **1.9** above.

1.11. To make a false declaration in connection with obtaining a **Licence** from the **ASN** or any **ASN** or the **FIA** including withholding or suppressing any material medical information as required from time to time by the **NCR**.

1.12. Abandoning one **Event** after making an accepted **Entry** and then participating in another **Event** without having first withdrawn the first made **Entry.**

1.13. Driving in a manner incompatible with general safety, and/or departing from the standard of a reasonably competent driver.

1.14. Any contravention of Signals.

1.15. Breach of **Technical Safety Regulations** by a **Vehicle** manufacturer.

1.16. Misbehaviour or unfair practice.

CHAPTER 2 JUDICIAL

Appendix 2 - Schedule of Penalties and Who May Apply Them

1. Penalties under the NCR

a. Verbal warning

b. Written reprimand

c. **Fine**

d. Time or place or grid position or other penalty* where provided by the **NCR** or **Sporting Regulation**

e. Disqualification

f. Suspension of **Competition Licence**

g. Exclusion

h. **Motorsport Community Service** or such other condition penalty or obligation as the **National Court** sees fit.

* for example: a **Stop and Go** penalty or **Track/Course** limits penalty or a discipline specific penalty as provided.

Penalty **Definitions** restrictions and conditions are provided below at Art.7.

2. Clerk of the Course

2.1. The **Clerk of the Course** has authority to impose any penalties under Art.1 A-E and which shall be imposed only after a **Hearing** in accordance with App.3 *except* when applied while the **Competition** is taking place*.

2.2. The **Clerk of the Course** is authorised to refer to the **Stewards of the Event** any breach of the **NCR** or the Sporting Regulations where the **Clerk of the Course** has exhausted their powers and it is considered that further penalty may be appropriate.

2.3. The **Clerk of the Course** has a **Right of Review** as provided by App.10.

3. Stewards of the Event

3.1. The **Stewards of the Event** have authority to impose any penalties under Art.1 A-F above and which shall be imposed only after a **Hearing** in accordance with App.3 *except* when applied while the **Competition** is taking place on **Track** and the **Stewards of the Event** act as the relevant **Judicial** authority.

3.2. The power of **Suspension** vested in **Stewards** is limited to an interim **Suspension** for 30 calendar days for the purposes of any referral to the **ASN** under App.2 Art.6.1 of this Chapter.

3.3. The **Stewards of the Event** have a **Right of Review** as provided by App.10.

4. Championship Stewards

4.1. **Championship Stewards** are authorised to impose a penalty under Art.1 B, C and E above following a **Hearing** in accordance with App.5 and where **Disqualification** is limited to **Disqualification** from further participation in the relevant **Championship.**

4.2. The **Championship Stewards** have a **Right of Review** as provided by App.10.

5. National Court

5.1. The **National Court** is authorised to impose penalties under Art.1 A-H above and this includes at the **Court's** entire discretion the substitution of any or any additional penalty to any penalty previously imposed and whether on **Appeal** or **Inquiry** or under **Right of Review**. Any penalty may be suspended at the **Direction** of the **Court.**

5.2. The **National Court** has a **Right of Review** in accordance with App.10.

6. The ASN

6.1. All **Licences** are the property of the **ASN** and which may in its discretion withdraw any **Licence** or **Registration** issued by it or the entitlement to apply for such **Licence** or **Registration** but shall only do so on reasoned grounds.

6.2. A **Licence** or **Registration** may be suspended for the purposes of investigation by the **ASN** of any actual or perceived or potential breach of the **NCR** regardless of whether the matter is referred to the **National Court.** Accordingly the period of any suspension imposed by the **Stewards of the Event** under **Art.7** below may be extended by the **ASN** but would not normally extend beyond 60 days next following the **Event.** At all times the **Licence** or **Registration** is the property of the **ASN** and shall be surrendered on written demand of the **ASN** and this **Regulation** does not fetter the discretion vested in the **ASN** to withdraw any **Licence** or **Registration** under **Art.6.1** above.

6.3. This **NCR** applies to all Licence holders as to their conduct generally other than at a **Permitted Event** and / or to the Licence holder participating as **Competitor** or **Official** or Person in any **Event** sanctioned or **Permitted** by **FIA** or another **ASN** where such conduct may be considered to have been a breach of these **NCR** and or may have brought motor sport generally and / or the **ASN**, the **FIA** or any other **ASN** or its **Officials** into disrepute whether contrary to **App.1 Art.1.5** or otherwise.

6.4. All disciplinary suspensions of **Licence** or other form of **ASN** accreditation shall be published on the **ASN Suspensions Register** in the public domain.

6.5. All **Exclusions** shall be of **International** effect for the purposes of the **Code** and shall be notified by the **ASN** to the **FIA** and may be placed by the **FIA** on its relevant register in the public domain.

7. Penalty Definitions Restrictions and Conditions

7.1. **Time or place or grid position or other penalty:** as provided by **Annexe A to this Chapter**.

7.2. **Verbal Warning:** a warning to the **Competitor** as to their future conduct delivered directly by the relevant **Judicial** body.

7.3. **Reprimand:** a written admonishment of the **Competitor** in relation to their conduct delivered by the relevant **Judicia**l body. A Reprimand can only be imposed by the **Clerk of the Course**, **Stewards of the Event, Championship Stewards** or the **National Court**.

7.4. **Fine:** a monetary penalty imposed in writing on the **Competitor** by the relevant **Judicial** body as permitted by **Ch.1 App.2**. A **Fine** can only be imposed by the **Clerk of the Course, Stewards of the Event, Championship Stewards** or the **National Court.**

7.5. All **Fines** whether imposed under the **NCR** or **Sporting** or **Championship Regulations** are payable to the **ASN** and must be paid as cleared funds no later than 7 calendar days after the imposition of the **Fine**. The **ASN** shall distribute annually the proceeds of all **Fines** in the provision of prizes or training or for charitable purposes.

7.6. Non-payment as required by **Art.7.5** above shall result in the **Suspension** of the **Competitor's** (or other **Licensed** person's) **Licence** and may result in referral to the **National Court**.

7.7. **Disqualification**: a penalty imposed in writing by the relevant **Judicial** body disqualifying the **Competitor** from the relevant **Event** or part of an **Event** and its results and prizes and awards. Disqualification can only be imposed by the **Clerk of the Course, Stewards of the Event, Championship Stewards** (**Art.4.1 above** applies) or the **National Court**. This penalty may be imposed retrospectively by the **National Court.**

7.8. **Suspension:** a penalty imposed in writing by the relevant **Judicial** body or the **ASN** forbidding a person body or **Vehicle** from taking part in any **Competition** for a stated period.Suspension can be only be imposed by the National Court, ASN and exceptionally by the Stewards of the Event. When imposed by the **National Court** the **Suspension** may be restricted to certain categories or types of **Event**.

7.9. **Suspension** automatically voids all **Entries** made for any **Event** taking place during the period of **Suspension** and the relevant **Entry Fee** whether paid or payable shall be forfeit to the **Organiser** of that **Event.**

7.10. A **Licence** suspended must be returned immediately to the **ASN**. Where **Suspension** is imposed by the **Stewards** it shall be surrendered to them where possible, and forwarded by them to the **ASN**.

7.11. For breaches of **App.1 Art.1.1** involving abusive language or behaviour, physical assault or threat of assault, the matter shall be referred to the **Stewards of the Event.**

7.12. If the **Stewards of the Event**, after holding a Hearing, are satisfied that a contravention of **App.1 Art.1.13** was of a serious nature, and the maximum penalty of 30 days is imposed, the matter may also be referred by ASN to the National Court, who may impose a further penalty.

7.13. The **Stewards of the Event** shall consider the evidence provided and if the **Stewards of the Event** are satisfied there are such grounds they shall impose an immediate **Suspension** for a period of 30 days pursuant to **Art.3.2 of this Appendix** and shall refer the matter to the **ASN** respecting **Art.7.10** above.

7.14. **Exclusion:** this penalty is reserved exclusively to the **National Court** and is of **International** effect therefore shall be notified by the **ASN** to the **FIA**. **Exclusion** is an **Order** of the **Court** permanently forbidding the subject of the **Order** from all participation in any **Event** under the **NCR** or the **Code..**

7.15. **Suspension or Exclusion of a make of Vehicle**: The **National Court** may **Suspend** or **Exclude** a make of **Vehicle** pursuant to **App.1 Art.1.15 of this Chapter**.

7.16. **Loss of Awards**: a **Competitor** subject of **Disqualification** or **Suspension** or **Exclusion** shall thereby forfeit all rights to any placing or **Awards** in the relevant **Competition**. To the extent necessary the **Organiser** of the **Competition** shall publish amended **Results.**

CHAPTER 2 JUDICIAL

Appendix 3 - Judicial Procedures at Events

1.1. In addition to any other breach of these **NCR** the **Judicial Officials** at an **Event** shall deal with any allegation of misconduct at the **Event** by a **Competitor** or **Licensed Official** including but not exclusively swearing directed at another person at the **Event.** The **Stewards of the Event** may in their discretion refer the matter to the **ASN** for consideration of further penalty in addition to any penalty they deliver including under App.2 Art.3.2 (Suspension).

1.2. The overarching principle of all **Judicial Procedures** is the application of the principles of sporting fairness.

1.3. The burden of proof in all **Judicial Procedures** except for **Technical Regulation** breaches is on the party alleging the breach (including the **Protestor** in the case of a **Protest**).

1.4. In the case of **Technical Regulation** breaches (App.8 to this Chapter) including in relation to **Competitor Personal Safety Equipment** (Ch.9) the burden of proving conformity rests with the **Competitor**.

1.5. The standard of proof is the balance of probability – what is most likely to have happened.

1.6. In all cases involving a minor **Competitor** the parent or guardian or person holding the PG Licence must be present as should the **Safeguarding Officer ('SO')** whenever possible. In the case of any investigation by the **Stewards** for the purposes of App.1 Art.1.3 (alleged dishonesty) then the parent or guardian and the **Safeguarding Officer** must be present.

1.7. **Judicial Proceedings** may be recorded by **Officials** in the form of audio recording or moving images with sound and in either case the recording must be retained by the **Organisers** and delivered on demand to the **ASN**. Such recordings must be preserved for a minimum period of 61 days following the conclusion of the **Event** at which the proceedings took place.

1.8. A **Competitor** is not permitted to record the **Judicial Proceedings** and is not allowed an advocate. A minor should be accompanied by their parent or guardian or a designated **PG Licence Holder** and a person with additional needs may have a person present but in each case the reasonable expectation is that such person shall act 'as an interpreter' and shall not give evidence except as a direct witness of fact.

1.9. The **Competitor** must be notified of the time and place of the **Hearing.**

1.10. If the **Competitor** fails to attend the **Hearing** following notice then the **Hearing** may proceed in absence provided that the **Judicial** body is satisfied by evidence that the **Competitor** has been notified of the time and place of the **Hearing.**

1.11. The **Competitor** must be notified of the alleged breach and the evidence relied on.

1.12. Where the **Evidence** comprises or includes moving image evidence then the **Competitor** must have the opportunity to view that **Evidence** before being asked whether the breach is admitted or denied. Such evidence must be retained by the **Organisers** for a minimum period of 61 days.

1.13. The **Competitor** has the right to provide evidence in relation to the alleged breach and to call witnesses in support of the **Competitor's** case.

1.14. Where a **Competitor** is under judicial investigation for an alleged breach of driving standards and the **Competitor** alleges technical failure of the vehicle then the **Hearing** must be adjourned and the **Clerk** must instruct the **Scrutineers** to examine the vehicle and to report to the **Clerk.**

1.15. A record of the fact of the **Hearing** must be retained and a summary of the **Evidence** provided on the **Judicial Decision** form. The form must be included with the **Steward's Report** (if any) to the **ASN** of the **Event**.

1.16. The **Judicial Decision** must be notified to the **Competitor** but the **Appeal** period **(App. 4 of this Chapter)** does not commence until the **Competitor** has been notified in writing either in the hearing, by electronic notification or the time at which the **Decision** is posted on the **Official Noticeboard** whichever is the earliest in time. It is the responsibility of the Competitor to monitor the **Official Noticeboard.**

1.17. There is no **Right of Appeal** against either the decision for imposing a **Drive Through** or **Stop and Go** penalty or the penalty itself even if it is converted to a time penalty in accordance with **Ch.12 App.10**.

1.18. No **Appeal** is permitted against the **Decision** of the **Stewards of the Event** at a short circuit **Kart** race **Event**

1.19. The lodging of an **Appeal** against a **Decision** of the **Clerk of the Course**, or the giving of **Notice** of **Intention to Appeal** against a decision of the **Stewards** of the **Event**, does not suspend any penalty that may have been applied or endorsed, during the **Event** out of which the decision has arisen.

1.20. After the conclusion of the **Event** out of which a **Decision** has arisen, if **Notice of Intention** to **Appeal** against a **Stewards**' decision has been given, the operation of any sentence or decision will be suspended until the disposal of the **Appeal** by the **National Court**. If a sentence of **Suspension** is upheld, the **Competitor** concerned will be disqualified from the results of any **Competition** in which he has competed pending the hearing of the **Appeal**. In coming to a judgment, the **National Court** can take into account any benefit the **Appellant** may have gained through appealing.

1.21. Where a **Judicial** matter is referred to the **Stewards of the Event** then the foregoing articles of this Appendix apply equally to those proceedings.

1.22. Where a **Judicial** matter arises in the context of a **Championship** with future **Events** yet to occur then the **Stewards of the Event** have the authority to delegate responsibility for the conduct of any **Judicial Proceeding** before them to an alternate panel of **Stewards** at a designated subsequent **Event** but must do so in writing and a copy of that delegation must be included in the **Event** report to the **ASN**.

1.23. **Stewards of the Event** who suspend a **Competition Licence** must give a statement of reasons and which must be copied to the **Competitor** and submitted to the **ASN** with the **Event** Report to the **ASN**.

Appendix 4 - Appeals

This Appendix applies generally to all Appeals arising under the NCR. For Appeals proceeding to the National Court, parties must also refer to **Ch.2 App.7** (National Court Practice Direction), which governs the applicable procedures and requirements. For Short Circuit Karting-specific judicial provisions, reference should also be made to **Ch.18 App.6**.

Appeal. A challenge lodged pursuant to Ch.2 by an **Entrant** or **Competitor** within specified time limits and made against a decision, act or omission made by an **Official** of an **Event**. An **Appeal Scale Fee** is payable to the **ASN** in accordance with Ch.1 App.2. In the case of an **Appeal** being made against a decision, the **Entrant** or **Competitor** involved must have been either:

- A party directly involved in the incident giving rise to the decision, or
- A Party directly involved in the original incident giving rise to the decision which has subsequently been the subject of a further Appeal, or
- The party who lodged the **Protest** which resulted in the decision, or
- The party against whom a **Penalty** has been imposed.

For the avoidance of doubt, any witness to the incident giving rise to the decision or to subsequent judicial proceedings, any other Competitor whose position in the classification is affected by the decision, or any other Competitor whose Championship points/position are affected by the decision are not deemed to be directly involved and do not have a right to Appeal against a decision.

1.1. At **Clubman Permit** short-circuit **Kart Racing Events** and in other disciplines it is permissible as provided below to **Appeal** to the **Stewards of the Event** against a **Decision** of the **Clerk of the Course.** Unless specifically authorised by the **ASN** the **Clerk of the Course** has no **Judicial** function at short circuit **Kart Race Events** at **Interclub Permit** status and above. At those **Events** the **Stewards of the Event** are the **Judicial** authority but no **Appeal** against their **Decisions** or the penalty applied is permissible – see Ch.18.

1.2. **Appeals** against a **Judge of Fact Technical Decision** when this results in a **Judicial Penalty** applied by the **Clerk of the Course** must be submitted to the **Event Secretary, Clerk of the Course** or their **Deputies** in accordance with App 8 to this Chapter and are directed to and brought before the **National Court**.

1.3. There is no Right of **Appeal** against either the **Decision** for imposing a **Drive Through** or **Stop and Go Penalty** or the **Penalty** itself even if it is converted to a time penalty in accordance with Ch.12 App.10.

1.4. All **Appeals** to the **Stewards of the Event** against a **Decision** of the **Clerk of the Course** must be brought by written notice delivered to the **Event Secretary, Clerk of the Course** or their **Deputies** together with an undertaking to pay the relevant **Fee** prescribed by the **NCR** at App.11 of this Chapter and Ch.1 App 2 It is not necessary to use an **Organiser's** or **ASN** pro-forma.

1.5. The **Notice of Appeal** must be received within 30 minutes of the first notification of the **Decision** to the **Competitor**.

1.6. The **Stewards of the Event** have authority in their entire discretion (but acting reasonably) to extend the time limit for delivery of a **Notice of Appeal** against a decision of the **Clerk** or other **Official** in such circumstances as they deem to be merited in the interests of justice. The granting or refusal of such extension of time must recorded as a **Decision** of the **Stewards** and is an **Official Document**. Refusal may be the subject of an **Appeal** to the **National Court** (see App 6).

1.7. Any oral announcement of the **Clerk's Decision** shall **NOT** be the relevant time for the start of the 30 minute period. The period of 30 minutes shall commence at the time at which the written **Notice of Decision** is delivered to the **Competitor**.

1.8. If the **Clerk's Decision** is delivered by e mail or other electronic digital means as notified to **Competitors** in the **Official Documents** (such as the **Official Noticeboard**) then it shall be the earlier of the time at which the **Decision** email is sent or the time at which the **Decision** is posted on the **Official Noticeboard**.

It is the **Competitor**'s responsibility to monitor their email and or to be aware of the **Official Noticeboard**.

1.9. All **Notices of Appeal** must make provision for the payment of the relevant **Appeal Fee** prescribed by **Ch.1 App.2.** All fees are payable to the ASN and the Competitor shall provide to the **Organisers** a written undertaking to pay the **Fee** to the **ASN** within 7 calendar days of the **Notice of Appeal**.

1.10. The **Notice of Appeal** must detail all of:

a. The date

b. The **Event**

c. If applicable the number of the **Race**

d. The **Competitor Entrant** details including **Licence Number** and **Vehicle** number

e. The **Competitor Entrant** e mail address and at-**Event** mobile telephone number

f. The **Decision Appealed** against including if applicable the **Decision Number**

g. The brief reasons for bringing the **Appeal**

h. The identity of all witnesses

i. The name and **Vehicle** number of any other **Competitor** directly involved in the **Decision Appealed**

j. Any relevant **NCR** or **Official Documents**

1.11. The **Stewards of the Event** shall fix a time and place (which may be digital) for the **Hearing** of the **Appeal** and shall cause **Notice** of the time and place of the **Hearing** given to the **Competitor(s)** and if in writing then that **Notice** shall be an **Official Document.**

1.12. The **Appeal Hearing** shall be conducted in accordance with the current **Judicial Procedures Guidelines** document as published on the **ASN** website.

1.13. In considering an **Appeal** against a **Decision** of the **Clerk of the Course** the **Stewards** may, if the offence is considered sufficiently serious, impose further penalties, increase or decrease or substitute any penalty previously applied even where the **Appeal** is rejected. Where a penalty is varied the reasons must be given in writing as part of their **Decision.**

1.14. The **Decision** of the **Stewards** shall be reasoned and contain a summary of the evidence.

1.15. The **Stewards** may announce their **Decision** orally but shall provide a written reasoned **Decision** as soon as practicable following the **Hearing**.

1.16. Where permissible a **Competitor** has 30 minutes from delivery of the **Stewards**' **Decision** (**Arts.1.7 and 1.8** above apply) to lodge any **Notice of Intention to Appeal** to the **National Court**. The **National Court** may in its entire discretion extend the time limit for delivery of such a **Notice of Intention to Appeal.**

1.17. In respect of any **Notice of Intention to Appeal** to the **National Court** **Arts.1.9 and 1.10.a–f.** apply.

1.18. The procedure thereafter for an **Appeal** brought to the **National Court** is provided at **Apps 6** and **7** and **8**.

1.19. In respect of a **Technical Non-Conformity Decision** which is not a **Judgement of Fact** a **Competitor** may **Appeal** to the **Stewards of the Event**. In such cases **Arts.1.4–1.18** above apply.

1.20. An **Appeal** referred by the **Stewards** to the **National Court** under **Art.1.19** above shall then proceed in accordance with **Apps. 6** and **7** and **8.**

1.21. Where an **Appeal** to the **Stewards of the Event** is withdrawn prior to the **Hearing** of that **Appeal** then the **Appeal Fee** may be cancelled at the discretion of the **Stewards.**

1.22. Unless otherwise decided by the **Stewards** for special reasons the **Appeal Fee** shall normally be forfeit if an **Appeal** fails for any reason.

1.23.

Nature of Appeal	Time Limit
(a) Appeals against the Refusal of Entry	Within 48 hours of the **Competitor** receiving notice of refusal in any case no later than 24 hours before the Competition starts unless in accordance with **Ch.2 App.7 Art.7.2.**.
(b) Appeals against handicap, make up of a heat, or qualification for a heat or final	Not less than one hour before the time laid down for the start of the competition, heat, or final
(c) Appeals against a decision of a **Scrutineer** or **Technical Commissioner**, by the **Competitor** directly concerned	Within 30 minutes of that decision being notified to that **Competitor**
(d) Appeals against any mistake or irregularity occurring whilst the competition is taking place	Within 30 minutes of the Appellant finishing the competition
(e) Appeals concerning the results of a competition	Within 30 minutes of the publication of provisional results or any amendments thereto, or, if results are published in accordance with **Ch.3 App.6 Art 1.1.c and 1.1.d**
(f) Appeals against a decision of the **Clerk of the Course** not falling within (a) to (e) inclusive	Within 30 minutes from the time of the decision notified in writing to the Competitor (**Ch.2 App.3 Art.1.16** applies)
(g) Appeals against a decision of the Stewards of the **Event**	Within 30 minutes from the time of the first communicant of the decision to the Competitor **(Ch.2 App.7 Art.5)**

2. Appeal Against the Results of a Competition

2.1. **Right of Appeal**
An **Appeal** against the **Results** of a **Competition** may be submitted by any **Competitor** or **Entrant** named in the published **Results** who is directly affected by those **Results**.

2.2. **Grounds for Appeal**
An **Appeal** may only be lodged in circumstances where there is:

a. An error or omission in the published **Results**; or

b. An incorrect declaration of the **Results**.

For the avoidance of doubt, this procedure may not be used to **Appeal** any **Decision** of the **Clerk of the Course** or **Stewards of the Event** which must be addressed through the appropriate process in accordance with the National Competition Rules.

2.3. **Time Limit for Lodging an Appeal**
An **Appeal** under this Article must be lodged:

a. Within 30 minutes of the time of publication of the Provisional Results or any amendments thereto; or

b. Where results are published under the terms of **Ch.3 App.6 Art.1.1.c** or **1.1.d**, within 72 hours of receipt of the **Results** by the **Competitor** or **Entrant**.

2.4. **Procedure for Lodging an Appeal**

a. **Appeals** must be submitted in writing to the **Clerk of the Course**, the **Event Secretary**, or their Deputies, clearly identifying the basis of the Appeal and the specific aspect(s) of the **Results** being contested.

b. A fee undertaking, as prescribed by Ch.1 App2, must accompany the Appeal

2.5. **Determination of the Appeal**
The **Stewards of the Event** shall consider the **Appeal** and determine whether the **Results** require correction. Their **Decision** shall be final, subject only to any further right of **Appeal** to the **National Court**

which shall be dealt with in accordance with **Ch.2 App.7 Art.5.**

2.6. **Publication of Amended Results**
Where the **Appeal** is upheld and the **Results** are amended, the revised **Results** shall be issued in accordance with **Ch.3 App.6.** The date and time of issue of the amended **Results** must be published in accordance with **Ch.3 App.6 Art.1.1.**

2.7. **Appeal Process**
Unless otherwise stated in this Appendix, the conduct of any **Appeal** shall follow the procedural requirements set out elsewhere in this Appendix, including but not limited to those governing notification, representation, evidence, and decision-making by the **Stewards of the Event.**

CHAPTER 2 JUDICIAL

Appendix 5 - Judicial Proceedings before Championship Stewards

1. Constitution and General Provisions

1.1. The function of **Championship Stewards** is to uphold the approved **Championship Regulations** where matters are referred to them by the **Championship Co-ordinator** or (see **Arts.1.21–5.1 below**) on **Appeal** brought to them by a **Competitor** in respect of a **Championship Appeal** relating to the approved **Championship** Regulations.

1.2. Decisions of the **Championship Stewards** may be **Appealed** to the **National Court** when the **National Court Practice Direction** at **App.7** shall apply.

1.3. **Championship Regulations** must provide for a minimum of three (3) named **Championship Stewards** who should be experienced in the relevant sporting discipline. These **Stewards** may be replaced or substituted during the **Championship** but any such action must be reported by written notice to the **ASN** by the **Championship Permit** holder and such notice shall be an **Official Document.**

1.4. The **Championship Stewards** panel at any **Hearing** must comprise of at least three (3) of the persons named.

1.5. **Championship Stewards** can only adjudicate on disputes or irregularities or **Appeals** arising from the approved **Championship Regulations** as well as matters referred under **Art.1.6** below. All matters for consideration by the **Championship Stewards** must be brought at the earliest possible opportunity.

1.6. At the request of the **Championship Co-ordinator** the **Championship Stewards** may hold a Hearing to consider the imposition of any penalty on any **Competitor** registered for the **Championship**.

1.7. All **Hearings** of the **Championship Stewards** should be conducted in accordance with the current **Judicial** Procedures Guidelines document as published on the **ASN** website.

1.8. The **Championship Stewards** shall fix a time and place for the **Hearing** and which shall be notified in writing to the **Competitor.** With the agreement of the parties such a **Hearing** may be digital subject to the availability of adequate secure facilities.

1.8.1 If the **Competitor** fails to attend the **Hearing** following proper **Notice** then the **Hearing** may proceed in absence provided that the **Judicial** body is satisfied by evidence that the **Competitor** has been notified of the time and place of the **Hearing**.

1.9. An **Appeal Hearing** shall be conducted as a de novo (new) **Hearing** of the matter.

1.10. No advocates are allowed to appear for any party before the **Championship Stewards** in any **Hearing.**

1.11. All decisions of the **Championship Stewards** must be reasoned and delivered to the parties in writing. An oral decision may be announced at the conclusion of the proceedings but must also be delivered in writing.

1.12. All decisions of the **Championship Stewards** are **Official Documents** and shall be published accordingly.

1.13. The range of penalties available to the **Championship Stewards** is provided in **App.2 Art.4.1** to this Chapter as may be supplemented by any specific **Championship** penalties in the published **Championship Regulations,** the **Penalty** of **Disqualification** however may not be varied (**App.2 Art.4.1** applies).

1.14. **Decisions** of the **Championship Stewards** are subject to the inherent jurisdiction of the **National Court** and which may reviewed on **Appeal** or under the **ASN** right to refer any matter to the **Court** for investigation or inquiry.

1.15. Decisions of the **Championship Stewards** may be **Appealed** to the **National Court** only by the parties directly involved in the matter giving rise to the **Decision** and to the exclusion of all and any third parties.

1.16. Any **Appeal** to the **National Court** must be brought by the **Competitor** no later than seven (7) calendar days next following the date on which the written **Decision** was delivered to the **Competitor.**

1.17. Where a **Decision** is delivered to the **Competitor** electronically then the date of delivery shall be deemed the date on which the **Decision** is sent. If it is sent by Signed for First Class post then the date of delivery shall be deemed to be the second (2nd) business day next following the date of posting.

1.18. Written **Decisions** may only be delivered electronically or by Signed for First Class post.

1.19. Such an **Appeal** must be brought by **Notice of Intention to Appeal** in accordance with the **National Court Practice Direction** (see **App.7**). This **Notice** must be delivered to the **Championship Co-ordinator** and at the same time to the **ASN National Court Administration** and should be delivered electronically (**nationalcourtadmin@motorsportuk.org**).

1.20. The prescribed **Appeal Fee** (see **Ch.1 App.2**) must be paid to the **ASN** within the same period of seven (7) calendar days.

1.21. **Championship Stewards** have no discretion to allow an **Appeal** to the **National Court** out of time; such discretion is vested only in the **National Court** pursuant to the **National Court Practice Direction.**

1.22. On receipt of a **Notice of Intention to Appeal** to the **National Court** the **Championship Stewards** must comply with the **National Court Practice Direction** but they may delegate under their supervision this responsibility to the **Championship Co-ordinator.**

2. Championship Points Appeals

2.1. An **Appeal** against **Championship** points awarded or not awarded by the **Championship Organisers** must be brought to the **Championship Stewards** by the **Competitor** no later than seven (7) calendar days after the points in dispute have first been published by the **Championship Organisers.** The following applies.

2.2. The **Competitor** must deliver to the **Championship Co-ordinator** a **Notice of Appeal** in writing and which sets out the full case and challenge to the published points. This should wherever possible be delivered electronically with proof of delivery. If it is sent by Signed for First Class post then the date of delivery shall be deemed to be the second (2nd) business day next following the date of posting.

3. Other Championship Appeals

3.1. An **Appeal** against any **Championship** decision by the **Championship Organisers** must be brought to the **Championship Stewards** by the **Competitor** no later than seven (7) calendar days after the decision has first been published by the **Championship Organisers.**

3.2. The **Competitor** must deliver to the **Championship Co-ordinator** a **Notice of Appeal** in writing and which sets out the full case and challenge to the published decision. This should wherever possible be delivered electronically with proof of delivery. If it is sent by Signed for First Class post then the date of delivery shall be deemed to be the second (2nd) business day next following the date of posting.

4. Provisions applying to all Championship Appeals

4.1. The following provisions apply to all **Championship Appeals:**

a. **Notices of Appeal** may only be delivered electronically or by Signed for First Class post.

b. The **Competitor** must pay to the **ASN** the prescribed **Appeal Fee** (see **App 10** to this Chapter) no later than the first business day next following the delivery of the Notice of **Appeal**.

c. Upon receipt of the **Notice of Appeal** the **Championship Co-ordinator** shall first check with the **ASN** that the **Appeal Fee** has been paid. If it has not been paid then the **Appeal** shall not proceed subject only to manifest error as to receipt of the **Appeal Fee**.

d. Provided that the **Appeal Fee** has been paid then the **Championship Co-ordinator** shall refer the

Appeal to the **Championship Stewards**.

e. The **Championship Stewards** shall then fix a time and place for the Hearing of the **Appeal** and which shall be notified in writing to the **Competitor** by the **Championship Co-ordinator.** With the agreement of the parties such a **Hearing** may be digital subject to the availability of adequate secure facilities.

f. The **Championship Stewards** may give **Directions** including a timetable for the submission of any written position statement or evidence and any replies in the period prior to any **Hearing.**

g. With the written agreement of the parties the **Championship Stewards** may deal with the **Appeal** on the basis of written submissions only nonetheless the **Hearing** date shall remain fixed subject to any adjournment of it.

4.2. The **Decision** of the **Championship Stewards** may be **Appealed** to the **National Court** and then **Arts.1.14–1.16** and **1.19–3.2** above apply to such an **Appeal**.

4.3. Where an **Appeal** to the **Championship Stewards** is withdrawn prior to the **Hearing** of that **Appeal** then the **Appeal Fee** may be cancelled at the discretion of the **Stewards.**

4.4. Unless otherwise decided by the **Stewards** for special reasons the **Appeal Fee** shall normally be forfeit if an **Appeal** fails for any reason.

5. Right of Review

5.1. A **Right of Review** exists in respects of **Decisions** of the **Championship Stewards**.

CHAPTER 2 JUDICIAL

Appendix 6 - Judicial Proceedings before the National Court

1.1. The **National Court** is the **ASN National Court** for the purposes of the **Code** and these **NCR.** It is independent of the **ASN** although its administration is funded by the **ASN** and may be performed by the **ASN Legal department**. It can be contacted at **nationalcourtadmin@motorsportuk.org**. The work of the **Court** is overseen by an independent external lawyer and the **Chairs** of the **Court** are independent external lawyers and others of suitable relevant experience together with a specialist panel for the purposes of **Art.1.6e** below.

1.2. All **Judicial Proceedings** before the **Court** shall be conducted in accordance with the **National Court Practice Direction** at **App.7** of this Chapter. The **Court** acting by its **Chairs** has the authority and jurisdiction to issue **Directions** in and for the conduct of any case or matter before it. Such **Directions** will be **Decisions** of the **Court**.

1.3. The **Decisions** of the **Court** may be published by the **ASN** subject to any **Direction** given by the **Court**.

1.4. The proceedings of the **Court** may be considered open or closed at the **Direction** of the **Court**. Normally the proceedings would be considered open in the interests of transparent justice however certain matters may be considered sensitive whether to persons or the sport and therefore the **Court** in its entire discretion may declare its proceedings closed of its own motion or on the application of the **ASN**.

1.5. The **Court** panels respect the principles of avoiding perceived bias and accordingly no **Chair** or member of the **Court** panel may sit in judgement on any matter in which they have been previously involved or otherwise have any interest or connection to a party or witness appearing. The fact that a panel member may be **Licensed** or otherwise accredited by the **ASN** does not infringe the principle of perceived bias.

1.6. The jurisdiction of the **Court** includes the matters listed below where procedural details are set out in **App. 7:**

a. disciplinary matters referred to it by the **ASN Disciplinary Officer** including but not exclusively those matters specified in **App.1 to this Chapter.**

b. **Appeals** against **Decisions** of the **Stewards of an Event.**

c. **Appeals** against **Decisions** of the **Championship Stewards.**

d. **Appeals** against **Acceptance** of **Entry**

e. **Appeals** against suspensions of **Competition Licence** or other **ASN** accreditation pursuant to a DVLA licence disqualification.

f. **Appeals** in **Safeguarding** matters (by specialist panel).

g. **Technical Appeals** (**App.8 to this Chapter**).

h. **Inquiries Ordered** by the **ASN** Disciplinary Officer.

i. **Inquiries Ordered** by the **Court** of its own motion on application by a **Competitor** where the **ASN** has declined to **Order an Inquiry.**

j. Arbitration proceedings pursuant to **Art.1.9** below and in accordance with the **Judicial Practice Direction.**

1.7. The **Court** has full powers of penalty as provided by **App.2 to this Chapter**.

1.8. The **Court** has complete discretion to make such **Order** as to **Costs** of the proceedings before it save that no **Order** as to **Costs** shall be made in favour of any party appearing as **Appellant** or as respondent to any **Disciplinary** proceedings or as a party to an **Inquiry** (save in that case for the **Costs** of the **ASN** in bringing or being a party to an **Inquiry**).

1.9. The **Court** has the discretion to accept under its jurisdiction to provide binding arbitration (**Art.1.6.i** above) between **Competitors** and **Clubs** and other **Recognised** bodies and one another on any matter directly related to motorsport under the **NCR.**

1.10. Pursuant to **App.9** to this Chapter and **App.7** the **Court** is vested with authority to exercise a **Right of Review** including any matter referred to it by the **Disciplinary Officer**.

1.11. The **National Court** has the authority in its entire discretion to remit the unexpired term of any **Suspension** or **Exclusion.** Any application for the **Court** to exercise this jurisdiction shall be submitted to **nationalcourtadmin@motorsportuk.org** and in accordance with **App.7 to this Chapter.**

1.12. Where an Appeal to the **National Court** is withdrawn prior to the Hearing of that Appeal or if the Appeal fails for any reason then the Appeal Fee may be retained or returned at the judicial discretion of the **National Court.**

CHAPTER 2 JUDICIAL

Appendix 7 - National Court Practice Direction

1. The **ASN National Court** (‘**Court**’) is funded by but independent of the **ASN**. The **Court:**

   1.1. is the final **National Court** of **Appeal** for all **ASN Licence Holders** in respect of **National Competitions**.

   1.2. may Review its own **Decisions**.

   1.3. may waive or impose any penalty under these **NCR**.

   1.4. may annul the results of any **Competition**.

   1.5. may not order any **Competition** to be re-run.

2. The **Court** reserves the right to amend this **Practice Direction** (‘**PD**’) at any time. Parties before the **Court** and subject to its jurisdiction must check the **ASN** website to ensure that reference is made to the current **PD**.

3. This **PD** is of regulatory effect and governs all proceedings before the **Court**. It is comprised of the following elements:

   Part A **-** General Provisions.

   Part B - All **Appeals** from the **Stewards of the Event** and **Championship Stewards**.

   Part C - All **Technical Eligibility Appeals to the National Court**.

   Part D - **Appeal**s against the **Refusal of Entry**

   Part E - Disciplinary Proceedings.

   Part F - Inquiries and Investigations

   1. Inquiries Ordered by the **ASN**

   2. Inquiries Ordered by the **Court**

   Part G - Arbitration

   Part H - Ancillary Matters

Part A:

4. General Provisions

Note: For the calculation of time under this **PD**, the first day of a period of days is the day following the relevant **Decision** and time does not run on a Saturday, Sunday or any UK bank or other statutory holiday. A deadline falling on a Saturday, Sunday or any UK bank or other statutory holiday shall be deemed to resume on the next following working day.

4.1. All communications with the **Court** must be in English and sent only by email to **nationalcourtadmin@motorsportuk.org**

4.2. Where an original document transmitted to the **Court** is not in English then it must be accompanied by a Certified Translation.

4.3. Each case brought before the **Court** shall be assigned a case reference and this shall be referred to in all communications to the **Court** (and where relevant to the **ASN**) in connection with the matter.

4.4. The **Court Administration** shall assign a **Chair** to matters brought before the **Court**. That **Chair** may if deemed necessary provide **Case Management Directions** for the conduct of the matter including timetable. Any **Chair** may give such **Directions** regardless of whether that **Chair** sits at the **Hearing** of the matter.

4.5. The **Chair** appointed may in the entire discretion of the **Court** grant extensions of time on the written application of the party seeking the extension. This jurisdiction includes extension of the time allowed

for lodging **Notice of Intention to Appeal** however the **Court** will normally only grant such extension in exceptional circumstances.

4.6. **Application**s for extension of time must be made in writing to the **Court** and must be reasoned and sent only by email to **nationalcourtadmin@motorsportuk.org**.

4.7. The **Court** will appoint the panel of judges to each case and all **Hearings**. To avoid perceived bias no person may have any role in the **Judicial Panel** if they have in any way been involved in the matter previously (except in matters of Review of a **Court Decision**) or are connected directly or indirectly to a party or witness appearing before the **Court**. Any such conflict of interest must be declared to the **Court Administration** at the first opportunity and the relevant person shall recuse themselves.

4.8. Pursuant to **Art.4.7** above all members of the relevant **Court** panel will sign a statement of independence prior to the **Hearing** and which shall be copied to the parties appearing before the **Court**.

4.9. The **Court** will notify all parties of the **Hearing** date for any matter before it, even in the case of **Technical Eligibility Appeals** which normally proceed only as a documentary process.

4.10. The **Court** in its entire discretion may refer a Technical Eligibility **Appeal** to an oral **Hearing** but the **Appellant** has no right to make application for an oral **Hearing**.

4.11. The **Court** in its discretion may deliver its **Decision** orally at the conclusion of the **Hearing** with a written **Decision** to be delivered and published as soon as practicable, or the **Court** may defer the announcement of its **Decision** to a future date whether specified or not.

4.12. All written **Decisions** of the **Court** shall be reasoned.

4.13. The **ASN** shall be represented before the **Court** by its **ASN Legal Team** or other appointed advocate.

4.14. Other parties appearing before the **Court** as **Appellant** or **Defendant** to the relevant proceedings as well as any affected party where applicable may be represented before the **Court**. As a private law tribunal that representative may be a qualified barrister or solicitor (whether practising or not) or other representative. The nomination and details of any representative should be notified in writing for the purposes of **Art.5.10 below** and otherwise 7 days before the **Hearing** by email to **nationalcourtadmin@motorsportuk.org**.

4.15. **Documentary submissions of case to the Court:**

a. Should be typewritten.

b. Must not contain script on the reverse face of a page.

c. Contain an index where part of or comprising a bundle.

d. Should not be submitted in editable Word format.

e. Should be submitted in condensed **PDF** format.

f. All attachments to email should be in condensed **PDF** format.

g. All necessary references to this **PD** within documentation submitted to the **Court** by the parties shall reference as '**PD** Art.'X'.

Part B:

5. All Appeals from the Stewards of the Event and Championship Stewards.

5.1. No right of **Appeal** exists for third parties to the relevant **Stewards**' **Decision**. Therefore an **Appeal** may only be brought by a person or body who was a party to the proceedings before the relevant **Stewards**.

5.2. In circumstances where the **Court** has admitted an **Appeal** to **Hearing**, the **Court** may determine in its entire discretion that other parties may be affected by their ultimate **Decision** and accordingly the **Court** may grant such persons the right to make submissions and to appear to present oral submissions. If such determination is made by the **Court** that **Decision** shall issue by **Case Directions** and the **Decision** is not susceptible to **Appeal**.

5.3. The only **Grounds of Appeal** to the **National Court** from a **Decision** of the **Stewards of the Event** or the **Championship Stewards** are:

a. A gross miscarriage of justice has occurred

b. The penalty is wholly inappropriate for the breach of regulations.

5.4. Written **Notice of Intention to Appeal** to the **National Court** accompanied by an undertaking to pay the correct fee (Ch.1 App.2) must be given to the **Event Secretary** or **Clerk of the Course** or, their deputies or in the case of a **Decision** of **Championship Stewards** then to the **Championship Co-ordinator** within 30 minutes of the time of the first communication of the **Decision**.

5.5. The **National Court** has the authority as a judicial function to extend the Art.5.4 deadline where it is accepted by them to have been wholly impractical to lodge the **Notice of Intention to Appeal** within 30 minutes.

5.6. Where the **Decision** being appealed is only delivered in writing then:

a. If delivered at the **Event** the time limit for submission is 30 minutes after the **Decision** is transmitted to the **Competitor**.

b. If delivered after the conclusion of the **Event** then the **Notice of Intention to Appeal** must be delivered within 7 days of the time and date at which the **Decision** was delivered.

5.7. All **Notices of Intention to Appeal** must also be lodged as a copy by email to nationalcourtadmin@motorsportuk.org. There is no prescribed form for the Notice of Intention, any written format is acceptable, however thereafter documents submitted must conform with Art.4.15 above.

5.8. **Appeal Fees:**

a. All **Notices of Intention to Appeal** are deemed under the **NCR** to incorporate an **Undertaking** to pay the relevant scale **Appeal Fee** and which must be paid direct to the **ASN** by credit or debit card or by bank transfer from a traceable bank account and must be received no later than 24 hours following the lodging of the **Notice of Intention to Appeal**.

b. Where an **Appeal** is ruled not satisfy the **Grounds** at Art.5.3 above then the **Appeal Fee** is forfeit.

c. At the conclusion of any **Appeal** before the **Court**, the **Court** may make such **Order** as it deems fit in respect of the **Appeal Fee**.

5.9. In its entire discretion the **Court** acting judicially by a permanent **Chair** may extend the time limit for lodging any **Notice of Intention to Appeal**. Any application requesting the **Court** to exercise this discretion must lodge such application in writing accompanied by a copy of the **Decision** by email to nationalcourtadmin@motorsportuk.org

5.10. Within 10 days of the **Notice of Intention to Appeal** the **Appellant** or **Appellant**'s representative must submit by e mail to nationalcourtadmin@motorsportuk.org a **Confirmation of Appeal** respecting Art.4.15 above.

5.11. The **Confirmation of Appeal** must specify:

a. the **Grounds of Appeal** relied on and

b. the arguments in support and

c. all relevant regulatory references and

d. attach the relevant material documents (if any).

5.12. Upon receipt of **Confirmation of Appeal** the **National Court Administrator** will appoint a **Chair** to oversee conduct of the Case. This **Chair** may not be the **Chair** of any subsequent **Hearing**.

5.13. Within 10 calendar days of the case referral at Art.5.12 above the designated **Chair** shall rule whether or not the **Appeal** satisfies the **Grounds of Appeal** criteria at Art.5.3 above and this **Decision** is not subject to any **Appeal** nor to any **Right of Review**.

5.14. Where an **Appeal** is ruled not to satisfy the **Grounds** at Art.5.3 then the **Appeal Fee** shall be forfeit.

5.15. In the case of any **Appeal** admitted to **Hearing** the designated **Chair** may give **Directions** for the future conduct of the case at any time before or during any **Hearing**. This may include **Hearings** and or Rulings on preliminary issues.

5.16. **T**he **National Court Administration** shall fix the date for all **Hearings** subject to any Direction of the **Court** and it shall notify the parties accordingly. The time nominally assigned to the commencement of a **Hearing** is no more than nominal.

5.17. Any **Case** may by **Directions** of the **National Court** proceed on an accelerated timetable in the interests of the sport. An **Appellant** may make **Application** to the **Court** for an accelerated timetable under this Art.5.17 in writing by email to nationalcourtadmin@motorsportuk.org. The designated **Chair** (Art.5.12) shall rule on such **Application** and if acceded to then shall give **Directions**.

5.18. Where an **Appeal** is admitted to **Hearing** then subject to any other Direction made by the **Chair** under Art.5.15 above the **Appellant** shall within 10 calendar days of the **Decision** made at Art.5.13 above the **Appellant** or their representative shall submit to the **National Court Administration** by email only to nationalcourtadmin@motorsportuk.org their skeleton argument respecting Art.4.15 and Art.5.11.

5.19. Where an **Appeal** is admitted to **Hearing** and the subject matter of the **Appeal** is an incident involving another party then notwithstanding the provisions of Art. 20 above the **National Court** shall notify that other party or parties and who shall have the opportunity to make written representations to be submitted to the **National Court Administration** by e mail only to nationalcourtadmin@motorsportuk.org such submissions respecting Art.4.15 and Art.5.11 above within 10 calendar days and to appear at the **Hearing** and make oral submissions.

Part C:

6. All Technical Eligibility Appeals to the National Court

6.1. No right of **Appeal** exists for third parties to the relevant **Decision**. Therefore an **Appeal** may only be brought by a person or body who was a party to the **Decision**.

6.2. In circumstances where the **Court** has admitted an **Appeal** to **Hearing**, the **Court** may determine in its entire discretion that other parties may be affected by their ultimate **Decision** and accordingly the **Court** may grant such persons the right to make submissions and to appear to present oral submissions. If such determination is made by the **Court** that **Decision** shall issue by **Case Directions** and the **Decision** is not subject to **Appeal**.

6.3. The right of **Appeal** to the **Court** is in respect of:

a. An eligibility **Decision** of the relevant **Judicial Body.** For the avoidance of doubt this includes the right to challenge any **Judge of Fact Decision** upon which the eligibility **Decision** was based.

6.4. Written **Notice of Intention to Appeal** to the **National Court** must be given to the **Event Secretary** or, **Clerk of the Course** or their deputies or, in the case of a **Decision** of **Championship Stewards** then to the **Championship Co-ordinator** within 30 minutes announcement of the **Decision**.

6.5. **National Court** has the authority as a judicial function to extend the Art.6.3.c deadline where it is accepted by them to have been wholly impractical to lodge the **Notice of Intention to Appeal** within 30 minutes.

6.6. Where the **Decision** being appealed is only delivered in writing then:

a. If delivered at the **Event** the time limit for submission is 30 minutes after the **Decision** is transmitted to the Competitor.

b. If delivered after the conclusion of the **Event** then the **Notice of Intention to Appeal** must be delivered within 7 days of the time and date at which the **Decision** was delivered.

c. All **Notices of Intention to Appeal** must be lodged as a copy by email to nationalcourtadmin@motorsportuk.org. There is no prescribed form for the Notice of Intention, any written format is acceptable, however thereafter documents submitted should conform with Art. 4.15 above.

6.7. Upon receipt of the **Notice of Intention to Appeal** the relevant receiving **Event** Official must notify the **Chief Scrutineer** and **Technical Officials** involved of the fact of the **Appeal**. This notification must be made in writing.

6.8. **Appeal Fee**s:

a. All **Notices of Intention to Appeal** are deemed under the **NCR** to incorporate an **Undertaking** to pay the relevant scale **Appeal Fee** and which must be paid direct to the **ASN** by credit or debit card or by bank transfer from a traceable bank account and must be received no later than 24hours next following the lodging of the **Notice of Intention to Appeal**.

b. At the conclusion of any **Appeal** before the **Court**, the **Court** may make such **Order** as it deems fit in respect of the **Appeal Fee**.

6.9. In its entire discretion the **Court** acting judicially by a permanent **Chair** may extend the time limit for lodging any **Notice of Intention to Appeal**. Any Competitor requesting the **Court** to exercise this discretion must lodge such **Application** in writing accompanied by a copy of the **Eligibility Decision** by e mail to nationalcourtadmin@motorsportuk.org. The **Application** must set out in full the reasons for required extension of time including the reason why the primary time limit could not be complied with.

6.10. Within 10 calendar days of the **Notice of Intention to Appeal** both the **Appellant Competitor** and the **Technical Officials** must lodge their First Submission with the **National Court Administration** by email to nationalcourtadmin@motorsportuk.org. This document must respect Art.4.15 above and set out in full:

a. the relevant technical (and if relevant, sporting) regulations

b. The detailed reasons for the non-compliance reported to the **Event** Judicial body

c. The detailed reasons for appealing the **Eligibility Decision**.

6.11. The **National Court Administration** will by email exchange the **First Submissions** between the relevant parties.

6.12. The relevant parties then have a period of 10 calendar days to provide any response by way of **Second Submission** and which must be sent to the **Court** entirely in accordance with the relevant provisions of Art.6.10 above.

6.13. The **National Court Administration** will by email exchange the **Second Submission**s between the relevant parties.

6.14. The relevant parties then have a final period of 7 calendar days in which to respond exclusively in respect of entirely new matters raised in the **Second Submission**s. Any such submissions must be sent to the **Court** in accordance with the relevant provisions of Art.6.10 above.

6.15. The **Court** will convene as soon as reasonably practicable and may do so virtually.

6.16. The **ASN** has the permission of the **Court** to submit a position statement in any Eligibility **Appeal** before the **Court** which position statement may address the **ASN** position on interpretation of any regulations under consideration but the statement shall not present any position regarding the facts of the matter.

6.17. A position statement delivered under Art.6.15 above shall be sent to the **National Court Administration** who shall provide copy thereof to the parties.

Part D:

7. Appeals against the Refusal of Entry

7.1. General Appeal Procedure

7.1.1. **Appeals** against the refusal of an Entry (**Ch.6 App.1 Art.10.3.c**) must be made in writing to the **ASN** within 48 hours of the **Competitor** receiving notification of the refusal and in any case no later than 24 hours before the **Competition** starts.

7.1.2. If it is not possible to convene the **National Court** within this timeframe the Appeal shall be considered by the **Senior Chair** of the **National Court** or, in the event the **Senior Chair** is not available, an ASN appointed alternate.

7.1.3. The Appeal must:

a. clearly state the grounds for Appeal (**Art.7.4 below**) and include any supporting documentation; and

b. be accompanied by the relevant fee, or fee undertaking where relevant, in accordance with **Ch.1 App.2.**

7.2. Events Commencing within 24 hours

For Events commencing within 24 hours, and where the Event falls within the 'Applicable Event Categories' below, Appeals must be submitted in writing to the **Stewards of the Event**:

a. The **Appeal** must be lodged **within 30 minutes** of the **Competitor** receiving notification of the refusal, and

b. In all cases, no later than **one hour before the start of the Competition.**

In these circumstances, the Decision of the **Stewards of the Event** shall be final. For the avoidance of doubt, there is no Right of Appeal against the Decision of the Stewards in such cases.

7.2.1. **Applicable Event Categories:**

a. **Events** listed in **Ch.3 App.8 Art.3.1**

b. Clubman Rallies

c. Kart Events

d. Cross Country Events

e. Trial Events

f. **Autotest** / AutoSOLO Events

7.3. Right of Appeal

An Appeal against the refusal of an entry to a Competition may be submitted by the Entrant whose entry has been refused.

7.4. Grounds for Appeal

An Appeal may be made where the Entrant believes the refusal of entry was:

a. contrary to the **NCR** and/or **Official Documents**,

b. Not made in accordance with fair and transparent procedures.

Part E:

8. Disciplinary Proceedings

8.1. **Part A** of this **PD** applies to **Disciplinary** proceedings except for **Art.4.10**.

8.2. All **Disciplinary** proceedings will be brought by the **Disciplinary Officer** or **ASN** authorised representative and who may instigate proceedings for any breach of the **NCR** notwithstanding any previous Judicial action taken.

8.3. The **ASN** will be represented by its **Disciplinary Officer** or such person appointed on their behalf.

8.4. Any person subject of **Disciplinary** proceedings ('a **Defendant**') may be subject to an interim suspension of any **ASN Licence** pending the conclusion of the proceedings.

8.5. All **Disciplinary** proceedings shall be commenced by summons issued by email by the **ASN** ('the **Summons'**)

8.6. The **Summons** shall set out:

a. the relevant **Regulations** alleged to be breached and

b. a brief statement of the facts relied on and

c. the date of the **Hearing** and

d. whether any interim suspension of **Licence** is invoked.

8.7. The **Defendant** may be represented in accordance with **Art.4.14** above.

8.8. To assist the organisation of the business of the **Court** the **Defendant** must indicate in writing their plea intention in respect of the charges of breach alleged in the **Summons** (admit or deny) 7 calendar days before the scheduled date of the **Hearing.** This must be communicated by e mail to **nationalcourtadmin@motorsportuk.org** and must be simultaneously copied to **legal@motorsportuk.org**.

8.9. The **Defendant** must in addition provide as at **Art.8.8** above no later than 7 days before the scheduled **Hearing** the following:

a. Confirmation of the identity of and contact details of any representative and

b. Copies of any witness evidence relied on (see **Art.8.10** below) and

c. Copies of any documentary evidence to be relied on and

d. Copies of any image (moving or still) to be relied on and\

e. A skeleton argument of the **Defendant**'s position.

8.10. In addition to the requirements of **Art.4.15**, all witness evidence must be signed by its maker and contain a statement of truth in the following form:

'I confirm that the content of this statement is true to the best of my knowledge and belief and understand that any untrue statement may be the subject of proceedings and penalty before the National Court'.

8.11. Upon a finding that the alleged breach is proved, the **Court** may impose such penalty as it sees fit pursuant to these **NCR**.

8.12. The **Court** cannot order any **Competition** to be re-run.

8.13. On the principle of **Limitation of Actions** no **Disciplinary** proceedings shall be brought in respect of any breach of these **NCR** where the alleged breach occurred more than 5 years before the date of the **Summons.**

8.14. **Remission of Penalty.** The **National Court** has the right to remit any unexpired term of a suspension or exclusion, as it may think fit. Requests for remission of sentence must be submitted in writing to the **National Court**, accompanied by a non-returnable fee as detailed in **Ch.1 App.2**. Whenever possible, the same **Court** which applied the original penalty will deal with the application and entirely in writing, with no right to an oral **Hearing**.

Part F:

9. Inquiries and Investigations

Part 1 – Inquiries Ordered by the ASN

9.1. The **ASN** may in its entire discretion order an Inquiry into any matter arising under or by virtue of these

NCR. Such Inquiry shall be ordered no later than 60 days from the issue coming to the attention of the **ASN**.

9.2. Where such an **Order** has been made it shall be referred as soon as practicable to the **National Court Administration** and shall be referred to a **Chair** designated by the independent **National Court Administrator.**

9.3. The designated **Chair** may give **Directions** leading to the **Hearing.**

9.4. The **Hearing** shall be referred to as an Inquiry.

9.5. It shall be the responsibility of the **ASN Legal Department** to arrange for the delivery of all material evidence to the **National Court Administration**, such evidence respecting the several provisions of this **PD**. This material shall be the **Inquiry Bundle**.

9.6. Any witnesses in person shall be requested to attend by or on behalf of the **ASN**.

9.7. The **National Court Administration** shall effect delivery of the **Inquiry Bundle** to all parties requested to appear.

9.8. At the **Inquiry** the **Evidence** shall be led by **ASN** but subject to any **Direction** of the **Court** in respect of its proceedings and procedure.

Part 2 – Inquiries Ordered by the Court

9.9. Exceptionally the **National Court** may consider an application by a party other than the **ASN** for the **National Court** to hold an Investigatory **Hearing** into an issue which the **ASN** has not itself referred to the **National Court**. If the **National Court** is fully satisfied that it would have been reasonable for such a referral to have been made then the **National Court** may, of its own volition, instigate an Investigatory **Hearing**.

9.10. Any such application may only be submitted by one or more of the parties directly involved in the issue and must be made promptly and in any **Event** within three months from the date when the issue was first brought to the attention of the **ASN** or if later within 14 days of written notification to the parties that the issue would not be referred by the **ASN** to the **National Court**.

9.11. **Application**s must be submitted in writing to the **National Court Administrator** by email to **nationalcourtadmin@motorsportuk.org** and be accompanied by the appropriate fee. In applications considered to be of sufficient urgency the **National Court** is entitled to proceed against an undertaking to lodge the fee.

9.12. The application must be in the form required under this **PD** at **Art.4.15** and set out in full the grounds for requesting the **National Court** itself to instigate an **Investigatory Hearing** and should be supported by any relevant documentary or other evidence.

9.13. If so directed by the **National Court** the parties to the **Application** shall furnish to the **National Court** for transmission to the other parties all documentation then and at any time in the possession of the parties relating to the specific **Event** out of which the issue is stated to have arisen and if necessary the **National Court** may amend any relevant time-limit or timetable until this requirement has been complied with.

9.14. Correctly lodged applications will be considered by the **National Court** acting by a panel of three of the nominated **Chairs.** Any application considered by the **National Court** shall be deemed correctly lodged.

9.15. The **ASN** will be asked by the **National Court** to set out the process that has been followed in dealing with the issue in question and the reasons for the non-referral to the **National Court** by the **ASN** . This will be disclosed to the **Applicant** except in exceptional circumstances as determined exclusively by the **National Court**.

9.16. The **National Court** will consider the application by way of written submissions but the **National Court** has the authority to call an oral **Hearing** should it consider it appropriate to do so and the parties (including the **ASN**) may be represented at such a **Hearing** in accordance with the relevant provisions of this **PD** . Written submissions shall be exchanged and disclosed. The **National Court** may facilitate additional submissions as it sees fit.

9.17. **Application**s will only proceed to an **Investigatory Hearing** of the **National Court** (and the **Application Fee** returned) where the **National Court** is fully satisfied that any reasonable tribunal properly advised would have considered it appropriate to refer the issue to the **National Court** and that the holding of an investigatory **Hearing** would clearly be in the best interests of the sport.

9.18. If an application is considered by the **National Court** to satisfy the above criteria then a **Hearing** into the issue will be arranged under a **National Court Chair** who shall be legally qualified. For the avoidance of doubt it should be noted that an application under this **Part 2** shall not in any way determine the substance of the issue itself which shall be reserved to any **Investigatory Hearing.**

9.19. Any **Decision** to hold an **Investigatory Hearing** under this **Part 2** should not be taken by any party as any indication as to the possible findings and outcome of that **Hearing.**

9.20. If an application is considered by the **National Court** to be frivolous or vexatious, the **National Court** may make an order for costs in favour of the **ASN** on an indemnity basis.

9.21. The **National Court** has discretion as to the procedure it adopts for the purposes of any **Investigatory Hearing** under this **Part 2.**

Part G:

10. Arbitration

10.1. The **National Court** is empowered at its sole discretion to provide binding **Arbitration** between **Competitors, Clubs** and other **ASN** Recognised bodies, and one another on any matter directly connected with Motor Sport. This arbitration can be requested by those concerned or initiated by the **ASN** but may only proceed with the consent of all parties. Liability for the costs of the arbitration may be ordered by the **Court** which is also empowered to make such **Order** in respect of the terms of the **Arbitration** as they think fit. Any party requesting arbitration must pay a non-refundable fee as detailed in **Ch.1 App.**

Part H:

11. Ancillary Matters

11.1. **Effect of Giving Notice of Appeal.**

11.2. The lodging of an **Appeal** against a **Decision** of the **Clerk of the Course**, or the giving of **Notice of Intention to Appeal** against a **Decision** of the **Stewards of the Event** does not suspend any penalty that may have been applied or endorsed, during the **Event** out of which the **Decision** has arisen.

11.3. After the conclusion of the **Event** out of which a **Decision** has arisen, if **Notice of Intention to Appeal** against a **Stewards**' **Decision** has been given, the operation of any sentence or **Decision** will be suspended until the disposal of the **Appeal** by the **National Court**. If a sentence of **Suspension** is upheld, the **Competitor** concerned will be **Disqualified** from the results of any **Competition** competed in while pending the **Hearing** of the **Appeal**. In coming to a judgement, the **National Court** can take into account any benefit the **Appellant** may have gained through appealing.

11.4. **Costs**
In giving a **Decision** the **National Court** can award costs to cover its own expenses, together with those incurred by the **ASN**. These may exclude the expenses incurred by the individual parties. Any costs incurred in bringing or responding to an action before the **National Court**, except those of the **ASN**, must be borne by the party incurring the cost. Exceptionally in the case of an **Investigatory Hearing** under **Part E** the **Court** may order the payment of costs against but not in favour of an individual.

12. Payment of Costs and Fines

12.1. **Fines** or **Costs** must be paid within 7 days of being imposed. Any delay in making payment shall result in suspension of **Licence** for the period during which the amount remains unpaid beyond the period of 7 days.

13. Liability to Pay Fine and/or Costs.

13.1. Where an **Entrant** is responsible for the payment of any fine and / or costs, then in the **Event** of nonpayment,

that **Entrant** can be suspended in the same way as the person on whom the fine or costs have been levied.

14. Allocation of Proceeds from Fines.

14.1. The proceeds from all fines are remitted to the **ASN** who will use them only for the provision of prizes, training, or for charitable purposes.

15. Hearings

15.1. All **Appeal Hearings** shall proceed as new **Hearings** and shall commence with presentation of the Evidence by the **ASN** representative.

15.2. All **Disciplinary Hearings** shall commence with presentation of the **Evidence** by the **ASN** representative.

15.3. The **National Court Administration** shall wherever practicable give more than 7 days' Notice of any **Hearing** before the **Court**.

15.4. Any **Application** to adjourn proceedings listed for **Hearing** must be made in writing by e mail to **nationalcourtadmin@motorsportuk.org** and must be simultaneously copied to **legal@motorsportuk.org**. The application must respect **Art.4.15** of this **PD** and set out the full grounds and reasons for the requested adjournment.

16. Publication of Decisions and Penalties

16.1. Every **Licence Holder** is deemed to agree that the **FIA**, the **ASN** and the **National Court** all have the right to publish details of any **Decision** of the **National Court**, penalised persons, bodies, vehicles or makes of vehicle, and if it so desires, the reasons therefor. Those individuals and bodies referred to have no right of action against the **FIA**, the **ASN** or the **Court**, or against any printer or publisher of the information, and may incur additional penalty including **Exclusion** if any such action is taken.

16.2. **Suspension or Exclusion of a Make of Vehicle.** The **National Court** can suspend a make of vehicle within its own territory for breach of these **Regulations** by the manufacturer or their accredited representative, or for reasons of safety.

16.3. **Reciprocity of Penalties** Subject to right of **Appeal** to the **National Court** in accordance with **Part B** the **ASN** will not issue a **Licence** and will withdraw any **Licence** already issued by the **ASN** to any person who is suspended or excluded by:

a. Motorsport Ireland or any other **ASN**

b. the Auto-Cycle Union or

c. the Speedway Control Board.

16.4. **Loss of Award** Any **Competitor Disqualified**, **Suspended** or **Excluded** at any **Event** shall thereby forfeit all right to any award in that **Event**.

16.5. **Amendment of Placing and Awards** In the cases referred to at **Art.15.1 above** and as a consequence of any **Decision** of the **Court** any resulting amendment to the placings and awards will be published and the body imposing the penalty will decide whether the next **Competitor(s)** in order (after those placed) shall be advanced.

16.6. **Recording of Judicial Hearings**

16.7. Only audio or video recordings by the **Officials** of the **Event** or **National Court** (official recordings) of **Judicial Hearings** are permitted. Such recording shall be on a suitable secure digital recording device under the control of the **Organisers** or the **Court** as the case may be.

16.8. A **Competitor** is not permitted howsoever to record any **Judicial Hearing** and breach of this obligation shall be a breach of these **NCR**.

16.9. The official recording shall not be edited and shall be securely retained by the **Organisers** for a minimum period of 70 days following the last day of the **Event** at which the **Hearing** took place or if it takes place otherwise than at an **Event** then 70 days next following the date of the **Hearing**.

16.10. The fact of the official recording must be notified to all participants at the commencement of the **Hearing** and shall be noted on the relevant **Judicial Decision** and referenced in any written notes.

16.11. The official recording shall be surrendered to the **ASN** or to the **National Court** on demand. If it is not demanded within the above time-limits then it shall be disposed of securely.

16.12. No part of any official recording nor any transcript of it shall be published broadcast or distributed howsoever, including through any social media.

16.13. Any official recording may be considered as evidence by the **National Court** and by the **Stewards of the Event** where any dispute between the parties to the **Appeal** arises as to the evidence given before another Judicial body at the **Event** or any **Hearing** other than at the **Event**.

16.14. An **Appellant** proceeding before the **National Court** shall be entitled to be provided with a copy of the official recording only for the purposes of preparing for that **Appeal** or appearing before the **Court** and otherwise subject to the provisions of this **PD**.

16.15. **Duality of process**: Any **ASN Licence Holder** penalised at the instance of **FIA Courts** or any other **ASN National Court** may nonetheless be subject of proceedings and penalty before the **ASN National Court** as though the matters had arisen in the jurisdiction of this **ASN**.

17. Review of Decisions

17.1. The **Court** has inherent authority in its entire discretion to **Review** any **Decision** it has made in accordance with **App.10** In such matters the **Court** may give such **Directions** and hold such **Hearings** as it deems necessary.

17.2. The **ASN** may refer a matter already decided back to the **Court** for reconsideration of any Decision the **Court** has made in circumstances where it appears to the **ASN** that there exists some new material element.

Appendix 8 - Breaches of Technical Regulations

1. Breaches of **Technical Regulations** fall into 4 categories and all are treated identically under this Appendix. The categories are:

    a. **Technical Regulations** under Ch.9 for **Competitor Personal Safety Equipment** '**PSE**'

    b. **Technical Regulations** under Ch.7 – **Vehicles and Vehicle Safety Equipment** – and Ch.8 – **Permitted fuels and Tyres and Testing**

    c. **Technical Regulations** provided by any specific sporting **Regulations** in the Ch.12 - 21

    d. **Technical Regulations** mandated in **Official Document**s - **Championship** / **Series** or **Supplementary Regulations** including any **Class Regulations**.

    Guidelines Penalties for such breaches are detailed in Art.2.8.

1.1. Breach of a **Technical** Regulation as determined by **Judicial Eligibility Decision** renders **PSE** or the **Vehicle** or any component ineligible to take part in the relevant **Competition**.

1.2. Subject to Art.1.5 below the **Eligibility Decision** is made by the **Clerk of the Course** (or by the **Championship Stewards** where the **Clerk of the Course** has no **Championship** function) or the **Stewards of the Event** where they have jurisdiction over the matter ('the relevant **Judicial** body').

1.3. The **Eligibility Decision** can only be made following:

    a. a **Judicial Hearing** arising from a **Non-Compliance Report** made by the **Technical Official**(s) appointed by the relevant **Organiser** of the **Competition** (or by the **ASN**) or

    b. a valid Protest from a **Competitor** (App.11) and consequential **Non-Compliance Report** made by a **Technical Official(s)** appointed for the purposes of the Protest.

1.4. A **Non-Compliance Report** must be provided to the **Judicial** body signed by the relevant **Technical Official**(s). The **Report** must specify the alleged breach. Where available the **Report** should be supported by relevant supporting documentation It is not necessary but is preferable for the **Non-Compliance Report** to be counter-signed by the relevant **Competitor** to merely acknowledge receipt of a copy; that signature shall not be construed as an admission of non-compliance but a refusal to sign shall be recorded.

1.5. Exceptionally a **Vehicle** may be declared by the **ASN** to be in breach of **Technical** and or **Safety Regulations** and shall thereby be Suspended under App.2 Art.7.8 to this Chapter. This **Suspension** shall be on an interim basis and the matter shall be referred to the **National Court** in accordance with App.1 Art.1.15 and the **Judicial Practice Direction** at App.7.

1.6. **Organiser**s of **Competition**s (or the **ASN**) shall appoint **Technical Officials** of the grade(s) appropriate to the **Competition** and all those so appointed have authority to examine **PSE** and **Vehicle**s and components for the purposes of **Competition** eligibility and conformity with the relevant **Regulations**.

1.7. Where a **Technical Official** finds a breach of **Regulations** the matter shall be reported to the relevant **Judicial** body by **Non-Compliance Report** UNLESS that **Technical Official** is satisfied that the breach can be rectified and the **Vehicle** or item can be re-presented in conformity prior to the commencement of the **Competition**. This action shall however be noted on the **Event Technical Report** and shall be recorded in any **Vehicle Technical** Passport. This Art.1.7 shall be read subject to any specific **Championship** provisions in the case of **Vehicle**s and **Competition**s subject to **HTP Regulations** where corrective action may be deferred to a specified future date or **Event**.

1.8. Where a **Non-Compliance Report** is signed by two (2) members of **ASN** (or **FIA**) **Technical Commission** OR by one (1) member of the **Technical** Commission and the **Event Chief Scrutineer** it shall be considered a **Judgement of Fact** and is an **Official Document**.

1.9. The relevant **Judicial** body must then conduct a **Judicial Hearing** respecting App. 3 to this Chapter and consider if there is any 'exceptional reason' why a penalty of **Disqualification** should not be imposed. To

impose **Disqualification** or not pursuant to a **Judgement of Fact** is a binary **Decision** and no other penalty may be substituted except before the **National Court**. The **Judicial Decision** is an **Eligibility Decision**.

1.9.1 **Procedures** at **Short Circuit Kart Events** shall be conducted in accordance with **Ch.18 App.6 Art.3**.

1.10. If the **Judicial** body considers there to be no such 'exceptional reason' then the **Judicial** body must **Disqualify** the **Vehicle** or item from participation in the relevant **Competition** or part of the **Competition** and the **Competitor** shall not be placed in the **Results** of the relevant part(s) of the **Competition**. The **Eligibility Decision** is an **Official Document**.

1.11. The **ASN** may refer any **Judgement of Fact** and or **Eligibility Decision** or any **Non-Compliance Report** to the **National Court**.

1.12. If the **Judicial** body considers that there are exceptional reasons not to impose **Disqualification** then this must be noted on the relevant **Judicial Decision** and which shall be an **Official Document**.

1.13. Any **Technical Official** appointed to the **Event** or **Competition** may present a **Non-Compliance Report** to the relevant **Judicial** body who may take **Judicial** action respecting **App. 3 to this Chapter** and where a **Decision** by that **Judicial** body that an item is not eligible may be the subject of available **Penalty**.

1.14. **Technical Eligibility Appeals** are not heard by the **Stewards** of the **Event** but are referred directly for consideration by the **National Court** pursuant to **App.4 Art.1.2** (See special procedure in **App.7 Part C**.).

1.15. Further to **Art.1.14** above, where a **Competitor** seeks only to challenge the penalty imposed in relation to a technical non-compliance (and the non-compliance itself is not contested) the **Stewards** may consider a properly lodged **Appeal**.

1.16. An **Eligibility Appeal** must be commenced in conformity with **App.4 Arts.1.5–1.10 and 1.15**.

1.17. Subject to **Art.1.19** below where a **Vehicle** entered for an **Event** is the subject of a pending technical examination the **Competitor** must notify the **Clerk of the Course** before the commencement of the **Competition** at the **Event**. Breach of this Regulation may be subject to a Fine but only following a **Judicial Hearing** pursuant to **App. 3 to this Chapter.**

1.18. Contrary to **Art.1.17** above where such a pending technical examination is at the instance of the **Championship Organiser**s (for example pre-**Competition** sealing) then it is the responsibility of the **Championship Organiser** to notify in writing the **Clerk of the Course** of the **Vehicle**s and **Competitor**s so affected. This notification shall be an **Official Document**.

1.19. In all cases where **Art.1.17 or 1.18** applies then the **Competition Results** potentially affected must be declared and shall remain provisional until the conclusion of all relevant **Judicial** proceedings including any **Decision** of the **National Court**.

1.20. An **Eligibility Decision** made at a **Race Event** after **Practice** shall subject to **Art.1.9** above result in a **Judicial Decision** of **Disqualification** of the **Vehicle** from the **Results** of that session.

1.21. If a **Vehicle** subject of a **Decision** under **Art.1.20** above is thereafter approved as eligible in writing by signed timed **Eligibility Notice** from the **Technical Official**(s) to the **Clerk of the Course** then the **Competitor** may be permitted by the **Clerk of the Course** to take part but shall be placed at the back of the grid with a 10 second delayed start, providing that it does not take the place of any vehicle already qualified (whether a reserve or not).

1.22. If multiple vehicles have been **Disqualified** under **Art.1.20** and are then approved under **Art.1.21** the grid order of those **Vehicle**s shall be determined by the time at which the relevant approval under **Art. 2.2** was given as evidenced by the **Eligibility Notice**.

1.23. If a vehicle or component is not made available for an eligibility examination as required by the **Technical Commissioners**, the **Clerk of the Course**, the **Championship Organisers** or their respective **Stewards**, or a **Competitor** declines to accept potential liability for stripping, examination and rebuilding costs, the vehicle or component will be deemed ineligible and reported to the **Clerk of the Course** or the **Championship Stewards**, as the case may be, for the application of the penalties as detailed in **Art.2.2 - 2.5**.

1.24. If a **Vehicle** is found not to comply with the applicable **Technical Regulations** - whether set out in these

NCR, **Championship Regulations**, or **Supplementary Regulations** - it shall not be accepted as a defence or a mitigating factor that no advantage was gained or intended.

2. Consequences of an Eligibility Decision made in a Championship or Championship Event

2.1. The following Arts do not apply in respect of **Art.1.21** above. In the event of a **Vehicle** being disqualified from the results of a **Championship** or **Championship Event** in accordance with **Art.1.10** or **Art.1.11**, all **Race** or **Kart Championships** will apply the **Penalties** detailed in **Art.2.2**, all **Rallycross Championships** will apply the **Penalties** detailed in **Art.2.3** and all other **Championships** will apply the **Penalties** detailed in **Art.2.4. Penalties** may be applied even if a **Competitor** has retired from an **Event**. Motorsport UK may insist on additional conditions being included in **Championship** regulations.

2.2. Unless the regulations for a **Championship** specify a different penalty, any **Competitor** in a **Race** or **Kart Championship** whose vehicle is disqualified from the results in accordance with **Art.1.10** or **Art.1.11**, will be subject to the following **Championship** penalties. These will be applied whether the **Championship** is for **Drivers** or **Entrants**.

a. The **Competition** will be counted as one of the events contributing to their total **Championship** score and

b. The **Competitor** will be disqualified from the **Competition**, forfeiting all **Championship** points, prize money and other awards relating to the **Competition** or relevant part of the **Competition**; and

c. The **Competitor** will forfeit a total of points equal to those obtained from two first places, even if this penalty results in a minus total of points.

2.2.1 The **Penalty** imposed under **Art.2.2.c** can only be waived by the **National Court** on **Appeal**, but the **Event Secretary**, the **Clerk of the Course** or their **Deputies** must be notified of the **Intention** to **Appeal**. This **Penalty** will only be waived in exceptional circumstances. **Championship Co-ordinators** do not have the power to decide whether a penalty should be applied or waived.

2.3. Any **Competitor** taking part in a **Rallycross Championship** and whose **Vehicle** is disqualified from the results in accordance with **Art.1.10** or **Art.1.11** will be penalised as follows:

a. The **Vehicle** will be disqualified from the relevant **Results**; and

b. The **Competition** or part of the **Competition** from which the **Vehicle** was disqualified will count as one of the events contributing to the **Competitor**'s total **Championship** score; and

c. The affected **Competitor** will forfeit all **Event** and **Championship** prizes and awards relating to the **Competition** or relevant part of the **Competition**; and

d. For infringements deemed of a more serious nature, the relevant **Judicial** body may additionally rule that the **Competitor** will forfeit a total of points equal to those obtained from two first places, even if this **Penalty** results in a minus total of points.

2.4. Any **Competitor** taking part in a **Championship** (other than **Race**, **Kart** or **Rallycross**) for **Drivers**, co-**Drivers** or **Entrants**, whose **Vehicle** is disqualified from the results in accordance with **Art.1.10** or **Art.1.11** will be penalised as follows:

a. The affected **Competitor** will forfeit all **Event** and **Championship** prizes and awards relating to the **Competition** or relevant part of the **Competition** and

b. The relevant **Competition** or part of the **Competition** shall be treated as a scoring element of the **Championship** and zero points shall be recorded and

c. The round will count as one of the events contributing to their total **Championship** score.

These **Penalties** may not be decreased, but may be increased, by the **Championship** regulations which can only be applied by the **Championship Stewards** after a **Hearing**. **Penalties** imposed can be appealed to the **National Court**, but the **Championship Co-ordinator** must be informed of the **Intention** to **Appeal** in accordance with **App.7**. **Penalties** will only be reduced in exceptional circumstances.

2.5. The penalty at **Art.2.2.a**, **2.3.b**, **2.4.b** above may only be **Appealed** to the **National Court** as an **Eligibility Appeal** under **Art.1.15** above.

2.6. Where relevant, the **Penalties** at Art.2.2 –2.4 above also apply in the case of **Manufacturer Championship** awards. This **Penalty** cannot be **Appealed** per se but will be removed if the **Competitor** brings a successful **Appeal** to the **National Court** under **Art.1.16** above.

2.7. **Guideline Penalties for Technical Breaches**
A schedule of suggested **Penalties** is provided within the **Judicial Procedures Guidelines** published on the Motorsport UK Website.

CHAPTER 2 JUDICIAL

Appendix 9 - Protest Procedure

1. Protest Procedure

1.1. A **Protest** is an inter-**Competitor** challenge alleging that another **Competitor** is in breach of the **Regulations** of the **Competition** or a Competitor challenge in the circumstances listed in **Arts.1.1.1.a and b.** The overarching principle engaged in bringing a **Protest** is that of sporting fairness in the **Competition** accordingly it is a breach of the **NCR** to bring a **Protest** in bad faith.

1.1.1. A Protest can be filed against:

a. The Acceptance of an Entry of a Competitor or Driver;

b. The length of the Course;

c. An alleged error, irregularity or breach of the NCR occurring during an Event;

d. The alleged non-compliance of a vehicle with the NCR;

1.2. The general principle is that a **Protest** must be brought at the earliest possible time that an alleged breach of the **Regulations** has come to the attention of the **Protestor**. It is not permissible to have any knowledge or suspicion of actual or potential breach of the **Regulations** and then to wait and see what happens during the **Competition**. Any such action will be deemed an act of bad faith for the purposes of Arts.1.1 and 1.2 but this does not limit any other finding of bad faith.

1.3. The **Competitor** bringing the **Protest** is the **Protestor**.

1.4. The **Competitor** responding to the **Protest** is the **Protestee**.

1.5. A **Clerk of the Course** or where applicable the **Stewards of the Event** may investigate any on-**Track** incident or occurrence concerning a possible breach of the rules of the **Competition** regardless of any **Protest**.

1.6. A single **Protest** cannot be brought against or by multiple **Competitor**s. A separate **Protest** must be brought by and against each relevant **Competitor**. Where a **Protest** relates to multiple **Vehicles** then individual **Protest**s must be lodged in respect of each **Vehicle**.

1.7. A **Protest** must be in writing signed by the **Protestor**. It is not obligatory to use any form provided by the **Organiser** or the **ASN**.

1.8. A **Protest** must be lodged with the **Event Secretary**, the **Clerk of the Course**, or their **Deputies**. The **Clerk of the Course** or the **Stewards** shall be notified immediately.

1.9. A **Protest** must be accompanied by a signed undertaking to pay that **Fee**. The relevant **Fee**s are published annually by the **ASN** and can be found in App.10 to this Chapter and in Ch.1 App.2.

1.10. A **Protest** must under pain of rejection detail all of:

a. The date

b. The **Event**

c. If applicable the number of the race

d. The **Competitor Entrant** details including **Licence** Number and **Vehicle** number

e. The **Competitor Entrant** e mail address and at-**Event** mobile telephone number

f. The **Competitor** and/or **Vehicle** protested against

g. The detailed reasons for bringing the **Protest** including any relevant **Regulations**

h. The identity of any witnesses if appropriate

i. The relevant **Official Document**s

1.11. Specific regulations at Art.1.8 to 3.2 below apply to all **Technical Eligibility Protests**.

1.12. The **Protest** will be determined by the **Clerk of the Course** unless the **Stewards of the Event** are responsible for **Judicial** matters at the **Event**. App.3 of this Chapter applies to the process of adjudication of the **Protest** subject as provided below in respect of any **Technical Eligibility Protest**.

1.13. All prizes and awards shall be suspended until the completion of any **Protest** including all **Appeal**s.

1.14. **Time Limits for bringing a Protest are as follows.**

a. A **Protest** other than a **Technical Eligibility Protest** must be brought as soon as practicable but in any event within 30 minutes of the publication of the **Provisional Results** of the **Competition** at the relevant **Event**.

b. A **Technical Eligibility Protest** must be brought as soon as the **Protestor** has any knowledge of or suspicion that the **Protestee**'s **Vehicle** does not conform to the relevant **Technical Regulations** and at the latest

i. Where the reason for the alleged ineligibility is apparent then the **Protest** must be brought within 30 minutes of the conclusion of the relevant scrutineering of the **Vehicle**.

ii. Where the reason for the alleged ineligibility is not apparent but the performance of the **Vehicle** suggests that it is ineligible or that some part or parts may have been changed since the **Vehicle** was first scrutineered at the **Event** in question then the **Protest** must be brought within 30 minutes of the performance giving rise to the suggested ineligibility.

c. A **Protest** must be brought within the **Time Limits** provided above but the **Clerk of the Course** or the **Stewards** if they are responsible for adjudicating the **Protest** has the discretion to accept a **Protest** submitted outside of the stated **Time Limit** if in their entire discretion it is considered to have been impossible or impractical to have lodged the **Protest** within the relevant **Time Limit**. The granting or refusal of such extension of time must be recorded as a **Decision** and is an **Official Document**. **Refusal** may be the subject of an **Appeal**.

2. The procedure to be followed in respect of a Technical Eligibility Protest is as follows.

2.1. The **Clerk of the Course** or the **Stewards** where applicable shall order that the vehicle or any relevant **Protested** component of it shall be examined by a member of the **ASN Technical Commission** and the **Chief Scrutineer** or the **Chief Scrutineer** and relevant **Eligibility Scrutineer** as soon as reasonably practicable.

2.2. Whenever possible the examination should involve a member of the **ASN Technical Commission**.

2.3. The examination must be in the presence of the **Protestee** or a representative of the **Entrant** where applicable but the **Protestor** is not entitled to be present or represented.

2.4. The **Vehicle** and or any component subject of the **Protest** may be sealed for subsequent examination at the request of the relevant **Judicial Official** or the **Protestee** or at the request of a member of the **Technical Commission** or the **Chief Scrutineer** and then the relevant **Judicial Official** shall require the member of the **Technical Commission** or the **Chief Scrutineer** to apply the relevant seals and Report in writing to the relevant **Judicial Official** identifying the location of all seals and their seal numbers.

2.5. Any sealing of **Vehicle** or component(s) must be undertaken in the presence of the **Protestee** but the **Protestor** is not entitled to be present or represented.

2.6. Where the **Vehicle** or any component of it has been sealed for subsequent examination then the **Protestee** may continue to compete until such time as the **Protest** has been adjudicated but cannot make any works or alteration to the sealed **Vehicle** or any sealed component(s) of it until such time as it has been examined except with the written permission of the relevant **Judicial Official** and under the supervision of the **Chief Scrutineer**.

2.7. Where a **Vehicle** has been sealed for subsequent examination and continues to compete then the results of the relevant **Competition**(s) shall remain provisional until the adjudication of the **Protest** is complete including any **Appeal**s.

2.8. Where the examination of the **Vehicle** or any component involves any dismantling and or stripping and or mechanical work then the **Protestee** must undertake that work in the presence of the **Scrutineers**. In the case of an engine or transmission or electrical component then the **Protestee** may require that the work shall be undertaken by the engine or transmission builder or **Vehicle** electronics engineer in the presence of the **Scrutineers** in which case Arts.2.3 – 2.7 above apply.

2.9. Where the examination of the **Vehicle** or any component involves any dismantling and or stripping and or mechanical work then the relevant **Judicial Official** shall request the parties to attend and to endeavour to agree the associated costs of stripping and reassembly but in default of such agreement the estimated cost shall be determined by the **Clerk of the Course** in consultation with the **Stewards** but if the relevant **Judicial Official** is the **Stewards** then they alone shall determine the estimated cost and in all cases acting reasonably. The costs or estimated costs as the case may be must include the **ASN** costs and direct expenses of the **Technical Commissione**r and any **Scrutineers** in conducting the examination as provided by the **NCR** and App.10 of this Chapter. This cost decision shall be recorded on the **Protest**.

2.10. If the **Vehicle** or component(s) cannot be examined immediately at the **Event** then the costs determined at Art.2.9 above must be deposited with the **ASN** by the **Protestor** within 7 calendar days of the lodging of the **Protest**. If they are not deposited within 7 calendar days then the **Protest** shall be null and void and the **Protestor** shall then be deemed to have acted in bad faith and Arts.1.1–1.3 above shall apply.

2.11. If a **Protest** is upheld the **Protestor** shall receive a refund of the amount paid as the **Protest Fee** and **Protestee** shall bear all the actual costs of the examination and the relevant sum must be paid to the **ASN** within 7 calendar days. If those costs are not so paid then the **Protestee**'s **Competition Licence**(s) shall be suspended forthwith by the **ASN** and the **Protestee** may be referred to the **National Court**.

2.12. If a **Protest** is rejected then the **Protestor** shall bear all the costs and shall accordingly forfeit the sum deposited pursuant to Art.1.28 above. If the estimated costs are lower than the actual costs then the **Protestor** must pay the balance of the actual costs to the **ASN** within 7 calendar days and if those costs are not so paid then the **Protestor**'s **Competition Licence**(s) shall be suspended forthwith by the **ASN** and the **Protestor** may be referred to the **National Court**. If the estimated costs are higher than the actual costs then the surplus deposit will be refunded to the **Protestor** by the **ASN**.

2.13. Following examination the **Scrutineers** shall report in writing to the relevant **Judicial Official**.

2.14. Upon receipt of the **Protest Technical Examination** Report the relevant **Judicial Official** shall convene a **Judicial Hearing** as soon as practicable and which shall be conducted in accordance with App.3.

2.15. The **Judicial Protest Decision** will record any decision regarding the actual costs of any examination.

3. Forfeiture of Protest Fees

3.1. A **Protest** may be withdrawn at any time before the commencement of the **Protest Hearing** (or in the case of a **Technical Eligibility Protest** before the commencement of the examination) however the **Protest Fee** and any associated deposit shall be forfeit and Arts.1.1–1.3 above apply.

3.2. Unless otherwise decided by the relevant judicial body for special reasons the **Protest Fee** shall normally be forfeit if a **Protest** fails for any reason.

4. Protest Decisions

4.1. The **Judicial Protest Decision** may be **Appealed** in accordance with App.4 and or App.6 and App.7 where applicable.

CHAPTER 2 JUDICIAL

Appendix 10 - Right of Review

1.1. Subject to payment of the **Fee** (**Art.1.4 below**) a party has the right to request the review of a decision if, in **Competitions** forming part of an **ASN Permitted Championship**, cup, trophy, challenge or series, a significant and relevant new element is discovered which was unavailable to the parties seeking the review at the time of the decision concerned. No such right exists for third parties to seek the review of a decision made concerning another **Competitor** except where a **Protest** has been lodged.

1.2. The **Clerk of the Course** or the **Stewards** who have given a ruling or, failing this, a person or body designated by the **ASN** for the purpose ('the **Review Body**') may decide to re-examine their decision following a written request for review by:

a. Any one of the parties concerned being a party that is directly affected by the decision handed down, or

b. the **ASN Legal Department** on behalf of the **ASN**.

1.3. The **Clerk of the Course** or the **Stewards** also have the right, of their own volition, to instigate such a review if they themselves discover a significant and relevant new element which was unavailable to them at the time of the decision concerned. No fee is payable in this case but the fact of the **Review** must be notified to: **legal@motorsportuk.org**.

1.4. A party seeking the **Review** of a **Decision** must:

a. Where submitted at an **Event**, submit the **Application** to the **Event Secretary** together with a **Fee Undertaking**. The **Fee** is that applicable to a **Protest** at the relevant **Event**.

b. Where submitted after the conclusion of the relevant **Event** submit the **Application** with **Fee** to the **ASN** electronically to: **legal@motorsportuk.org**

1.5. Where the **Application** is submitted at the **Event** then the relevant **Judicial** body:

a. may determine the matter at the **Event** or subsequently in accordance with the remainder of this **App.10**.

b. must copy the **Application** and **Fee Undertaking** to **legal@motorsportuk.org** and where one is appointed then to the **ASN Steward** to be included in the **Steward's Event Report**.

1.6. The **Application** for **Review** must, subject to **Art.1.16 below**, be submitted with a **Fee Undertaking** no later than 7 calendar days next following the date of the **Decision**.

1.7. The **Review** process must be concluded in accordance with **Art.1.14** and **Art.1.17** and the **Decision** must be published as an **Event Official Document** and must be copied to **legal@motorsportuk.org**.

1.8. The **Review Body** must meet (in person or by other means) on a date determined in its discretion subject to **Art.1.7 above** to determine, on the written submission(s) provided, whether the element presented was all of:

a. Significant;

b. Relevant;

c. New; and

d. Unavailable to the parties seeking the review at the time of the Decision.

1.8.1 The party or parties requesting the review have the right to request a **Judicial Hearing**, and, in such case, the **Review Body** must summon the party or parties concerned to hear any relevant explanations and in the **Review Body**'s judicial discretion to then consider any evidence not previously available and so to judge on the matter in the light of the facts and elements brought before them.

1.9. A party is not entitled to be represented at any hearing other than those conducted by the **National Court** or the **International Court of Appeal**. A **Driver Competitor** may be accompanied by a representative of their **Entrant**.

1.10. Pending determination by the **Review Body** a review has no suspensive effect on the execution of the original decision of the **Clerk of the Course** or the **Stewards** when they have given a ruling.

1.11. The **Review Body** shall have the sole discretion to determine if a significant and relevant new element exists and, if so, to determine if the original decision including any penalty shall stand or be set aside or varied. This **Decision** must be recorded and forms part of the **Official Document**s of the **Event**.

1.12. The decision of the **Review Body** as to whether or not such an element exists is not subject to appeal before any further judicial body.

1.13. If the **Review Body** determines that a significant and relevant new element does exist and therefore progresses to a re-examination of their original decision, the **Review Body** must hold a **Hearing** and summons the party or parties concerned irrespective of whether they have exercised the right to a **Hearing** under **Art.1.8.1**. The subsequent decision of the **Review Body** as to whether the original decision shall stand or be set aside or varied may be appealed.

1.13.1 In the event that the original **Decision** is set aside or varied such that it affects the results of the **Competition** concerned those results shall be amended accordingly even if they have previously been declared to be final.

1.14. The **Review Body** should complete the **Review** and provide a **Decision** within 7 days of the **Right of Review** request where possible and in any event within 14 days of receipt of the application.

1.15. The time limit for providing a **Right of Review Decision** in **Art.1.14** above may be extended only by express permission in writing from the **ASN Legal Team**.

1.16. Within the framework of an **ASN Permitted Championship**, cup, trophy, challenge or series, a request for review may not, in any **Event**, be brought less than four calendar days prior to the date of the relevant prize-giving ceremony following the end of the **Competition** concerned.

1.17. The right of appeal against a new decision, subject to **Art.1.8.1** and in accordance with **Art.1.9 above**, is confined to the circumstances permitted by **Ch.2 App.4 Art.1.1** (**Appeals** from the **Clerk** to the **Stewards**) and **Ch.2 App.6** and **7** (**Appeals** from the **Stewards** to the **National Court**) (as appropriate) and is limited to the party or parties concerned thus no right of appeal exists for third parties.

1.18. Should the first decision already have been the subject of an appeal before the **Stewards**, the **National Court** or before the **International Court of Appeal**, or successively before more than one of these judicial bodies, the case shall be submitted only to them for the possible revision of their previous decision.

1.19. Unless otherwise decided by the **Review Body**, **Right of Review Fee**s will be forfeited if the **Right of Review** is not upheld. A **Right of Review** can be withdrawn before the hearing, but the **Right of Review Fee** will then only be refunded at the **Review Body**'s discretion.

CHAPTER 2 JUDICIAL

Appendix 11 - Fees and Fines and Obligations

1.1. Specific **Appeal Fees** and **Protest Fees** and maximum **Fines** available to the various **Judicial** bodies are listed in **Ch.1 App.2** (**Fees and Fines**).

1.2. **Time Limit for Payment of Fines**. **Fines** or costs must be paid to the **ASN** within 7 days of being imposed. Any delay in making payment shall result in suspension of licence for the period during which the amount remains unpaid beyond the said period of 7 days.

1.3. **Liability to Pay Fees, Fines and / or Costs**. Where an **Entrant** is responsible for the payment of any **Fee**, **Fine** and / or costs then in the event of non-payment the **Entrant** can be suspended in the same way as the person on whom the **Fine** or costs have been levied.

1.4. The **ASN** may take proceedings for the recovery of any outstanding **Fee, Fine** or costs in any relevant civil court to include the costs of such recovery.

1.5. **Allocation of Proceeds from Fines**. The proceeds from all **Fines** are remitted to the **ASN** who will use them only for the provision of prizes, training or for charitable purposes.

CHAPTER 2 JUDICIAL

Appendix 12 - Penalty Points

1.1. When a penalty that incurs penalty points is imposed by the **Clerk of the Course** or the **Stewards of the Event** details must be recorded on the **Judicial Summary Sheet** together with the number of penalty points imposed.

1.2. Penalty points will be imposed for the following offences:

a. Driving – breach of **Ch.2 App.1 Art.1.13**, **Ch.12 App.7 Art.1.2**, **Ch.12 App.7 Art.1.5**, **Ch.12 App.7 Arts.1.7 – 1.9, Ch.12 App.7 Art.1.12** and / or

b. Failure to comply with **Signals**.

c. General Conduct – Abuse, physical assault or threats of physical assault (**Ch.2 App.1 Art.1.1**).

d. Failure to obey the instructions of an **Official** (**Ch.6 App.1 Art.2.4**).

1.3. For **Short Circuit Karting**, **Rallycross** and **Autocross** only **Art.1.2.a** driving, and **Art.1.2.b** failure to comply with flag or light **Signals** does not apply.

1.4. 'Stop-Go' or 'Drive Through' penalties (**Ch.12 App.10 Art.2.1**), are not subject to penalty points and neither is there any right of appeal against either the decision for imposing the penalty or the penalty itself. This includes any such penalties converted to time penalties in accordance with **Ch.12 App.10 Art.2.1.l**.

1.5. The number of points will be determined by reference to the type of penalty imposed.

a. Verbal warning – 0 points (not recorded on licence)

b. Written reprimand – 2 points

c. Fine, Time, Grid Place or Position / lap penalty – 3 points

d. Disqualified from **Practice,** heat, **Race** or a **Competition** – 4 points

e. Disqualified from the **Event** – 6 points.

1.6. Should a **Competitor** receive twelve penalty points within a period of twelve calendar months, it will result in referral of that **Competitor** to the **National Court** by the **ASN** for consideration of further penalty.

1.7. The **National Court** shall have no jurisdiction to consider the **Competitor's** guilt in respect of the offences detailed in the relevant endorsements. The form of any further penalty shall be entirely at the discretion of the **National Court**.

1.8. Unless the **National Court** makes an **Order** to the contrary, once any further penalty imposed by the **Court** has been served by a **Competitor** the penalty points relied on for that **Decision** will be annulled.

CHAPTER 2 JUDICIAL

Annexe A - Time and Place Penalties

1.1. **Time Penalty** means a penalty expressed in minutes and / or seconds.

1.2. **Place Penalty** means a penalty whereby the relevant **Competitor** is moved to a lower position in the relevant results compared to the position indicated immediately prior to the imposition of the penalty.

1.3. The **Clerk of the Course** or the **Stewards of the Event** may impose a penalty at **a.** or **b. below** for any **Competitor** considered to have obtained an unfair advantage (whether inadvertently or not):

a. A **Time Penalty** of up to one minute or a place penalty of up to 10 places.

b. In an **Endurance Race** or a **Race** including a mandatory pit stop, a time, place or lap penalty may be imposed. The penalty may be increased by one lap for each scheduled racing hour, (for example a 2 hour **Race** may impose a penalty of up to two laps). The penalty may be imposed after the **Race** has finished.

1.4. At **Short Circuit Kart Races** where a licensed **Timekeeper** is not present a time penalty cannot be applied, but a **Competitor** may be moved back up to five places in the results in lieu of a time penalty. Where a licensed **Timekeeper** is present either a time penalty or place penalty may be imposed. Any such penalty is not eligible for **Appeal** against either the decision for imposing the penalty or the penalty itself.

1.5. At **Short Circuit Kart Race Events** a **Competitor**, who is deemed to have gained an unfair advantage or has disadvantaged another **Competitor** by the manner of their driving will be penalised by a time **Penalty** of up to 10 seconds, or a Position **Penalty** of up to 5 places, or 1 lap, in the results of that **Race** or timed qualifying, and such **Penalty** is not eligible for **Appeal** against either the decision for imposing the **Penalty** or the **Penalty** itself. This **Penalty** does not preclude further action under **Ch.2 App.1 Art.1.3.** if deemed necessary after the hearing.

1.6. At short circuit **Kart Events**, where the **Clerk of the Course** has the ability to validate incidents during the **Race**, via circuit cameras with a nominated **Judge of Fact** an in **Race** 5 second time **Penalty** may be applied. This should usually follow the display of a warning **Signal** and cannot be subject to **Protest** or **Appeal**.

1.7. At **Race Events**, up to a 10 **Grid Place Penalty** may be applied at a **Driver's** future **Race** only where that penalty can be applied during that **Event** or the contested **Championship** or **Series**. In the event that a **Driver's** grid position prohibits them from serving the full **Penalty** the **Driver** will start from the back of the grid behind all other placed **Drivers**. The full **Penalty** will then be deemed to be served.

1.8. At **Short Circuit Kart Race Events** a **Competitor** with the front fairing not affixed precisely in accordance with **Ch.18 App.8 Art.18.2** when they arrive in **Parc Ferme** will be penalised with a 5 second **Penalty** (3 places if there is no licensed **Timekeeper**) in the results of that **Race** or if during timed qualifying deletion of their fastest lap time. This will be imposed automatically by the **Clerk of the Course** upon receipt of the statement received from the **Judge of Fact** and is not eligible for **Appeal** against either the **Decision** for imposing the **Penalty** or the **Penalty** itself. This **Penalty** does not preclude further action under **Ch.2 App.1 Art.1.13** if deemed necessary.

1.9. The mechanical failure **Signal** will not be shown to a driver whose front fairing is no longer in the correct position.

Chapter 3

Organisers

CHAPTER 3 - ORGANISERS

This Chapter is separated into the following appendices:

App.1 Permit Application Regulations

App.2 Permissions of Local and National Authorities

App.3 Warning Notices

App.4 Participant Undertakings and Declarations

App.5 Entries to Events

App.6 Publication of Results

App.7 Certificate of Exemption

App.8 Grade of Events

App.9 Fixture Lists

App.10 Official Documents

App.11 Rights of Organisers

1. General

1.1. **Competitions** may only be organised in the **ASN** territory by the **ASN** or an **ASN Registered Club** or **Clubs** in accordance with Art.2 below *or* by another organisation approved by the **ASN** for the promotion of motor sport *or* by **Authorised Entrants** organising a **Speed Record Attempt**.

2. Registration of Clubs

2.1. No **Club** may organise an **Event** unless it has first applied for registration with the **ASN** on the appropriate form and is a member of an **ASN Recognised Regional Association** where appropriate and has paid the appropriate annual **Registration Fee** (see **Ch.1 App.2).**

3. Necessary Permission

3.1. No **Event** or **Championship** or **Series** shall be held unless the **ASN** issued a **Permit** or the **Event** is of a kind for which the **ASN** has granted **Exemption from Permit** under these **Regulations** (see **Art. 14** below).

3.2. It is the sole responsibility of applicants to ensure that an application for a **Championship, Series** or **Event Permit** complies fully with the **NCR**.

3.3. The **ASN** at its absolute discretion may review any application (particularly those relating to its own UK **British Championships** so as for example to ensure compliance with a tender process) but it should be noted that the **ASN** does not approve **Championship, Series or Event Regulations** ('**Official Documents**') per se and specifically that the issuing of a **Permit** by the **ASN** shall not be taken as giving any such approval.

3.4. **Application**s for all **Permits** must be made on a form prescribed by the **ASN** in accordance with **App.1 to this Chapter.**

4. Permit Fees

4.1. The scale of **Fees** payable to the **ASN** on the grant of an organising **Permit** is laid down in **Ch.1 App.2**

5. Warning Notices

5.1. Warning Notices should be prominently displayed as appropriate at all Permitted **Event**s in accordance with **App.3 to this Chapter**.

6. Understandings Declarations and Undertakings by Entrants Drivers and Passengers

6.1. Every **Entrant, Driver** and **Passenge**r before taking part in any **Competition** must sign an undertaking in the form prescribed in **App.4 to this Chapter.**

7. Entries

7.1. When an **Organising Permit** has been granted the **Organisers** may invite receive and accept **Entries** from eligible **Competitors** in accordance with **App.5 to this Chapter.**

8. Contents of Programme

8.1. It is not compulsory to publish a **Programme** but an official list of entries and officials must be made available to all **Competitor**s and **Officials** by the **Organisers**.

9. Publication of Results

9.1. Detailed **Results** in writing must be made available for inspection by any **Competitor** in accordance with **App.6 to this Chapter.**

10. Payment of Starting and Prize Money and Presentation of Awards

10.1. Unless the **Official Documents** stipulate otherwise the **Organisers** shall distribute all **Awards** including any monies within 21 days after the results of a **Competition** have been finalised.

11. Scrutineering

11.1. An **ASN** licensed **Scrutineer** of the appropriate grade must take charge of the **Scrutineering Team** at all **Races**, **Speed Events**, **Kart Races**, **Road and Stage Rallies**, **Competitive Safaris**, **Hill Rallies** and at all other **Event**s of **National** or **International Status**. For all other **Event**s the scrutineering may be carried out by a suitably experienced **Scrutineer** appointed by the **Organiser**s.

12. Procedure for the Testing of Fuel (Chapter 8)

12.1. The following regulations must be read in conjunction with **Ch.8 App.1** and **2**.

12.2. **Fuel** testing may be carried out at any time, before during or after a **Competition** on the instructions of any of the **ASN** the **Clerk of the Course, Technical Commissioner, Chief Scrutineer, Eligibility Scrutineer** or the **Stewards of the Event**.

13. Tyre testing procedure for the investigation of performance enhancing products (TTP)

13.1. The following regulations must be read in conjunction with **Ch.8 App.3.**

13.2. **TTP** may be carried out at any time before during or after a **Competition** on the instructions of any of the **ASN** the **Clerk of the Course, Technical Commissioner, Chief Scrutineer, Eligibility Scrutineer** or the **Stewards of the Events**.

14. Certificates of Exemption

14.1. **Clubs** organising **Events** of the type specified in **App.7 to this Chapter** may be granted a **Certificate of Exemption** providing application is made to the **ASN** not less than four weeks prior to any announcement of the **Event**.

14.2. A **Certificate of Exemption** from **Regulations** indicates that there is no right of **Appeal** to the **National Court** and that provided the **ASN** has granted specific approval members of unrecognised clubs or

members of the public may participate but not officiate at such **Events.**

15. Insurance

15.1. The **ASN** provides **Insurance** in respect of legal liability for all **Events** authorised by a **Permit**. The **Insurance** specifically names:

a. **Motorsport UK** Association Ltd.

b. The **Motorsport UK Registered Club** organising the **Event**.

c. The officials appointed by a. and b. above.

d. The **Entrant** and **Driver** (in races, speed **Events**, **Autotest**, **Special Stages** and the private land section of **Trials** and **Cross-Country Events**).

e. The landowner or any Government or Local Authority.

f. Any **Track** or Circuit owner or sponsor.

Further details are given in **Ch.1 App.3** and attention is drawn to the exclusions detailed.

15.2. The **Organisers** shall pay all **Fees** due in respect of this **Insurance** as set out in **Ch.1 App.3** and shall comply with the terms of the **Master Insurance Policies** provided by the **ASN** the principal terms of which are summarised in **Ch.1 App.3**.

16. Unauthorised Competitions

16.1. The organisation or holding within the territory of the **ASN** of any **Vehicle Competition** otherwise than in accordance with these **Regulations** shall render every person connected with or taking part in it whether as promoters, organising committee, **Competitor**, official or otherwise liable to the consequences as a breach of these **Regulations**. If such a **Competition** is included in an **Event** for which an organising **Permit** has been granted the Permit may be declared null and void. The **Organisers** may be ordered to return to the **Entrants** all **Entry** fees received in relation to that **Event**.

17. Procedure for Control of Drugs

17.1. **Organisers** must respect and publish in **Official Documents** that the **ASN** has the right to require **alcohol and illicit drugs testing** on any person howsoever connected with any **Entry** operating within a **Permitted Event** and must cooperate fully with the relevant procedures. These procedures are in addition to and not in substitution for any procedure undertaken by or at the instance of **UK Anti-Doping** who are also authorised for these purposes.

18. Championships

18.1. **Championship** or Series applications must be submitted to the **ASN** in accordance with **Ch.4.**

19. Grade of Events

19.1. **Clubs** will start by organising **Events** of **Clubman** grade and will only be allowed a higher grade after successful upgrading.

19.2. The regulations for **Grades** of **Event** and related **Permit** definitions together with upgrading requirements are set out in **App.8 to this Chapter.**

20. Fixture Lists

20.1. **App.9 to this Chapter** applies:

20.2. All **Events** at **Interclub** or higher status must be inscribed on the **ASN Calendar**.

20.3. **Events** at a lesser status than **Interclub** must be listed on a **Regional Association Calendar.**

21. Official Documents

21.1. All **Event**s are governed by the **Official Document**s **Regulations** set out in **App.10 to this Chapter**

22. Rights of Organisers

22.1. **Organisers** have the rights provided by **App.11 to this Chapter**.

23. Permission of National and Local Authorities

23.1. Prior to applying for any Permit the **Organiser**s must first obtain such official permission as may be necessary from the competent governmental or local authority in accordance with **App.2 to this Chapter.**

CHAPTER 3 ORGANISERS

Appendix 1 - Permit Application Regulations

1.1. Applications for **Permit** must be made on a form prescribed by the **ASN** not less than the following time before the **Event**:

a. **International** or **National** – 8 weeks.

b. **Interclub** – 6 weeks.

c. **Clubmans** – 4 weeks.

d. **Championships** – in accordance with details in **Ch.4.**

1.2. Failure to comply with above time limits **a., b.** or **c.** will render liability to a fee specified in **Ch.1 App.2** on the first occasion and increased fees for any subsequent breach.

1.3. Any application for **Permit** not made as prescribed may be refused or returned for resubmission as may any application from a **Club** which has failed to discharge any requirements or indebtedness to the **ASN** in respect of previous **Events.**

1.4. The **ASN** reserves full rights to add or modify any conditions attached to the **Permit** even after it has been granted and may decline to grant or may withdraw a **Permit**. Such decisions are not susceptible to **Appeal.**

1.5. **Events** of **Interclub** or higher **Permit** grade may not be authorised when a **Club** has not organised an **Event** of the same grade and type within the preceding two years unless upgraded in accordance with the specific regulations.

1.6. The scope of a **Permit** includes approval of the title of an **Event** (the titles Grand Prix, British, United Kingdom, UK etc. are reserved for **Events** or **Championships** organised by or for the **ASN**) and permission to televise or broadcast the **Event**.

1.7. No **Event** shall issue regulations without the prior approval of the **ASN** in writing. The issue of a **Permit** constitutes such approval.

CHAPTER 3 ORGANISERS

Appendix 2 - Permissions of National and Local Authorities

1.1. No **Permit** or **Certificate of Exemption** will be granted by the **ASN** unless the **Organisers** have first obtained such official permission as may be necessary from the competent governmental or local authority.

1.2. **Competitions** taking place on the **Public Highway** must conform with the laws of the country in which they take place. Any breach of such laws by a **Competitor** or **Driver** during a **Competition** shall be a breach of these **Regulations** and may be dealt with accordingly.

1.3. Any **Event** utilising the **Public Highway** in England Wales or Scotland is subject to the provisions of the **Motor Vehicles (Competitions and Trials) Regulations**

1.4. **The Road Traffic Act 1991** includes regulations which make dangerous or careless driving in a public place an offence. Section 13A of that act provides for the **Motor Vehicles (Off Road Events) Regulations 1995** and the issue of an **ASN Permit** exempts **Competitors** from the appropriate sections of the Act (Sections 1 and 2 and 3) whilst driving within the **Regulations** of the **Competition.**

1.5. All references to legislation shall be treated as references to the applicable current legislation from time to time and include such as may replace or substitute any of it.

1.6. **Clubs** organising **Events** using MoD property must contact the **MoD Liaison Officer** (‘**MLO’**) with the date and **Venue** during the planning stages of an **Event.**

1.7. The **MLO** must be consulted at least 3 months before an **Event** using MoD property and before contacting the MoD or its agents.

CHAPTER 3 ORGANISERS

Appendix 3 - Warning Notices

1. Warning Notices

1.1. The following notices should be prominently displayed as appropriate.

1.2. At any entrance to an **Event** or part of an **Event** on private ground – **Notice 'A'**.

1.3. (Ch.10 App.2 Art.2.1) Unless any **Enclosure** is surrounded by un-climbable fencing in the area between the enclosure and the course there shall be displayed at intervals **Notice 'B'** or notices stating that 'This area is Prohibited and the public are not permitted'.

1.4. At **Race Circuits** the following should be displayed:

a. at the entrance gate (if any) to the pits

b. in individual pits and

c. on the signaling wall opposite the pits.

'Warning the pits and **Pit Lane** are areas of potential danger and great care should be exercised at all times. Children under the age of 16 are not allowed in these areas'.

1.5. At any means of spectator or vehicular access to a **Rally Special Stage** – **Notice 'C'** together with a copy of **The Safety Code.**

1.6. In any area of particular danger on a **Special Stage** (i.e. escape roads etc.) – **Notice 'B'.**

1.7. Except where provided for in Arts.1.3 and 1.6 above the limits of spectator access may be defined by the display of Warning **Notice 'D'**.

1.8. These notices may be purchased from the **ASN** and should be visible at any other suitable points so that no person may be present at the **Event** without having them brought to their attention.

1.9. **Organisers** may also use a notice stating 'It is a condition of your presence that you will obey the instructions of **Marshals** in relation to the safety of yourself and others'.

1.10. Admission may not be obtained to any **Enclosure** whether or not there is a charge without a suitable pass and / or ticket (Ch.5)

1.11. The programme of the **Event**, all tickets, badges, tabards, labels (including car labels) and passes of admission whether for spectators or **Officials** shall bear or be accompanied by a copy of **Notice 'A'**.

1.12. Where the wording is printed on the reverse side of a ticket, armlet or lapel badge the words 'for conditions of admission see over' should appear on the face of the ticket, armlet or lapel badge.

2. SEE NOTICES BELOW:

2.1 NOTICE 'A'

2.2 NOTICE 'B'

2.2 NOTICE 'C'

2.3 NOTICE 'D'

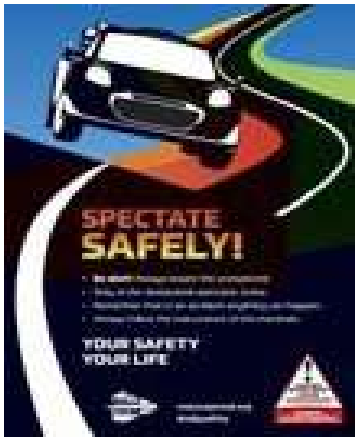

3. The Safety Code

Artwork is available to download on the Resource Centre on the **ASN** website.

CHAPTER 3 ORGANISERS

Appendix 4 - Participant Undertakings and Declarations (Ch.6)

1. Every Entrant, Driver and Passenger ('Competitor') before taking part in any Competition must sign an undertaking as follows:

'I declare that I have been given the opportunity to read the NCR and if any the Official Documents for this Event and agree to be bound by them. I declare that I am physically and mentally fit to take part in the Event and I am competent to do so. I acknowledge that I understand the nature and type of the Competition and the potential risk inherent with motor sport and agree to accept that risk.

'I understand that motorsport can be dangerous and accidents causing death, injury, disability and property damage can and do happen. I understand that these risks may give rise to my suffering personal injury or other loss and I acknowledge and accept these risks.

In consideration of the acceptance of this Entry I agree that neither any one of or any combination of the ASN and / or its associated Clubs, the Organisers, the Track owners or other occupiers, the promoters and their respective, officers, servants, representatives and agents (the "Parties") shall have any liability for loss or damage which may be sustained or incurred by me as a result of participation in the Event such as damage to property, economic loss, consequential loss, reputational loss or financial loss howsoever caused ('Losses'). Nothing in this clause is intended to or shall be deemed to exclude or limit liability for death or personal injury. To the fullest extent permitted by law I agree to hold harmless each of the Parties in respect of any Losses whatsoever and howsoever arising from my participation in the Event. Further I agree to accept responsibility for and where necessary compensate the Parties in respect of any Losses arising or howsoever caused by my negligence or actions where they are determined to be in breach of the Motorsport UK National Competition Rules as they apply to my participation in the Event."

'I declare that to the best of my belief the Driver(s) possess(es) the standard of competence necessary for an Event of the type to which this Entry relates and that the vehicle entered is suitable and roadworthy for the Event having regard to the course and the speeds which will be reached'

2. In the case of any Event taking place wholly or partly on publicly adopted roads:

'I declare that the use of the Vehicle hereby entered will be covered by insurance as required by the law which is valid for such part of this Event as shall take place on roads as defined by the law. I declare that the vehicle entered is registered taxed has a valid MOT certificate (where appropriate) and is roadworthy as required by law.'

3. State your age if you are under 18 . . .

3.1. If I am the Parent or Guardian of the **Driver**

'I understand that I shall have the right to be present during any procedure being carried out under the Supplementary Regulations issued for this Event and the NCR.

'I confirm that I have acquainted myself and the minor with the NCR agree to pay any appropriate charges and fees pursuant to those Regulations (to include any appendices thereto) and hereby agree to be bound by those Regulations and submit myself without reserve to the consequences resulting from those Regulations (and any subsequent alteration thereof). Further I agree to pay as liquidated damages any fines imposed upon me up to the maxima set out in **Ch.1 App.2.**

3.2. Where the Parent is not present there must be a Guardian signed on and who must produce a written and signed authorisation from the Parent/Guardian to act as their representative.

3.3. Every **Driver** taking part in a **Car, Truck** or **Kart Race**, **Speed Event** or **Special Stage Rally** shall sign a declaration in the following form:

'I understand that should I at the time of this Event be suffering from any disability whether permanent or

temporary which is likely to affect prejudicially my normal control of my vehicle I may not take part unless I have declared such disability to the ASN which has following such declaration issued a licence which permits me to do so.'

3.4. Every **Driver** taking part in **a Car, Truck** or **Kart Race** or other **Event** requiring that the **Driver** has passed a medical examination shall sign an undertaking in the following form:

'I undertake that at the time of the Event to which this Entry relates I shall have passed or am exempt from an ASN specified medical examination within the specified period.' (Ch.6 App.2 Art.6.5).

3.5. Every **Competitor** shall sign the following declaration:

'I have read and fully understood the regulations for Control of Drugs and Alcohol as contained in the NCR Ch.2 Art.2, Ch.5 App.11 Art.1.6, Ch.3 Art.17 and have also fully familiarised myself with the information on the web sites referred to (www.motorsportuk.org www.ukad.org.uk and www.wada-ama.org) in particular the UK Anti-Doping Rules which have been adopted by the ASN.

'Further if I am counter-signing as the Parent or Guardian of a minor then in addition to the deemed consent to the testing of that minor (UK Anti-Doping Rules in Ch.6) I hereby confirm that I give such consent for the minor concerned to be so tested.'

3.6. **Competitors** must respect that the **ASN** has the right to require alcohol and illicit drugs testing on any Person howsoever connected with any **Entry** operating within an **ASN Permitted Event** and shall at all times co- operate fully with the relevant procedures. These procedures are in addition to and not in substitution for any procedure undertaken by or at the instance of UK Anti-Doping.

3.7. Every **Competitor** shall sign the following declaration:

'I hereby agree to abide by the ASN Safeguarding Policy and Guidelines and the Code of Conduct.'

3.8. An **Entry** may be submitted by an agent on behalf of the **Entrant** but in that case the **Entrant** shall himself sign and submit an **Entry** form as soon as possible and in any case before the commencement of the **Competition.**

3.9. In the case of **Events** restricted to holders of **Competition Licences** issued by the **ASN** or **Events** listed on the FIA Calendar for **National Events** with **Authorised Foreign Participation** the indemnities specified above need not be printed on the **Entry** form but must be incorporated in the 'signing-on' documents.

3.10. For the purpose of completing an **Entry** form the **Entrant**'s signature may be either their signature in writing a facsimile of their signature where the **Entry** is made by facsimile or in the case of web based electronic submission of **Entry** (primarily by the use of an internet **Entry** form) the **Organiser** may accept that the **Entry** has been signed in accordance with **App.5 to this Chapter** if the **Entrant** has positively agreed to be bound by the **Regulations.**

CHAPTER 3 ORGANISERS

Appendix 5 - Entries to Events

Organisers Obligations Regarding Programmes Cancellation of Events

1. General

1.1. An **Organising Permit** having been granted the **Organisers** may invite receive and accept **Entries** from eligible **Competitors**.

1.2. Every **Entry** form sent out by the **Organisers** shall be accompanied by a copy of the relevant **Official Documents**.

1.3. Every **Entrant** and **Driver** shall complete and sign an **Entry** form and submit it to the **Organisers** by the appropriate date together with the **Entry Fee** (if any).

1.4. An **Entry** form which is incomplete in any material particular may be accepted by the **Organisers** conditionally upon a completed **Entry** form being received by a specified date.

1.5. An **Entry** not accompanied by the **Entry** fee prescribed in the regulations shall be null and void.

2. Entry by electronic means

2.1. An **Entry** may be made by electronic means of communication provided it is received before the time laid down for the closing of **Entries** together with the **Entry Fee** (if any).

3. Contents of Entry Form

3.1. **Entry** forms shall contain the following:

a. Title and date of the **Event** and identity of promoters/**Organisers.**

b. A statement in accordance with **App.10 to this Chapter**.

c. Spaces for the full true names and addresses of **Entrant**, **Driver**(s) and **Passenger**(s) and (if appropriate to the **Event**) the licence number of the **Entrant Driver**(s) and **Passenger**(s). **Official Documents** may permit the nomination of **Driver**s and **Passenger**s to be deferred but no **Driver** or **Passenger** shall compete before having first signed the appropriate indemnity declaration(s) and/or undertaking(s) as required by **App.4 to this Chapter**.

d. The forms of indemnity declaration and undertaking as appropriate in accordance with **App.4** and spaces for the appropriate signatures. N.B. If all **Competitors** in the **Event** hold **ASN** licences **App.4 Art.9** applies.

e. Any other information required by the **Official Documents** to be stated on the form (e.g. details of a **Vehicle** or details of the **Competitor**'s club).

f. For all **Events** using the **Public Highway** the **Entrant** will also be required to supply the name and address of the **Vehicle's** insurers.

g. Space for the name and address of a relative or friend to be informed in the case of a serious accident.

h. A statement that any indemnity and/or declaration as prescribed and which is signed by a person who has not reached his 18th birthday shall be countersigned by that person's parent or guardian whose full names and address shall be given. An **Entry** may be made by other electronic means of communication and must be made by the parent or guardian whose full names and address must be given.

4. Acceptance of Entries

4.1. If the number of Entries received exceeds the maximum number of **Competitors** laid down in the **Official Documents** those to be accepted shall be selected in the manner specified therein.

4.2. If no method is specified selection shall be at the discretion of the **Organisers** whose decision shall be final subject to any right of **Appeal.**

4.3. A representative of any sponsor or promoter of an **Event Championship** or Series may not take an active part in the organisation of the competitive or technical side of that **Event** if any **Competitor** in the **Event** is entered or sponsored by the individual or firm concerned.

5. Nomination of Reserves

5.1. Should any **Competitor** be rejected that person may be nominated as a reserve.

5.2. The number of reserves may not exceed 30% of the number of starters permitted.

6. Acknowledgement of Entries

6.1. **Organisers** shall acknowledge **Entries** within seven days of receipt and at the same time notify **Entrants** whether their **Entry** is accepted refused or a decision deferred.

7. Multiple Entries of a Vehicle

7.1. A **Vehicle** shall not be entered more than once in the same **Competition** unless two entries for the same **Vehicle** are permitted in the **Official Documents**.

7.2. In such a case the responsibility of the **Entry** shall be shared jointly by both **Entrants** and the **Vehicle** shall only compete once with the same **Driver**.

8. Ineligible Entries

8.1. It is strongly recommended that no **Organiser** shall accept an **Entry** from any **Competitor** who is closely related to, employed by or employs one of the **Senior Officials** of the **Event**.

9. Entry containing a false or incorrect statement

9.1. An **Entry** which contains a false or incorrect statement shall be null and void and the **Entrant** may be deemed guilty of a breach of the **NCR** and the **Entry** fee may be forfeited.

10. Closing of Entries

10.1. The date specified in the **Official Documents** for the closing of **Entries** shall be in the case of **International Events** not less than seven days before the date of the **Event**. For all other **Events** it shall not be less than three days before the date of the **Event**.

10.2. Exceptionally for **Clubmans Events** specified in **App.8 Art.3.1 of this chapter** and for **Clubman Rallies, Trials, Autotests, AutoSOLOs, Kart** or **Cross Country Events** the **Official Documents** may permit entries to be accepted up to one hour before the **Competition** starts.

11. Entry

11.1. An **Entry** made and accepted in accordance with the **NCR** and any relevant **Official Documents** is a contract between a **Competitor** and the **Organisers** by which the **Competitor** agrees to take part in the **Competition** for which they have Entered unless prevented by force majeure and the **Organisers** agree to comply with the conditions of **Entry** provided that the **Competitor** has made every effort to take part in the **Competition**.

11.2. A breach of this contract may be treated as a breach of the **NCR**.

12. Programmes and Content

12.1. If a programme is published it shall contain the following information as relevant:

a. A statement in accordance with **App.10 Art.2.1 to this Chapter**.

b. A copy of the warning notice as detailed in App.3 Art.1.11 .

c. The name of the **Organising Club.**

d. Place and date of the **Event**.

e. A short description and the timetable of the proposed **Event**.

f. The names of the **Stewards of the Event** (indicating any appointed by the **ASN**) and the **Clerk of the Course** and **Event Secretary** and **Senior Officials**

g. A detailed list of the prizes assigned to each **Competition**

h. Names of the **Entrants** and **Driver**s with their allocated numbers and the name of the invited **Club** of which the **Competitor** is a member.

12.2. It is recommended that provision is also made for a 'sponsor's' name to be included.

12.3. The **Organisers** shall not include the name of a person from whom an **Entry** has not been accepted.

13. Postponement / Abandonment / Cancellation of an Event

13.1. An **Event** shall not be postponed or abandoned or cancelled unless provision for so doing is made in the **Official Documents**, or the **Steward**s of the **Event** have taken action in accordance with their authority.

13.2. In the event of cancellation or postponement for more than 24 hours **Entry Fees** must be returned in full unless the **Official Documents** have provided for a specified amount to be retained for administrative expenses.

13.3. Postponement shall be subject to approval by the **ASN** of the proposed new date.

14. Payment of Starting and Prize Money / Presentation of Awards

14.1. The distribution of prizes must not commence until half-an-hour has elapsed after the publication of the **Provisional Results** of a **Competition.**

14.2. The rewards offered in **Events** may be limited and will only be presented to any **Competitor** who has produced all the documentation necessary to prove eligibility for the **Event**.

14.3. No starting or appearance money shall be paid at **Events** below **National Status.**

15. Official List of Competitors

15.1. The **Organisers** should place an official list of entries at the disposal of the **Stewards, Senior Officials** and **Competitors** not less than 48 hours before the commencement of the **Event**.

15.2. Exceptionally when the **Official Documents** permit entries to be accepted up to one hour before the **Event** this list must be exhibited on an official notice-board prior to the start of the **Event**.

CHAPTER 3 ORGANISERS

Appendix 6 - Publication of Results

1.1. Detailed Provisional Results in writing must be made available for inspection by any Competitor as follows:

a. **Race** and **Speed Events** – within two hours of the end of each **Race** or the conclusion of a **Speed Competition** or per **c.** and **d.** below where applicable.

b. **Non-Speed Events** – within two hours of the last **Vehicle** finishing the **Competition** or per **c.** and **d.** below where applicable.

c. Within seven days of the finish of the **Competition** by post to each **Entrant** at the address given on his **Entry** form or by electronic communication where the address is disclosed.

d. Where through force of circumstances it proves impractical to produce the results within two hours of the finish then **c.** above will apply notwithstanding any statement to the contrary in **Official Documents**.

1.2. Once results are **Final** they may not be changed subject only to the powers held by the ASN or in the event of Judicial action resulting from an exceptional extension of **Protest** or **Appeal** time limits or the **Results** are affected by the outcome of a subsequent **Right of Review** procedure.

1.3. The date and time of issue of all **Provisional** and **Final Results** should be stated on them and they should be signed by the **Clerk of the Course** or their **Deputy.**

1.4. These results become **Final** when any **Protest** or **Appeal** time has expired and all official enquiries by the **Clerk of the Course** and / or **Race Director** and all technical matters and all outstanding **Protests** or **Appeals** have been settled unless otherwise directed by the **ASN.**

1.5. Within such period as the **ASN** may prescribe the following information must be sent to the **ASN** by the **ASN Steward** where appointed otherwise by the **Organisers** after the **Event** within 14 days:

a. A programme (if any) or list of starters including each starter's **Competition Licence** number (when appropriate) and a copy of any **Official Instructions**, **Route Book(s), Route Card(s)** and any other **Official Documents** (**App.10 to this Chapter**).

b. A copy of the **Results** (provisional or final as the case may be).

c. A résumé of all **Judicial** proceedings and any penalties imposed.

d. A report of the **Stewards of the Event** (this report is not essential if an **ASN Steward** has been appointed and need only be as brief as is applicable). If hearing an **Appeal** delays finalisation of **Results** then a final **Steward's Report** and a copy of the results must be submitted to the **ASN** when the **Stewards** have announced their **Decision.**

e. A schedule of all **Fees** and **Fines** payable to the **ASN**.

f. If appropriate details required by **Standard Condition 17 of the Motor Vehicles (Competitions and Trials) Regulations.**

CHAPTER 3 ORGANISERS

Appendix 7 - Certificates of Exemption

1.1. **Clubs** organising **Events** of the type specified below may be granted a **Certificate of Exemption** providing application is made to the **ASN** not less than four weeks prior to any announcement of the **Event**.

1.2. A **Certificate of Exemption** indicates that there is no right of **Appeal** to the **ASN National Court** and that provided the **ASN** has granted specific approval members of unrecognised **Clubs** or members of the public may participate but not officiate at such **Events**.

1.3. Any of the following **Events** which are run commercially for profit will be levied a facility fee in accordance with **Ch.1 App.2** at the discretion of the **ASN**.

a. A **Touring Assembly** as defined in **Ch.1 App.1** and in which there is no individual timing except for the purpose of preventing **Competitors** travelling too fast or too slow.

b. A **Gymkhana** held entirely on private ground.

c. A **Treasure Hunt** run in accordance with **Ch.13.**

d. A procession for charitable or historic purposes.

e. A Concours d'Elegance.

f. A Road Safety **Event** run in accordance with **Ch.13.**

g. An approved **Driver's Training day** or **Special Demonstration** for non-speed **Events**. A charge may be made by the **ASN** for such **Events**.

h. A **Cross Country Promotional Event** in accordance with **Ch.20.**

i. An **Economy Rally** held in accordance with **Ch.13.**

1.4. An **Event** complying with **Art.1.3.b., c.** or **h.** above and organised for **Cross Country Vehicles** may not be considered suitable for the normal insurance arrangements for this type of **Event** and will be charged a normal per capita insurance and **Permit** fee. Such **Events** must be clearly identified on application.

1.5. Following the **Event** copies of all published documents issued for the **Event** must be sent to the **ASN**.

1.6. The following special **Events** may qualify for a **Certificate of Exemption** and will be charged a facility fee in accordance with **Ch.1 App.2** at the discretion of the **ASN**:

a. Rallysprints.

b. Any other **Event** not provided for in the **NCR** which the **ASN** deem to be appropriate.

CHAPTER 3 ORGANISERS

Appendix 8 - Grade of Events

1.1. The following **Permit Grade** definitions apply:

a. **Clubman**

Events confined to members of the organising club and not more than fifteen invited **Clubs**. **Clubman Events** may not form part of any **Championship** other than a **Championship** restricted to the **Organising Club.** Additional regulations applying to certain **Clubman Events** are detailed below.

b. **Interclub**

Events confined to registered members of the Organising Club of other invited **Clubs** Associations or Groups or (in certain special circumstances) persons having some other particular qualification which shall be agreed in advance by the **ASN**.

i. Organising **Clubs** may invite:

45 **Clubs** provided that the names of those **Clubs** are published in the **Official Documents** or any number of **Registered Championships** and 4 **Regional Associations** and / or **Recognised Groups.**

c. **National Events** open to any holder of a valid **Competition** licence issued by or acceptable to the **ASN**

d. **International Events** open to any holder of a valid International **Competition** licence issued by an **ASN**. (Ch.1 Art.1.12).

1.2. An **Interclub** or **National Event** (non-**Race**) may be a part of any number of **Championships**. All **Competitors** in those **Championships** where appropriate must be registered and produce evidence of **Championship** registration when requested. In all cases the **Championship(s)** must have been registered with or exempted by the **ASN** and that registration number must be shown in the **Official Documents**.

1.3. In an **Interclub** or **Clubmans Event** only registered members of such **Clubs** which have specifically been invited and are listed in the regulations for the **Event** shall be eligible to compete.

1.4. If a **Club** wishes to extend an invitation to all other **Clubs** in a **Regional Association** or **Recognised Group** it must first obtain that **Association** or **Group's** authorisation.

1.5. **Clubmans** and **Interclub** and **National Events** may invite foreign participation subject to the **Event** being entered on the **National Calendar.**

1.6. A British **Championship** may be designated **National (Open)**. All **Competitors** in those **Championships** will be required to hold an **International** status **Competition Licence**.

2. Upgrading Requirements

2.1. A **Club** requiring an **Event** to be upgraded for the following year must apply to the **ASN** at least eight weeks before the **Event** so that an **Observer** may be appointed. A fee may be charged for their attendance.

2.2. In addition to satisfactory reports from the appointed **ASN Stewards** or **Observers** certain minimum requirements must have been attained before applications for upgrading or to **British Championship** status will be considered. These are detailed under the appropriate **Regulations.**

2.3. Additional requirements or changes of date may be specified by the **ASN** before acceptance.

3. Clubman Permits

3.1. **Clubman Permits** for the following types of **Event** must comply with **Arts.3.2 - 3.6.**

a. **12 Car Rallies.**

b. **Navigational Scatters.**

c. **Sporting Trials.**

d. **Car Trials.**

e. **AutoSOLO.**

f. **Autotests.**

g. **Production Car Autotests.**

h. **Cross Country Trials (Untimed).**

i. **Cross Country Tyro Trials.**

j. A **Veteran Car Rally** (or **Run**) (**Ch.13**).

k. **Classic Reliability Trials.**

l. **Navigation Rallies** limited to **20 Vehicles** not being part of a **Championship** other than that of a **Regional Association.**

3.2. **Application** must be made to the **ASN** not less than four weeks prior to the **Event**.

3.3. **Application**s to the **ASN** do not need to be accompanied by a copy of the **Official Documents** for the **Event. Official Documents** must however be prepared in accordance with the relevant parts of **App. 10 to this Chapter** and made available to all **Competitors** before the start of the **Event** and if requested to the **ASN**.

3.4. **Events** listed above at **Art.3.1.a.** may form part of a **Closed to Club Championship**. **Events** listed above at **Art.3.1.b.** to **l.** may form part of a **Regional Association Championship** or a **Closed to Club Championship** as defined in **Ch.4.**

3.5. Unless there has been any incident involving loss or damage to persons or property in which case full details must be submitted to the **ASN** the only documentation required after the **Event** is the completed **Permit** form and the correct **Fee.**

3.6. **Clubs** may organise **Events** prescribed in **Art.3.1 above** as "**Taster Events**" where provided the **ASN** has granted specific approval members of unrecognised clubs or members of the public may participate but not officiate and will be deemed to be a member of the **Organising Club** for the day on completion of an application form for an **ASN RS Clubmans Competition Licence.**

CHAPTER 3 ORGANISERS

Appendix 9 - Fixture Lists

1.1. To have an **Event** entered on the **ASN Calendar** a **Club** must:

a. Apply before a date to be specified annually or

b. If after this specified date must apply a minimum of two clear calendar months before the month in which the **Event** is proposed.

c. If an already notified date is to be changed for any reason apply as **b. above.**

1.2. **Application**s made under **Art.1.1.b.** and **c. above** may be subject to a **Fee** detailed in **Ch.1 App.2** **Ch.1 App.2** (except in the case of recently **Registered Clubs**) and will be advised by means of an official announcement and with the exception of **Rallies** requiring a **CAO Authorisation** may be subject to objection from **Regional Associations** or **Clubs** whose dates for a similar type of **Event** have already been listed. Such objection must be made within one month of the date of publication.

1.3. The **Organisers** of any **Event** inscribed on the **ASN** or **Regional Association Calendar** which is cancelled may be liable for a **Fee** as detailed in **Ch.1 App.2**

1.4. All **International Events** must be inscribed on the **International Sporting Calendar** as prescribed by the **FIA.** Separate fees are payable to the **FIA** in respect of inscription. Information as to the procedure can be obtained from the **ASN**.

1.5. All **Competitions** (including **Training Events**) must be run in accordance with these **NCR** unless specific exemption is given before a **Permit** is granted.

CHAPTER 3 ORGANISERS

Appendix 10 - Official Documents

1. All Events are governed by the following Regulations and which have the status of Official Documents.

a. The **NCR** of the **ASN**.

b. The **Sporting** and **Technical Regulations** of any applicable **Championship** or **Series** and any **Supplementary Regulations** published prior to the acceptance of **Entries** by the **Club** organising the **Event** ('the **Organisers**'). Any such **Regulations** not in conformity with the **NCR** shall be null and void subject to **Ch.1 Art.1.4.**

c. Any **Official Instructions** which may be issued in writing by the **Organisers** to **Competitors** to deal with particular points arising after the issue of **Regulations** at **b. above** but if and so far as such instructions are contrary to those **Regulations** (except as in **Art.4**) or the **NCR** they shall be null and void.

These documents will be jointly referred to as **The Regulations of the Event**. (**The Regulations**.)

2. Announcement to be made on all Official Documents

2.1. All **Supplementary Regulations (SRs), Programmes** and **Entry** Forms relating to any **Event** shall bear in a conspicuous manner the following announcement:

'Held under the National Competition Rules of Motorsport UK (incorporating the provisions of the International Sporting Code of the FIA) and these Supplementary Regulations.'

3. Contents of Event Supplementary Regulations

3.1. The **Event SRs** must contain the following information as relevant:

a. The names of the **Organising Club** and the **Promoters.**

b. The name date place and nature of the proposed **Event**(s).

c. A statement in accordance with **Art.2 above**.

d. The **Permit Number** and grade of **Permit**(s) issued by the **ASN**. In the case of dual **Permit Events** details of what grade of **Licence** is required for each **Event** / **Race.**

e. Details of **Eligible Competitors**.

f. Details of any **Championships** incorporated in the **Event.**

g. The dates times and places fixed for the official **Scrutineering** of **Vehicles.**

h. The dates times and nature of starts with details of any handicapping.

i. A brief description of the proposed **Event(s)** including length of the course and the categories of **Vehicle** eligible.

j. The relative positions of the **Vehicles** at the start and how they are to be determined.

k. Requirements for **Practice.**

l. Particulars of the identification numbers and marks to be carried on **Vehicles.**

m. Provisions in regard to **Vehicles** in the pits area.

n. The facts to be judged by the **Judges of Fact** and **Driving Standards Observers**.

o. If television coverage is expected **Competitors** must be advised that restrictions on advertising will be imposed.

p. A detailed list of prizes allocated to each **Event**.

q. The maximum and minimum number of **Competitors** and how entries are to be selected for acceptance if in excess of the maximum.

r. Any provision to amalgamate classes.

s. The dates of opening and closing of entries and where they shall be sent.

t. The amount of the **Entry** fee and provisions for the refund of **Entry** fees.

u. Conditions in which **Entries** may be refused .

v. Any additional information required on **Entry** forms.

w. Whether the nomination of **Drivers** may be delayed and whether there is any provision to change nominated **Drivers.**

x. Provisions regarding postponement, abandonment or cancellation.

y. The names of the **Stewards of the Event**, the **Clerk of the Course**, **Event Secretary**, **Chief Scrutineer** and **Chief Timekeeper.**

z. When and where **Provisional Results** will be published.

aa. How the results will be determined and prizes awarded.

ab. A reminder of the **Regulations** concerning **Protests** and **Appeals (Ch.2).**

ac. In addition to any **Parc Fermé** required by these **Regulations Organisers** may at their discretion specify as many **Parc Fermé** as may be deemed by them to be necessary for the proper conduct of the **Event**.

ad. All such other requirements and information as shall from time to time be specified in or pursuant to the **NCR** or the **Permit Application Form** or as may be necessary for the proper conduct of the **Event.**

4. Alteration of Supplementary Regulations

4.1. Subject to **Ch.1 Art.1.4** no alteration or addition may be made to the **Supplementary Regulations** after the commencement of the period for receiving entries unless:

a. The **ASN** and all **Competitors** already entered agree in writing to the alteration or

b. The **Stewards of the Event** so decide for reasons of safety or **Force Majeure** or

c. Subject to the agreement of the **ASN** amendments restricted to the safe and orderly conduct of the **Event** may be made by the **Organiser** until the beginning of the **Event**.

4.2. Where a **Championship Permit** has been issued unless the **ASN** has exercised its authority under **Ch.1 Art.1.4** the **Championship Sporting** and **Technical Regulations** may not be amended after publication unless **ASN** and all **Competitors** registered for the **Championship** agree in writing to the alteration. All amendments must be circulated to all **Registered Competitors**, **Championship Stewards, Eligibility Scrutineer, Clubs** organising **Rounds** of the **Championship** and to the **ASN**.

4.3. **Championships** exempt from registering with the **ASN** do not need to comply with **Art.4.2 above.**

CHAPTER 3 ORGANISERS

Appendix 11 - Rights of Organisers

1.1. The **Organisers** may at their discretion:

a. Delete part of the course or **Event** or ignore part of the records of the **Event** in the case of bona fide unforeseen circumstances.

b. Distribute the awards based on intermediate results if through bona fide unforeseen circumstances the **Competition** is stopped before its scheduled completion.

c. Offer additional awards.

d. Change the order in which **Competitions** are run at an **Event** which includes more than one **Competition** or **Event** with the prior consent of the **Stewards of the Event**.

e. Forbid the participation of or otherwise penalise any **Driver** or **Vehicle** appearing on examination to be ineligible for the **Competition** or a **Class** therein to which the **Entry** refers.

f. Offer before the start of the **Competition** the **Entrant** of any **Driver** or **Vehicle** liable to **Disqualification** under **Art.1.1.e. above** the option of transfer to an appropriate **Class** or **Competition** if such appropriate **Class** or **Competition** is scheduled at the **Event**. Such offer shall be without prejudice to the imposition of other penalties.

g. Disqualify any **Vehicle** or **Competitor** whose appearance condition or performance is not of a standard appropriate to the **Event**.

h. Check the eligibility of any **Vehicle** and / or **Competitor** before during or after the **Competition** provided that intention to do so after the **Competition** is notified to the **Competitor** concerned within half an hour of the publication of the **Provisional Results**. If necessary the **Vehicle** or components thereof may be sealed for subsequent inspection.

i. Require a **Vehicle** to be dismantled by the **Entrant** to check its eligibility or suitability as and when directed.

j. Require such components and / or samples as may be specified to be produced by the **Entrant** as and when directed.

k. Require the **Entrant** to defray any costs arising from the exercise of the rights given by **Art.1.1.h. to j. above** subject to any ruling as to costs made by the **Clerk of the Course** or the **Stewards of the Event** should the dismantling result from a **Protest** **(Ch.2)**

l. **Permit** a change of **Vehicle** or **Driver**(s) from those nominated in the **Official Programme** of the **Event** on written application being made by the **Entrant** not less than half an hour before the start of **Practice** or **Competition** (where there is no **Practice**) and provided that:

   i. A change of only one or the other and not both is permitted unless all the **Entrant**s and **Driver**s agree in writing to such a change of both and;

   ii. No change of **Vehicle** is permitted which would prevent the participation in the **Event** of a reserve **Entry.**

m. Exceptionally in **Hill Climbs** and **Sprints** such permission may be given after the conclusion of **Practice** but before the start of competitive runs or in the case of **Circuit Racing** after **Qualifying Practice** but before the start of the **Race** and are to be started from the back of grid ahead of those with a 10 second delay subject to the **Vehicle** having completed 3 **Practice** laps.

n. Disqualify at any time during an **Event** any **Licence Holder** or other **Person** connected with the **Entrant** considered as possibly unfit by reason of health consumption of alcohol or prohibited substances and with the exception of road sections of **Rallies** or **Trials** disqualify any **Competitor** found smoking and / or using electronic alternatives whilst participating in the **Competition.**

o. Disqualify any person convicted at Law of an offence committed during the **Event** and report such

person to the **ASN**.

p. Reject any claim for expenses arising from the **Event** incurred by any person either taking part in the **Event** or assisting a **Competitor**.

q. Specify the way a tie shall be resolved should the provisions of the **Regulations** not produce a result.

1.2. Specify within any of the **Regulations** or other official communications relating to an **Event** or within **Championship Regulations** for an **Event** the following:

a. The number and location of any **Parc Fermé.**

b. The instructions for the placement and retention of **Vehicles** in **Parc Fermé.**

c. Specific conditions attaching to **Parc Fermé** and to the **Vehicles** placed therein including:

i. The carrying out of any works on the **Vehicles** in **Parc Fermé**

ii. The addition or removal or examination of any parts or fluids on or in the **Vehicles.**

iii. The examination interrogation or downloading of any data retained or stored by or within any medium currently known or existing in the future.

iv. The persons permitted to enter and / or to remain in **Parc Fermé** and any conditions attaching to such persons.

v. The extent to which any **Parc Fermé** shall be a secure area.

vi. If applicable the route to **Parc Fermé.**

Chapter 4

Championships

CHAPTER 4 - CHAMPIONSHIPS

1. General

This Chapter is separated into the following appendices:

App. 1 **Championship Officials**.

App. 2 Conditions applying to all **Car** and **Truck Race**, **Kart Race** and **Speed Event Championship Permits**.

App. 3 **Car** and **Truck Race Championships**.

App. 4 **Stage Rally Championships**.

App. 5 **Speed Event Championships**.

App. 6 **Kart Racing Championships**.

1.1. The Appendices to this Chapter comprise the **Regulations** applicable to the **Application** to the **ASN** for **Championship Permits** and **Series Registrations**.

1.2. A **Championship** is defined in Ch.1 App.1 as:

"an **Event** or **Series** of **Events** organised for the purpose of establishing the right to an individual or collective title. Such a **Competition** may also be referred to by other titles e.g. Challenge, Trophy or Cup".

Within the context of this Chapter and the **NCR** as a whole all are referred to as "**Championship**".

1.3. A **Series** is defined as:

"a **Series** of individual **Events** organised to a common set of Sporting and or **Technical Regulations** with no accumulative overall or **Class** winner(s) or title award".

1.4. The **ASN** may designate as "Commercial" any **Championship** which it considers as being publicity oriented.

1.5. A **Competitor** shall not take time off school to participate in motor sport without the prior written approval of their school.

1.6. There are 4 grades of **Championship** as provided at Art.2 below

1.7. The Conditions for the issue all **Championship Permit**s other than **Race**, **Kart** and **Speed** are mandated in **Chapters 3**, **5** and **21**.

1.8. A Championship or Series application must be submitted to the ASN by the Registered Club and / or coordinating organisation on the prescribed ASN form and must be issued with a Championship Permit or Series Registration before entries are accepted. These entities shall be jointly or severally known as 'Championship Organisers'.
The Championship Organisers are solely responsible for ensuring that they are not infringing any third party intellectual property rights. When making an application, the Championship Organiser must confirm that they have addressed any and all issues relating to third party IP rights. Any IP issues that subsequently arise may result in the withdrawal of any Championship Permit with immediate effect. Notwithstanding the above, the ASN shall not be responsible for any IP infringement by a Championship Organiser.

1.9. A **Permit** and/or facility fee may be charged for such approval.

1.10. The **ASN** reserves the right to charge a **Promoter's Permit** fee.

1.11. The organisation and control of a **Championship** or **Series** shall always rest with the relevant **Permit** holder subject to these **Regulations.**

1.12. **Championship**s for **Autotests**, any form of un-timed **Trial, Navigational Rallies**, **12 Car Rallies, Scatters** and **Internal Club Challenges** (unspecified **Events** on unspecified dates) which are confined to bona fide members of the **Organising Club** are exempt from registering with the **ASN**. These **Championship**s do not need to comply with Art.1.19 below.

1.13. The right to a **Championship** or **Series** title resides with the body who originally registered that **Championship** or **Series**. Where a **Championship** or **Series** was originally proposed by a commercial body that body shall have the right to nominate or change the **Organisers** of that **Championship** or **Series** subject to the terms of their contract.

1.14. For the purposes of any dispute resolution the contract referred to at Art.1.13 above shall be disclosed to the **ASN** on demand but may be redacted as to the money value terms (if any) contained in it.

1.15. The **ASN** alone shall be entitled to authorise the broadcasting, transmission, audio/visual recording and moving picture rights of any **ASN Championship Event**. Prior to any such **Event** the Organising Club will arrange for the consent of the landowner to be given in order that the **ASN** may authorise such broadcasting, transmission or audio/visual recordings to take place. For all **Events** held on the public forest estates managed by Natural Resources Wales Forestry and Land Scotland and Forestry England special arrangements exist with the **ASN**. Further details of these arrangements are available from the **ASN**.

1.16. To accrue points or any other form of recognition towards an award or title any team sponsor person or other entity must be in possession of a valid **Entrant's Licence.**

1.17. The registration of a **Championship** or **Series** for a specific class of vehicle does not give the **Organiser** the right to prevent other **Championships** or **Series** for that class of **Vehicle** (subject to the authority of the **ASN**).

1.18. **Championship** or **Series Organisers** may specify in their **Official Documents** procedures for the gathering of on-board data logging information.

1.19. Subject to the **ASN** rights at Ch.1 Art.1.4 when a **Championship Permit** has been issued **Championship Sporting and Technical Regulations** may not be amended after publication unless the **ASN** and all **Competitors** registered for the **Championship** agree in writing to the alteration. Such amendments must be circulated to all **Registered Competitors**, **Championship Stewards, Eligibility Scrutineer**(s), **Clubs Organising Rounds** of the **Championship** and to the **ASN**.

2. Championship Grades

2.1. There are four grades of **Championship** recognised by the **ASN**. Relevant fees are contained within Ch.1 App.2.

a. British **Championships** approved by the **ASN**

b. Principal **Commercial Championships**

c. Sponsored (and/or **Commercial**) **Championships**

d. Unsponsored (non-**Commercial**) **Championships.**

3. Junior Car Racing

3.1. Specific **Regulations** for **Junior Car Racing** are provided in Ch.12**.**

4. International European British and National Championships

4.1. **Championships** bearing the title **International, European, British, National** or other titles which mean to convey the same impression are normally reserved for **Championship**s promoted by or on behalf of the **ASN**. Organisations wishing to make application for such a **Championship** or to be associated with such a title must first seek separate approval from the **ASN** prior to application for a **Permit**. If at any time the **ASN** shall refuse or withdraw a **Championship Permit** then any prior approval under this **Regulation** to use such or any other title as referred to above shall immediately terminate.

4.2. **Championships** bearing the title **British** and including one or more qualifying rounds of **International** status **Events** where those rounds are also rounds of an **FIA Championship** must submit their calendars by 31st May in the preceding calendar year for approval by the **ASN**. **Championship**s bearing the title **British** and comprising **International Events** not being rounds of an **FIA Championship** and/or national **Events** must submit their calendars by 31st August in the preceding calendar year for approval by the **ASN**.

CHAPTER 4 CHAMPIONSHIPS

Appendix 1 - Championship Officials

1.1. The following **Championship** Officials must be nominated on the **Championship Application Form** by the **Organiser**s and there may be no duplication of duties:

i. A **Championship Co-ordinator** (except for **Speed Events**)
ii. **Championship Stewards** (minimum three) and
iii. an **Eligibility Scrutineer**

a. None of the above may be **Competitors** in the **Championship** or prepare **Vehicles** for **Competition** in the **Championship** or be sponsors of **Competitors** in the **Championship** nor directly or indirectly through another legal person prepare **Vehicles** for **Competitors** in the **Championship** or be sponsors of **Competitors** in the **Championship –** see also **Art.1.16 below.**

1.2. The **Championship Stewards** can only adjudicate upon any disputes irregularities or appeals arising from the published **Championship Regulations.** They are also empowered to consider any request from the **Championship Co-ordinator** to penalise any **Competitor** for breach of **Championship Regulations** and after holding a formal hearing those **Stewards** may impose a penalty in accordance with **Ch.2** subject to the rights of **Appeal** to the **National Court** there provided.

1.3. The **Championship Co-ordinator** is responsible for liaison with the **Championship Stewards** and between the **Championship Organiser**, the **Event Organisers**, **Competitors** and any **Championship Officials** and for the distribution of relevant information.

1.4. The **Co-ordinator** when present at **Events** must sign on and should remain present at the **Venue** until the **Event** has concluded.

1.5. The **Co-ordinator** cannot impose any penalties or sanctions on a **Competitor** but may request the **Stewards** to hold a hearing into any alleged breach of **Regulations**.

1.6. The **Co-ordinator** does not have the power to make decisions on **Sporting** or **Technical Regulations** applicable to the **Championship** nor to issue **Bulletins, Newsletters** or **Results** without the approval of the **Championship Organiser**.

1.7. Other than the **Clerk of the Course** and the **Championship Stewards** no other person may exercise and **Judicial** powers or responsibilities within published **Championship Regulations.**

1.8. The **Eligibility Scrutineer** must be **ASN Licensed** and specifically approved by the **ASN** and the **ASN Technical Commission** for this purpose.

1.9. Any **Championship** with a **Class** or **Classes** exclusively for **Period Defined Vehicles** as defined by these **NCR** must appoint a **Historic Grade Eligibility Scrutineer**.

1.10. The **Eligibility Scrutineer** must when present at **Events** sign on and should remain at the **Circuit** until the **Event** has concluded.

1.11. Any eligibility checks on **Vehicles** must be carried out in full co-operation with the **Club** organising the **Event**.

1.12. Any eligibility decision of an **Eligibility Scrutineer** will not be a **Judgement of Fact** unless the decision is made in conjunction with a **Technical Commissioner** or the **Chief Scrutineer** of the **Event.**

1.13. The **Clerk of the Course** must be informed of the intention to carry out and the results of all eligibility checks.

1.14. Where **Championships** require the appointment of a **Technical Commissioner** to enforce eligibility standards written application must be made to the **ASN**. Justification is required and a charge will be made for this facility in addition to the **Permit fee**.

1.15. All expenses of a **Technical Commissioner** are the responsibility of the **Championship Organiser** and must be agreed in writing between the **Technical Commissioner** and the **Championship Organiser**.

1.16. A representative of any sponsor or promoter of an **Event** or **Championship** may not take an active part in the organisation of the competitive or technical side of that **Event** if any **Competitor** in the **Event** is entered or sponsored by the individual or sponsor or promoter concerned or if any competing **Vehicle** is prepared by such a person or connected entity.

1.17. To be eligible to be named a permanent **Clerk of the Course** for a **Race Championship** that **Clerk** must be the holder of a current **Clerk of the Course National Licence** as a minimum.

CHAPTER 4 CHAMPIONSHIPS

Appendix 2 - Conditions applying to all Car and Truck Race, Kart Race and Speed Event Championship Permits

1.1. Written agreement must be held by the **Championship Organisers** from all **Clubs** organising a qualifying round and from the owners of **Licensed Tracks** to be used.

1.2. The **Sporting and Technical Regulations** for all **Championships** must be produced to the standard format required by the **ASN** and must be submitted with the **Championship** application.

1.3. All applications for one-make **Race Championship** other than any **Championship** for **Vehicles** with **Governmental Type Approval** must include full and detailed chassis/bodywork drawings and specifications.

1.4. Advance publicity may only be issued prior to the granting of a **Permit** for a new **Championship** following the granting of outline approval and with **ASN** prior written approval of that publicity.

1.5. A **Championship** must at all times be referred to by its correct **ASN** approved or outline approved title and the **Permit** number must be included in all published **Championship Regulations.**

1.6. **FIA** approval may be required for **Championship** rounds going outside the UK (except for the Republic of Ireland) such approval is to be managed through the **ASN**.

1.7. The **ASN** reserves the right to impose conditions on the status dates and promotion of **Championships** and information must be supplied on the following before a **Permit** is issued:

a. The proposed title

b. The value of the awards, including bonuses

c. The method of scoring

d. The method of resolving ties

e. The eligibility of **Competitors** and **Vehicles**

f. The status dates promoting **Clubs Tracks** or **Courses** for the qualifying **Rounds**

g. Whether or not the **Championship** has been run in the past

h. The number of **Competitors** in the past.

1.8. All **Championships** approved by the **ASN** must comply with **Permit** and application requirements as detailed. Competitors should ensure that their cars comply with the Motorsport UK Approved Formula Regulations for the class or the specific Championship Technical Regulations.

1.9. A copy of the approved **Championship Permit** and **Regulations** must be lodged with all **Clubs** organising qualifying **Rounds.**

1.10. An **Organiser** granted a **Championship Permit** takes responsibility for controlling all sporting, technical, financial and calendar matters and must provide and guarantee all prize money, awards and bonuses as stated on the application. Failure by an **Organiser** to comply with all **Championship Regulations** could render cancellation of the **Championship** and could affect future applications.

1.11. **Championship Points** may only be issued by the **Championship Permit Holder.**

1.12. Upon issue of a **Championship Permit** a set of **Championship Regulations** as issued to **Competitors** must be forwarded to the relevant sporting discipline **Executive** at the **ASN**. These **Regulations** must be signed and dated by the **Championship Co-ordinator** and bear the wording, in red font “PUBLISHED COPY”.

1.13. The issue of a **Championship Permit** in addition to an **Event Permit** requires that the **Organising Club** any sponsors and all **Track** owners are covered for Third Party Legal Liability not exceeding £100 million for any one incident. This cover does not include Product Liability Risk.

CHAPTER 4 CHAMPIONSHIPS

Appendix 3 - Car and Truck Race Championships

1. Car and Truck Race Championships

1.1. All Racing **Championship Permit** or **Series Registration** applications must be submitted by a recognised lead **Club.** No related discussion between the **ASN** and an applicant will be entered into without the express agreement of the lead **Club**. Subject to the authority of the **ASN** (Ch.1 Art.1.4) only **Clubs** which have been Recognised by the **ASN** for more than two years are permitted to apply for a **Championship Permit.** The deadlines for **Racing Championship** applications are set out below.

1.2. A Notice of Intent to run or continue to run a Race Championship in the following year must be registered with the **ASN**:

1.2.1. **1st August**: Date by which a **Notice of Intent** to run a new **Race Championship** in the following year must be submitted to the **ASN**. Any new '**Championship** must have guaranteed support for a minimum of three years ('the **Term**')(see 1.7 below). Any **Notice of Intent** application received after 1 August deadline will be refused.

1.2.2 **1st October:** Date by which a **Notice of Intent** to continue to run a Race **Championship** in the following year must be registered with the **ASN**. For an existing **Championship** a list of the number of starters at each round held in the current year and the year previous to the year of application must also be submitted.

1.2.3. Except for a **Winter Championship** run to the same regulations as a current main **Championship** and which is required to submit its regulations a minimum of 6 weeks prior to the first round any **Notice of Intent** received after 1st October will only be considered by the **Motor Racing Championship Control Panel** in exceptional circumstances and will be subject to a late submission fee of 100% of the **Championship** Permit **Fee**. Any **Notice of Intent** received on or after 1st January of the following year will be refused.

1.2.4. Any **Club** whose **Championship** has either ceased to run or has failed to commence will be required to submit a complete new application if approval is sought in any subsequent years.

1.3. Any major changes in a **Championship** must be notified to the **ASN** with the **Notice of Intent.**

1.4. Any new **Championship** or any fundamental change to an existing **Championship** (such as a new class or classes) conflicting with an existing registered **Championship** should provide justification to the **Motor Racing Championship Control Panel** that inclusion of the **Championship** or any fundamental change to an existing **Championship** will not detrimentally affect the safe fair or orderly conduct of motor sport.

1.5. The **Motor Racing Championship Control Panel** will be invited to discuss and may recommend to the **ASN** any **Championship** submitted and may delegate to a **Working Group** any unresolved queries. For the avoidance of doubt the ultimate decision to grant any **Permit** rests with the **ASN.**

1.6. Any applicant dissatisfied with a decision of the **Motor Racing Championship Control Panel** shall be entitled to request a review of the decision to be undertaken by the **Senior Chair** of the **National Court** or in the event that person is not available then by an alternate **Chair** nominated by the **Senior Chair** and whose decision shall be final. Such a request must be made in accordance with Ch.2 App.7 and must be received by the **ASN** within 14 days of written notification of the **Control Panel** decision together with the appropriate fee per Ch.1 App.2.

1.7. If the **Motor Racing Championship Control Panel** agrees in principle with an application for a new **Championship** then the **ASN** will require a Commitment Guarantee Agreement to be executed and delivered in a form satisfactory to the **ASN**:

a. for any new A or B Grade **Championships**; and

b. for any new C or D grade Race **Championship** where the **Championship** has not previously been run as a **Series** during the previous year, to demonstrate **Competitor** support and justify **Championship** status.

1.8. The Commitment Guarantee Agreement (Art.1.7 above) must be executed by the **Recognised Club**

proposing the new **Championship** *and* where applicable by the **Commercial** entity proposing the **Championship** through that **Recognised Club** in which case the Commitment Guarantee shall be joint and several.

1.9. The Commitment Guarantee Agreement will mandate that if the **Recognised Club** fails to seek a **Championship Permit** renewal by submission of a **Notice of Intent** and or making a **Permit Application** for the second and or third successive years then the **Guarantor(s)** must pay to the **ASN** the relevant sum specified in **Ch.1 App.2** (‘the **Default Sum’**).

1.10. The **Default Sum** shall be paid on demand in writing by the **ASN** accompanied by taxable invoice.

1.11. **All** issued and pending **Championship Permits** of the relevant **Recognised Club** shall be suspended until the **Default Sum** has been paid to the **ASN** or has been provided for to its satisfaction. All **Default Sums** forfeit to the **ASN** shall be used for the provision of prizes or for training or donation to a **Registered Charity** nominated by the **Board** of the **ASN**.

1.12. To maintain **Championship** status the minimum average number of starters during the current and previous year in a Grade A B C or D **Championship** should be 10. For **Truck Racing** and **Junior Car Race Championships** the average minimum number of starters should be 12.

1.13. For a **Championship** failing to meet the minimum numbers:

i. in the previous year will be issued with a warning.

ii. for a second consecutive year the **Championship** may lose its status including ability to use the term **Championship** but may run as a Series only with the approval of the **ASN**.

1.14. For the avoidance of doubt **Art.1.2.4.** of this Appendix applies in the case of any **Championship** that is subject of **Art.1.13.ii.**

1.15. The **ASN** in its discretion may agree a dispensation for a (single) **Venue Specific Championship** which does not meet the provisions of **Art.1.12** but this dispensation will be reviewed on an annual basis.

1.16. Any mixed discipline **Championship** in which more than three **Events** are **Car Races** will also be required to submit a **Car Racing Championship Permit Application** in addition to any other necessary applications

1.17. **1st February:** Date by which formal application and final details for a **Racing Championship** must be submitted to the **ASN**. A surcharge of 50% of the relevant fee will be incurred (a minimum of £100 or £50 for a **Club Championship**). No applications will be accepted after this date and outstanding incomplete applications will lapse.

1.18. **Competitor**s may be required to register for a **Championship** prior to the first **Event** in which they wish to gain points.

1.19. **Competitors** may be required to carry advertising as supplied to publicise the **Championship** in order to qualify for points and prize money.

1.20. **Organisers** retain the sole right to select or accept entries for any **Event** and neither the **ASN** or **Championship Organisers** can therefore be responsible for the refusal of an entry (Subject to the **Competitor’s** right of **Appeal** to the **National Court** provided in **Ch.2**).

1.21. It is recommended that the following priorities be adopted when making selection from all entries received by the closing date:

a. First: **Point** scorers in the **Championship**.

b. Second: Registered **Competitors** who have taken part in previous rounds of the **Championship**.

c. Third: Registered **Competitors** competing for the first time in the **Championship**.

2. Points Scoring

2.1. Unless the particular **Championship Regulations** specify differently all **Commercial Car Racing Championships** must utilise the points system as detailed in **Arts.2.2** to **4.3** below. Alternative systems of points allocation that are approved must be clearly indicated in the particular **Championship Regulations.**

2.2. **Championships without Classes**: points will be awarded at

20 – 15 – 12 – 10 – 8 – 6 – 4 – 3 – 2 – 1

An additional 2 points will be awarded to each **Competitor** achieving or equalling the race fastest lap where the race is timed.

2.3. **Championships with Classes**: points will be awarded in each class as follows:

a. 4 or more eligible starters in the class: 1st – 4; 2nd – 3; 3rd – 2; 4th – 1.

b. 3 eligible starters in the class: 1st – 3; 2nd – 2; 3rd – 1.

c. 2 eligible starters in the class: 1st – 2; 2nd – 1.

d. 1 eligible starter in the class: 1st – 1.

e. One additional point will be awarded to each **Competitor** achieving or equalling the race fastest lap in each class where the race is timed.

2.4. In all cases **Points** must be awarded on the basis of the **Final Results** of each **Event.**

3. Maximum Scores

3.1. Unless the particular **Championship** regulations specify differently a **Competitor**'s final total of points that may count towards the **Competitor**'s position in the **Championship** will be calculated as follows:

a. Where there are up to 10 rounds organised in the **Championship** a **Competitor** shall count the **Results** in the total number of **Events** run less one.

b. Where there are between 11 and 15 rounds organised in the **Championship** a **Competitor** shall count the **Results** in the total number of **Events** run less two.

c. Where there are over 15 rounds organised in the **Championship** a **Competitor** shall count the **Results** in the total number of **Events** run less three.

d. Points scored by a driver in different classes within a **Championship** will be totalled separately towards the final placing. A change of **Vehicle** within a class will not affect a driver's points total.

4. Resolving Ties

4.1. Unless the particular **Championship Regulations** specify differently ties will be resolved in the following order:

a. By considering in the best scoring **Event**s of the **Competitor**s concerned the number of first places or class wins and or

b. By considering the number of class or outright second places where there are no classes and so on in the best scoring **Events** and or

c. By considering the placings in all **Championship Events.**

CHAPTER 4 CHAMPIONSHIPS

Appendix 4 - Stage Rally Championships

1.1. Subject to the authority of the **ASN (**Ch.1 Art.1.4**)** only **Clubs** or **Associations** which have been recognised by the **ASN** for more than two years are permitted to apply for **Championship** registration or a **Championship Permit.**

1.2. Once a **Club** or **Association** has registered a **Championship** or has been issued a **Permit** it takes responsibility for controlling all **Sporting, Technical, Financial** and **Calendar** matters and must guarantee prize money as published.

1.3. Proposals to alter any of the **Sporting** or **Technical Regulations** for a **Championship** after registration or the issue of a **Permit** must be notified to the **ASN** for approval before publicity and must comply with **Ch.3.**

1.4. A copy of the **Championship** registration or **Permit** and a copy of the **Championship Regulations** must be lodged with all **Clubs** organising a qualifying round.

1.5. The **Stage Rally Championship Control Panel** reserves the right to classify any **Championship** as '**Commercial**' and then a sliding scale of charges may apply.

1.6. Failure by any **Club** or **Association** to comply with all **Championship Regulations** may result in the cancellation of the **Championship.**

1.7. The deadlines for **Stage Rally Championship** applications are as follows:

a. **1st September**: Date by which **International, National** and **Club Championships** must give **Notice of Intent** to run or continue to run a **Stage Rally Championship** in the following year.

i. For an existing **Championship** the number of starters at each round held in the current year of the **Championship** application must be submitted with the **Notice of Intent.**

ii. Any major changes which may conflict with other **Championship**s must be notified to the **ASN** with **Notice of Intent**.

iii. Any **Notice of Intent** received after 1st September will only be considered by the **Stage Rally Championship Control Panel** in exceptional circumstances. Their decision will be final. The **Stage Rally Championship Control Panel** will discuss and may recommend outline consent for those applications submitted.

b. **31st December**: Date by which final details must be submitted. All **Association Rally Championship** applications must be submitted in detail.

CHAPTER 4 CHAMPIONSHIPS

Appendix 5 - Speed Event Championships

1.1. All **Speed Championship Permit** applications must be submitted by a recognised lead **Club**. No related discussion between the **ASN** and any third party will be entered into without the agreement of the lead **Club**.

1.2. Subject to the authority of the **ASN** (Ch.1 Art.1.4) only **Clubs** or **Associations** which have been recognised by the **ASN** for more than two years are permitted to apply for a **Championship Permit.**

1.3. Once a **Club** or **Association** has registered a **Championship** or has been granted a **Permit** it takes responsibility for controlling all **Sporting, Technical, Financial** and **Calendar** matters and must guarantee prize money as published.

1.4. Proposals to alter any of the **Sporting** or **Technical Regulations** for the **Championship** after registration or the issue of a **Permit** must be notified to the **ASN** for approval before publicity.

1.5. A copy of the **Championship** registration or **Permit** and a copy of the **Championship Regulations** must be lodged with all **Clubs** organising a **Qualifying** round.

1.6. Failure by a **Club** or **Association** to comply with all **Championship Regulations** may result in the cancellation of the **Championship.**

1.7. The deadline for submitting **Speed Championship Applications** to the **ASN** is 28th February or 6 weeks before the first round whichever is earlier.

1.8. A 100% **Championship Permit Fee** surcharge may be imposed against any **Club** which fails to submit a complete **Championship** application in accordance with **Art.1.7 above.**

1.9. Any new **Championship** or any fundamental change to an existing **Championship** (such as a new class or classes) conflicting with an existing registered **Championship** will need to demonstrate that granting of the **Championship Permit** (or any fundamental change to an existing **Championship** as the case may be) will not detrimentally affect the safe fair or orderly conduct of motor sport.

1.10. Any applicant dissatisfied with a decision of the **ASN** shall be entitled to request a review of the decision to be undertaken by the **Senior Chair** of the **National Court** or in the event that the **Senior Chair** is not available then a **Chair** nominated by the **Senior Chair** and whose decision shall be final. Such a request must be made in accordance with **Ch.2 App.7** and must be received by the **ASN** within 14 days of written notification of the decision to be reviewed together with the appropriate **Fee**. (**Ch.1 App.2**).

CHAPTER 4 CHAMPIONSHIPS

Appendix 6 - Kart Racing Championships

There will be four types of **Short Circuit Non-Gearbox Championships**:

British & National Championships (Art.2 below)

Regional Championships (Art.3 below)

Championships held within a standard **Club Event** (Art.4 below)

Closed to Club Championships (Art.5 below).

1. General

1.1. All **Kart Race Championship Permit** applications must be submitted by a recognised lead **Club** and no related discussion between the **ASN** and any third party will be entered into without the agreement of the lead **Club.**

1.2. Subject to the authority of the **ASN** (Ch.1 Art.1.4) only **Clubs** or **Associations** which are recognised by the **ASN** for more than two years are permitted to apply for a **Championship Permit** and which may be granted at the sole discretion of the **ASN.**

1.3. Once a **Club** or **Association** has registered a **Championship** or has been granted a **Permit** it takes responsibility for controlling all **Sporting, Technical, Financial** and **Calendar** matters and must guarantee prize money as published.

1.4. Proposals to alter any of the **Sporting** or **Technical Regulations** for the **Championship** after registration or the issue of a **Permit** must be notified to the **ASN** for approval before publicity and must comply with Ch.3 App.10 Art.4.

1.5. A copy of the **Championship Registration** or **Permit** and a copy of the **Championship Regulations** must be lodged with all **Clubs** organising a qualifying round.

1.6. The **Kart Championship Control Panel** reserves the right to classify any **Championship** as '**Commercial**' when a sliding scale of charges may apply.

1.7. Failure by a **Club** or **Association** to comply with all **Championship Regulations** may result in the cancellation of the **Championship.**

1.8. The deadlines for **Kart Racing Championship Applications** are as follows:

a. **1st September:** Date by which **Notice of Intent** to run or continue to run a **Kart Championship** in the following year should be registered with the **ASN**.

i. Any major changes in a **Championship** must be notified to the **ASN** with the **Notice of Intent.**

ii. For existing **Championships** a list of the number of starters at each round held in the year previous to the year of application must also be submitted.

iii. For any new manufacturer backed **Championship** the **Notice of Intent** must also include evidence of guaranteed manufacturer support to the satisfaction of the **ASN** for a minimum of three years. Any other new **Championship** will ideally have run as a series of standalone races during the previous year so as to demonstrate **Competitor** support and justify **Championship Status.**

iv. Any **Notice of Intent** received after 1st September will only be considered by the **Kart Racing Championship Control Panel** in exceptional circumstances. Their decision as to whether to consider or not will be final.

v. The **Kart Racing Championship Control Panel** will discuss and may recommend outline consent for those **Championships** submitted and may delegate to a **Working Group** any unresolved queries.

b. **28th February or six weeks before the first round whichever is the sooner:** Date by which formal

application for a **Kart Racing Championship** previously notified must be submitted.

1.9. The average number of starters during the previous year in a **Grade A** or **B Championship** should be at least 15 and for a **Grade C** or **D Championship** should be at least 10.

1.10. A warning will be issued to a **Championship** which has been unable to meet the average number of starters as set out in **Art.1.9 above** during the previous year. If in the following year the average number of starters continues not to satisfy **Art.1.9 above** then the **Championship** may be refused.

2. British & National Kart Championships

2.1. To qualify as a **British** or **National Kart Championship** the **Championship Class** must be run in a minimum of three different **Regions.**

2.2. Only the designated **Core Classes** as defined in **Ch.18** will be permitted to be included in a **National Championship.**

2.3. Only the **ASN** may designate the **British** and **National Championship** promoter(s) as at its sole discretion it considers appropriate.

2.4. **British** and any **National Championships** will consist of a maximum of seven **Events**.

2.5. The **ASN** reserves the right to request pre-qualifiers as appropriate.

2.6. The current **British** or **National Championship Class** top 5 will automatically qualify but only for that specific class and subject to all other criteria being met.

3. Regional Kart Championship

3.1. To qualify as a **Regional Kart Championship** the **Class** must be run by a minimum of two **Clubs** and rounds must be held at a minimum of two and no more than five **Clubs/Venues** within that Region.

3.2. There must be no rounds outside the Region.

3.3. Unless the **ASN** has given prior written authorisation these **Championship Events** may only be held as part of a **Club Event.**

3.4. Unless the **ASN** has given prior written authorisation the following regulations apply to **Regional Kart Championships** and **Kart Championships** held within a standard **Club Event** and **Kart Club Championship.**

4. Kart Championships held within a Club Event

4.1. There are no restrictions to the number of rounds that may be held for these types of **Championships** provided that they are part of a **Club Event.**

4.2. The number of additional classes represented may not exceed 40% of the number of classes present at the **Club Event.**

4.3. The **Event Organiser** may require **Championship** drivers to fully integrate with the **Club Event** and they will then compete alongside the **Club Competitor.** In this circumstance no separate races are to be run for classes already run by the host **Club**.

5. Kart Club Championship

5.1. Unless the **ASN** has given prior written authorisation rounds of a **Kart Club Championship** may not be held at more than one **Venue.**

5.2. There are no restrictions on the number of qualifying rounds for a **Kart Club Championship.**

Chapter 5

Officials

CHAPTER 5 - OFFICIALS

General

1. All **Events** require **Officials**, **Marshals and other Volunteers** as provided by this Chapter and the specific discipline Chapters of the **NCR** or where applicable the **Code.**

2. This Chapter is separated into the following appendices:

PART A LICENSED ROLES

- App.1 **Declaration and Undertakings**
- App.2 **Officials Licensing Criteria and Requirements**
- App 3 **Registered Marshals and other Event Officials**
- App.4 **Stewards**
- App.5 **Clerks of the Course**
- App.6 **Technical Commissioners, Technical Officials including Scrutineers, Eligibility and Environmental Scrutineers**
- App.7 **Timekeepers and Handicappers**
- App.8 **Driving Standards Observers (Race)**
- App.9 **Radio Co-ordinators and Radio Controllers**
- App.10 **Rescue Crew and Rally Recovery Crew**
- App 11 **Emergency and Medical Officials**
- App.12 **Safety Delegates (Rally)**
- App.13 **Safety Car Crew (Rally)**
- App.14 **Liaison Officers**
- App 15 **Club Safeguarding Officers**
- App 16 **ASN Trainers**
- App 17 **Officiel d'Honneur**
- App.18 **Charts**

PART B REGISTERED ROLES

- App.1 **Event Secretaries**
- App.2 **Event Stewards**
- App.3 **Chief Marshals**
- App.4 **Championship Co-ordinators**
- App.5 **Mentors and Assessors**
- App.6 **Driving Standards Observers (non-Race)**

3. Acts Prejudicial to Motor Sport

3.1. A person signed on at or for an **Event** who does anything to bring motor sport into disrepute or commits an act prejudicial to the interest of the **ASN** or motor sport generally may face disciplinary action and an **Official** under investigation for such a matter may have any **Licence** suspended pending conclusion of the investigation or other action under these **NCR**.

3.2. The **Race with Respect Code** will apply to all **Officials, Marshals** and others who are involved in running a **Motor Sport Event.**

3.3. The **ASN Code of Conduct** applies to all **Officials, Marshals** and others who are involved in running a **Motor Sport Event.**

3.4. All **Officials, Marshals** and others who are involved in running a **Motor Sport Event** must sign on and identify themselves as being present in order to obtain Personal Accident Insurance cover. They must sign the undertaking provided at **Part A App. 1 to this Chapter.**

3.5. Except for **Stewards of the Event** the same person at any **Event** can undertake several of the duties detailed below provided they are qualified for each.

3.6. **Stewards of the Event** must not undertake any other duties.

3.7. **Officials** (other than **Stewards**) may appoint **Deputies** to whom any of their duties may be delegated (subject to these **Regulations**).

3.8. As a general principal all senior **Officials** should be at least 18 years of age.

3.9. At any **Event** there must be:

a. A **Clerk of the Course**

b. A **Scrutineer**

c. **Steward**(s) and

d. **Timekeepers** if appropriate.

3.10. The **Stewards of the Event** act in an honorary capacity but other **Officials** and **Volunteers** may be remunerated as specified in the **Regulations**.

3.11. The **Organising Club** is responsible for meeting all fees in respect of **Officials** nominated by the **ASN** who will invoice the **Club** or **Organiser** accordingly.

3.12. The **ASN** may nominate one or more **Stewards** or **Observers** to any **Event**.

3.13. All other **Officials** will be nominated by the **Organisers** to the requirements of the **ASN** who may require certain **Officials** to be licensed or otherwise registered as provided by these **Regulations** and always subject to the overriding authority of the **ASN** (Ch.1 Art.1.4).

3.14. No individual may compete in an **Event** when nominated as an **Official.** This includes any person nominated as an **Official** in the **Official Documents** or programme of an **Event** even though the individual named does not in fact carry out their official duties. This **Regulation** does not apply to any person acting solely as a **Club Safeguarding Officer (CSO)**.

3.15. **Registered Clubs** must allow **ASN Pass** holders free and appropriate access to any **ASN** sanctioned **Event**.

3.16. The **ASN Pass** Holders are defined as current members of the **Motor Sports Council,** current **Directors** and **Executive Staff** of the **ASN**.

3.17. All **ASN Pass** holders will make themselves known to the **Event Secretary** to 'sign on'.

3.18. Apart from their appointment as an **Official** of the **Event** an **ASN Pass** holder will not have any **Official** duty nor have the authority to intervene in the running of the **Event**.

3.19. The **ASN Pass** which is the property of the **ASN** will show the year of validity and identify the holder and is not transferable.

4. Judicial

4.1. Ch.2 covers all regulatory matters relating to the **Judicial Process** and **Procedures.** Whilst all those officiating / marshalling on an **Event** play their part in ensuring the sport is safe, fair and fun; the following roles play a significant part in ensuring the judicial process is managed according to the regulations

a. **Stewards** (Part A App.4)

b. **Clerk of the Course** (Part A App.5)

c. **Technical Officials** (Part A App.6)

d. **Judge of Fact** including **Driving Standards Observers** (Part A App.8)

e. **Event Secretary** (Part B App.1)

4.2. All **Officials** and **Marshals** may contribute reports to the **Officials** of the **Event** that would be considered as part of the **Judicial** evidence to assist with the decision-making process.

5. Stewards including Championship Stewards

Part A App.4 to this Chapter applies

5.1. The **Steward's** main duties are to see 'fair play' and to ensure that the event is being run in a safe manner. They normally act as the second judicial body at an event and are responsible for hearing and adjudicating upon any appeal against a decision by the **Clerk of the Course** or other **Official.**

5.2. **Stewards** of an **Event** must not in any way be responsible for its organisation and must not have any executive duty in connection with the **Event** except in relation to any potential or actual fatal incident when the **Senior Steward** must assume control of the **Event** and notify the **ASN** immediately.

5.3. **Championship Stewards** (Ch.1 Art.1.4) shall be appointed by the **Organisers** of **Championships** and may only adjudicate on any disputes irregularities or appeals arising from the approved **Championship Regulations** and subject to rights of **Appeal** provided by Ch.2**.**

6. The Event Director

6.1. The **Event** Director (**Race Director** or **Rally Director** etc) appointed at major **International Events** by the **Organisers** (or the **ASN**) is responsible for the overall planning of the **Event** and for maintaining the timetable (including non-sporting aspects) and for compliance with **FIA** and **ASN** prescriptions and protocol.

7. The Clerk of the Course

Part A App.5 to this Chapter applies

7.1. The **Clerk of the Course** has responsibility for the overall conduct and control of an **Event** in accordance with the **Regulations**, the **Organisers' Programme** and **Organising Permit.**

7.2. The **Clerk's** powers and responsibilities are set out at Part A App.5 to this Chapter.

7.3. Subject only to the exceptions in Ch.18 or **International Events** or as exceptionally authorised by the **ASN** where the **Code** applies to the **Event** the **Clerk of the Course** acts as the **Event** first **Judicial** body. The **Clerk** or the **Deputy Clerk** has the power to impose penalties in accordance with Ch.2 App. 2 (excluding the power of **Suspension** and or **Exclusion**).

8. Technical Commissioners and Scrutineers

Part A App. 6 to this Chapter applies

8.1. **Technical Officials** are licensed annually by the **ASN** and appointed to **Events** in accordance with Part A App.18 Chart 1.

8.2. **Technical Commissioners** are empowered to check the eligibility of **Vehicles** for compliance with any technical regulations and to undertake measurements or examinations as necessary.

8.3. **Scrutineers** are responsible for checking the mechanical state of competing **Vehicles** in terms of compliance with the regulations – ensuring fair play – and general safety.

8.4. **Eligibility Scrutineers** are appointed to certain Formulae for which **Technical Commissioners** have not been appointed.

8.5. **Eligibility Scrutineers** names must be published in the **Official Documents** and can be appointed by the **Organisers** in respect of **Competition Classes** for which **Technical Commissioners** have not been specified. All **Championships** must appoint an **Eligibility Scrutineer**.

8.6. **Environmental Scrutineers** (Part A App.9 to this Chapter applies) are appointed by **Organisers** (and occasionally the **ASN**) for all **Rallies** involving cars built after 1941 and for other **Events** using the public highway. At all other **Events** the **Organiser** and / or **Chief Scrutineer** may appoint an **Environmental Scrutineer**.

9. Timekeepers and Handicappers

Part A App.7 to this Chapter apply

9.1. The **Timekeepers** role is to record **Competitors'** times and positions to determine **Event Results.**

9.2. **Timekeepers** and **Handicappers** must hold the relevant **ASN** licence (except for **Interclub** or **Clubman** non-speed **Competitions** when this requirement only applies if specifically imposed on the **ASN Organising Permit).**

9.3. **Timekeepers** are subdivided into groups according to their specialisation ability and experience (**Part A App.7**).

9.4. **Licensed Timekeepers** are appointed to **Events** by the **Organisers**.

9.5. An **ASN-Licensed Handicapper** must be in attendance throughout any **Event** where **Results** depend on a handicap.

10. Driving Standards Observers

Part A App.8 to this Chapter applies

10.1. The **Organisers** or the **ASN** can appoint the **ASN**-licensed **Driving Standards Observers** to monitor driving standards at all grades of **Race Events**.

11. Radio Controllers and Radio Co-ordinators (Rally)

Part A App.9 to this Chapter applies

11.1. **Radio Co-ordinators** and **Radio Controllers** assist and or deliver through the administration and operation of the **ASN Safety and Medical** frequency and adoption of the relevant processes and procedures.

11.2. **Radio Controllers** manage the planning and operation of the event radio and communications networks, ensuring that there is a free flow and constant exchange of information between the various motorsport Officials and particularly that any response to a safety-related incident is properly coordinated with the **Chief Medical Officer** and safety related personnel.

12. Rescue Crew and Rally Recovery Crew

Part A App.10 to this Chapter applies

12.1. **Rescue Officials** provide immediate medical and extrication facilities at the scene of an incident. They form part of the safety provision at an **Event** together with **Doctors** and **Paramedics.**

12.2. **Recovery Crew** recover stricken **Vehicles** and provide assistance with the stabilisation of **Vehicles** in order for **Rescue Crews** to carry out driver extrication. They also assist with the provision of basic life support in the event of a serious incident.

13. Emergency and Medical Officials

Part A App.11 to this Chapter applies

13.1. For specific requirements for units and equipment please refer to **Ch.11.**

14. Safety Delegates (Rally)

Part A App.12 to this Chapter applies

14.1. The role of the **ASN Safety Delegate** is to assess the effectiveness of safety measures aimed at keeping the public, volunteers and competing crews safe. They support and provide advice to help in ensuring the safe planning and management of an event. Further information can be found in the **Stage Rally Safety** Requirements.

15. Safety Car Crew Members (Rally)

Part A App.13 to this Chapter applies

15.1. The primary function of the **Safety Cars** on an **Event** is to check the course for route and safety information providing this information to **Rally Control.** All **Safety Cars** whether **Spectator Safety, Intermediate Safety**, 000, 00 or **Sweeper Cars** will be referred to as **Safety Cars.**

16. Liaison Officers

Part A App.14 to this Chapter applies

16.1. The **ASN** has appointed **Liaison Officers** to cover the following areas of the sport:

a. **Forestry Liaison**

b. **Route Liaison**

c. **Ministry of Defence**

Further information can be found in **Part A App.14.**

17. Club Safeguarding Officers

Part A App.15 to this Chapter applies

17.1. The role of the **Club Safeguarding Officer (CSO)** is to act in a leadership capacity to support the development of a culture where abuse cannot occur by promoting best safeguarding practices and challenging poor behaviours. The **CSO** acts as the point of contact with the **ASN** for advice on safeguarding matters to various members of our community

18. ASN Trainers

Part A App.16 to this Chapter applies

18.1. Trainers are responsible for the delivery of approved training material at training days. This training may be for **Marshals** or **Licensed Officials.**

19. Officiel d'Honneur

Part A App.17 to this chapter applies

19.1. **Officials** who have completed their active service to motor sport may be invited by the **ASN** to become an **Officiel d'Honneur.** This appointment provides entitlement to various privileges and their advice may be called upon to make optimum use of their wealth of experience.

20. Marshals and other Event Officials

Part A App.3 and associated appendices apply to these roles

20.1. The **Marshals Pathway** describes **Marshals** roles and defines the criteria required for each role.

20.2. The **Marshals Pathway** consists of four levels:

a. Registered Marshals

b. Grade 1 – Developing

c. Grade 2 – Doing

d. Grade 3 – Leading

20.3. The **Pathway** details can be found, along with the upgrade and maintenance criteria on the **ASN Website** and an overview can be found in **Part A App.3.**

20.4. An adequate number of competent **Marshals** must be on duty throughout any **Event** and be allocated to locations and duties appropriate to their individual experience and training.

21. Judges of Fact

21.1. Judges (of Fact) may be appointed by an Organising Club, ASN or (with ASN approval) a Regional Association to adjudicate on any factual occurrence or question of eligibility at an Event.

21.2. No Protest or Appeal can be made against a Judge in relation to any statement of fact, which must be accepted as a fact unless later corrected by them (with the approval of the Stewards of the Event), with the exception of reports from Eligibility Judges of Fact (other than short circuit karting) which may be appealed under Chapter 2.

21.3. A Judge's decision must not constitute a statement of results, and Judges are not empowered to impose penalties, as they will not necessarily have taken into account any prevailing conditions.

21.4. Except for Events where any part takes place on the public highway, Judges must report to the Clerk of the Course for any necessary action to be taken. (See **7.2** and **7.3** for procedures on Rallies and other events.)

21.5. The Supplementary Regulations for an Event will specify the facts to be judged and the specific Officials who will judge them. The names, both first and last, of the officials appointed as Judges must be listed in the Programme or an Official Bulletin or posted on the Official Notice Board with date and time of publication.

. In particular:
a. The Chief Scrutineer of an Event and members of the Technical Commission are considered Judges in respect of Vehicle Eligibility.
b. Environmental Scrutineers and Officials in charge of Noise Meters are considered Judges in respect of Noise.

21.6. The use of cameras or similar equipment to facilitate a Judge's decision is allowed, but only if the equipment is under the control of the Organisers.

21.7. In such cases the Judge can delay a decision until the evidence is obtained.

CHAPTER 5 OFFICIALS

PART A

Appendix 1 - Declaration and Undertakings

All **Officials** and **Marshals** who **Volunteer** at an **Event** must identify themselves by signing on in order to obtain **Personal Accident Insurance** cover. They must also sign the following undertaking:

'I agree to act in an official capacity at this Event and in consideration of this the Organising Club(s) have effected for my benefit a Personal Accident Insurance Policy for death or benefits as prescribed more specifically by the ASN.

I have been given an opportunity to read the NCR of Motorsport UK and, if any, the Official Documents for this Event and agree to be bound by them.

I declare that I am physically and mentally fit to carry out my duties and that I do not have any disabilities or mental health conditions that may affect my ability to carry out my duties. I declare that I have not consumed any substance which may adversely affect my ability to carry out my duties. I will inform the Organisers immediately should any change in my condition occur which I may have reason to believe would affect my ability to carry out my duties.

I acknowledge that I understand the nature and type of Competition and that I may be exposed to the potential risk and dangers inherent in motor sport and I will undertake my duties with their associated risks with due and proper regard for my safety and that of others.

Further, I understand that all persons having any connection with the promotion and / or organisation and / or conduct of the Event are insured against loss or injury caused through negligence.

I hereby agree to abide by all ASN Codes, Guidelines and Policies and where applicable those of the FIA.

I understand that my personal data is being processed and retained by the Organisers and Motorsport UK solely for the purposes of running this Event and will be handled in accordance with the Motorsport UK

Data Protection Policy which can be found at www.motorsportuk.org/data-protection. I understand that I can withdraw consent to process my personal data at any time by contacting the Organisers and/or Motorsport UK but that this may affect my ability to act as an Official.

*MEDICAL PRACTITIONERS. All doctors attending Motorsport UK Events as medical officers must be fully registered with the General Medical Council, must be members of a recognised medical defence organisation and be covered for work outside a hospital. Doctors must be competent in the field in which they are working and must be aware that they are expected to provide themselves with such equipment as they deem necessary for the proper performance of their duties (**Ch.5 Part A App.11 Art.1**).'*

CHAPTER 5 OFFICIALS - PART A

Appendix 2 - Officials Licensing Criteria and Requirements

1. General

1.1. The duties and responsibilities of all **Officials** are detailed in Ch.5.

1.2. It is expected that as representatives of the **ASN Officials** in particular will be suitably dressed for their role and be readily identifiable as **ASN Officials**.

1.3. The **ASN Official Licence** is the most appropriate means of identification and should be carried and if possible be visible at all times when acting in the capacity of an **Official.** Every person body or group of people holding an appointment of **ASN** whether as an **Official** or **Council** or **Committee** member be deemed to have and recognise that they have:

a. Made themselves acquainted with these **Regulations.**

b. Accepted without reserve the consequences resulting from these **Regulations.**

c. Agreed they will not become concerned in any action in law against the **ASN** their **Officials** or any other persons or **Board** subject to these **Regulations** without the prior written consent of the **ASN** or as a result of their own personal injury or death.

1.4. An **Official Licence** granted by the **ASN** does not constitute a certificate of the competency of the holder.

1.5. Any Official whose role meets the definition of **Regulated Activity** is required to have a Suitability check completed. The suitability check certificate number and date of issue is a requirement for the issuing of the licence.

2. Ages

2.1. **Application**s for those under 18 years of age must be counter-signed by a Parent or Guardian. Proof of guardianship may be required.

2.2. As a general principle all senior **Officials** should be at least 18 years of age.

2.3. Certain **Officials** may be invited by the **ASN** to become an **Officiel d'Honneur** and will then be entitled to various privileges. Their advice may be called upon to make optimum use of their wealth of experience.

3. Period and Validity

3.1. Unless otherwise rendered invalid the period of validity of all **Licences** for the purposes of acquaintance and submission to these rules runs from the 1st January to the end of the calendar year shown on the **Licence**.

3.2. To be valid the **Licence** of an **Official** must be signed by the **Official** and must bear a passport type image being a current likeness of the holder.

3.3. The **ASN Official Licence** is issued bearing the holder's name, **Licence** number, **Licence** grade(s) and image.

3.4. **Steward**s will be issued with an **ASN Stewards Identification** in addition to their **ASN Officials Licence**. The Identification shall bear the holder's name **Licence** number and image.

4. Holder's Indemnity and Undertakings

4.1. Once granted an **ASN Official Licence / Registration** the holder undertakes as follows:

a. They will abide by the **ASN Regulations** and any amendments or additions which may be in force at any time that the **Licence** is used for the purpose of officiating at a motor sport **Event**.

b. They acknowledge that anyone having any connection with the promotion and / or organisation and / or conduct of an **Event** is insured against loss or injury caused through their negligence.

c. Whilst officiating at an **Event** they must be medically fit to do so and to carry out their required duties.

d. They must not be under the influence of or consume alcohol or banned substances during the running of an **Event**.

e. They may not compete in an **Event** for which they are nominated as an **Official.** This includes anybody nominated as an **Official** in the **Official Documents** or programme of an **Event** even though the individual named does not in fact carry out any **Official** duties.

4.2. All **Officials**, **Marshals, Volunteers** and members of the **Media** must be identifiable as required by the **Official Documents.**

4.3. They perform their duties at their own risk and must not put themselves at unnecessary risk beyond that required for the performance of their duties.

4.4. **Officials**, **Marshals** or **Volunteers** under the age of 18 must only be given duties that require them to be within an agreed location unless they are under the supervision of a responsible adult, **Official, Marshal** or other **Volunteer.**

4.5. **Organisers** must be in possession of the addresses, contact details and emergency contact details of all **Officials**, **Marshals** and **Volunteers.**

4.6. Any person under the age of 18 signing-on at an **Event** and where the **Parent** is not present must be accompanied by a **Guardian**.

5. Officials' Expenses

5.1. **Officials** must disclose fees earned from motor sports activities to HM Revenue and Customs and account for tax where necessary.

6. Licence and Registration Retention and Downgrading

6.1. Applicants may retain their **Licences** or **Registrations** if they meet the criteria set out in the **NCR.**

6.2. If an applicant for whatever reason does not qualify to retain their current **Licence** or **Registration** grade they will be automatically downgraded according to these **NCR.**

6.3. Upon renewal an applicant may voluntarily take out a **Licence** or **Registration** of a lesser grade than they are entitled to.

7. Licence and Registration Upgrading Procedure

7.1. Any applicant wishing to upgrade their **Licence** or **Registration** on renewal and who has met the upgrading criteria of the **NCR** must forward the completed relevant **Renewal Form** together with the appropriate qualification criteria and any required payment to the **ASN**.

7.2. Applicants wishing to upgrade a current **Licence** or **Registration** must forward to the **ASN** a written request together with the appropriate fee (if any) and the appropriate qualification criteria as detailed within the **NCR.**

8. The Officials Pathways

8.1. These exist to ensure the following roles have a consistent and standard framework for the development, maintenance, upgrade / downgrade of a new and existing **Official.** These frameworks are in place for the following – **ASN Stewards**, **Clerks, Scrutineers, Timekeepers, Rescue Crew, Recovery Crew (Rally), Radio Controllers** and **Co-ordinators (Rally)**. The specific **Pathways** and their associated requirements are included in the relevant appendix. Other **Licensed** roles have their own application and maintenance programmes.

CHAPTER 5 OFFICIALS - PART A

Appendix 3 - Registered Marshals and other Event Officials

Marshals Registration Criteria and Requirements

1. General

1.1. The duties and responsibilities of all **Event Officials** including **Marshals** are detailed in **Ch.5.**

1.2. It is expected that as representatives of the **ASN** and **Event**, **Marshals** and **Event Officials** will be suitably dressed for their role and be readily identifiable as **Marshals** or **Event Officials**.

1.3. The **ASN** official **Registration** is the most appropriate means of identification and should be carried and if possible be visible at all times when acting in the capacity of a **Marshal** or **Event Official.** Every person, body or group of people appointed by the **Club** / **Event** or **ASN** whether as an **Official** or **Council** or **Committee** member is deemed to have and recognise that they have:

a. Made themselves acquainted with these **Regulations.**

b. Accepted without reserve the consequences resulting from these **Regulations.**

c. Agreed they will not become concerned in any action in law against the **ASN** their **Officials** or any other persons or **Board** subject to these **Regulations** without the prior written consent of the **ASN** or as a result of their own personal injury or death.

1.4. An **Official Licence** or **Registration** granted by the **ASN** does not constitute a certificate of the competency of the holder.

2. Ages

2.1. **Application**s for **Registration** made by those under 18 years of age must be counter-signed by a Parent or Guardian. Proof of guardianship may be required.

2.2. As a general principle all senior **Officials** should be at least 18 years of age.

2.3. Certain **Officials** may be invited by the **ASN** to become an **Officiel d'Honneur** and will then be entitled to various privileges. Their advice may be called upon to make optimum use of their wealth of experience.

2.4. The **Cadet Pathway** is available on the **ASN Website** and provides further information.

3. Period and Validity

3.1. Unless otherwise rendered invalid the period of validity of all **Licences** and **Registrations** for the purposes of acquaintance and submission to these **Regulations** runs from the 1st January to the end of the calendar year shown on the **Licence / Registration**.

3.2. To be valid the **Licence / Registration** of an **Official** must be signed by the **Official** and must bear a passport type image being a current likeness of the holder.

3.3. The **ASN Official Licence / Registration** is issued bearing the holder's name, registration number, grade(s), role(s) and image.

4. Holder's Indemnity and Undertakings

4.1. Once granted an **ASN Official Licence / Registration** the holder undertakes as follows:

a. They will abide by the **ASN Regulations** and any amendments or additions which may be in force at any time that the **Licence / Registration** is used for the purpose of officiating at a motor sport **Event**.

b. They acknowledge that anyone having any connection with the promotion and/or organisation and/or conduct of an **Event** is insured against loss or injury caused through their negligence.

c. Whilst officiating at an **Event** they must be medically fit to do so and to carry out their required duties.

d. They must not be under the influence of or consume alcohol or banned substances during the running of an **Event** and in the interests of Safety consent to being tested or assessed accordingly.

e. They may not compete in an **Event** for which they are nominated as an **Official** whether of the **Event** or of any **Championship** forming part of the **Event.** This includes anybody nominated as an **Official** in the **Official Documents** or programme of an **Event** or of any **Championship** forming part of an **Event** even though the individual named does not in fact carry out any Official duties.

4.2. All **Officials**, **Marshals, Volunteers** and members of the **Media** must be identifiable as required by the **Official Documents** and these **Regulations.**

4.3. **Officials, Marshals** and **Volunteers** perform their duties at their own risk and must not put themselves at unnecessary risk beyond that required for the performance of their duties.

4.4. **Officials**, **Marshals** or **Volunteers** under the age of 18 must only be given duties that require them to be within an agreed area unless they are under the supervision of a responsible adult, **Official, Marshal** or other **Volunteer.**

4.5. **Organisers** must be in possession of the addresses, contact details and emergency contact details of all **Officials**, **Marshals** and **Volunteers.**

4.6. Any person under the age of 18 signing-on at an **Event** and where the **Parent** is not present must be accompanied by a **Guardian.**

5. Licence and Registration Retention and Downgrading and Removal

5.1. Applicants may retain their **Licences** or **Registrations** if they meet the criteria set out in the **NCR.**

5.2. If an applicant for whatever reason does not qualify to retain their current **Licence** or **Registration** grade they may be downgraded.

5.3. Upon renewal an applicant may voluntarily take out a **Licence** or **Registration** of a lesser grade than they are entitled to.

5.4. All **Licences** and **Registrations** are the property of the **ASN** and shall be surrendered to the **ASN** on demand.

5.5. Any **Licence** or **Registration** may be suspended or withdrawn temporarily or permanently by the **ASN** but the reasons shall be stated.

6. Licence and Registration Upgrading Procedure

6.1. Any applicant wishing to upgrade their **Licence** or **Registration** and who has met the upgrading requirements of the **NCR** must forward the completed relevant **Renewal Form** together with the appropriate documentation.

6.2. The Marshals Pathways

6.3. These pathways exist to ensure that there is a consistent and standard framework for the development, maintenance and upgrade / downgrade of new and existing **Marshals.** The specific Pathways and their associated requirements are available from the **ASN.**

CHAPTER 5 OFFICIALS - PART A

Appendix 4 - Stewards

Training is provided for at Art.4 of this Appendix

1. General

1.1. High level summaries of the duties and responsibilities of all **Officials, Marshals and other Event Officials** are detailed in **Ch.5.**

1.2. The relevant general provisions of **Part A App.2 to this Chapter** apply.

1.3. Subject only to the exceptions in **Ch.18 (Kart Race)** and in respect of **International Events** or as exceptionally authorised by the **ASN** the **Stewards of the Event** act as the second judicial body at any **Event** and are responsible for hearing and adjudicating upon any permissible **Appeal** (**Ch.2**) against a decision by the **Clerk of the Course** or other **Official**. The **Stewards** have the power to impose penalties in accordance with **Ch.2 App.2**.

1.4. Where the **Event** is governed by the International Sporting **Code Stewards** are the **Event Judicial** body subject to any penalty functions explicitly vested in the **Clerk of the Course** or a **Race Director.**

1.5. **ASN Stewards** will be issued with an **ASN Stewards Identification** in addition to their **ASN Officials Licence / Registration**. The badge shall bear the holder's name **Licence** number and image.

2. Responsibilities

2.1. **Stewards** are responsible for forwarding to the **ASN Competitor** undertakings to pay any **Fines** or **Protest Fees** whether obtained direct from the **Competitor** or via the **Event Secretary.**

2.2. **Stewards** should be thoroughly experienced in motor sport and of those appointed by an **Organising Club** at least one must be a person whose motor sporting activity is not confined to that **Club** alone and who is not an **Official** of that **Club.**

2.3. A **Steward** appointed by the **ASN** to an **Event** must have no executive duties in connection with the organisation of that **Event** and is responsible only to the **ASN**.

2.4. The **ASN Steward's** duties commence upon appointment by the **ASN.**

2.5. In an **Event** comprising several **Competitions** there may be different **Stewards** for each **Competition.**

2.6. Each **Stewards**' panel must comprise of three (and no more) **Stewards** one of whom may be **ASN**-appointed. If three are not available suitable people must be co-opted.

2.7. Where the **ASN** appoints a **Steward** that **Steward** will act as chair of the **Stewards of the Event**.

2.8. In the absence of an **ASN**-appointed **Steward** the **Event Steward** appointed by the **Organiser** will assume those duties.

2.9. Exceptionally at **Clubman Road** / **Navigation Rallies** and **Clubman** or **Interclub, Trials**, **Cross Country** or **Autotest Events** there may be a minimum of one **Event Steward** but always an odd number.

2.10. Copies of all **Official Documents** must be provided by the **Organising Club** for the use of **Stewards** as far as possible in advance of the **Event**.

2.11. The **Stewards** must satisfy themselves that the conditions of the **Permit** (and **Track Licence** if appropriate) are complied with and subject to **Art.2.17 below** have the power to withdraw a **Permit** in the **Event** of non-compliance.

2.12. **Organisers** should make available a suitable facility for the **Stewards**' discussions and should arrange for a meeting with the **Stewards** prior to the start of an **Event** so that any issues may be discussed.

2.13. **Stewards** must initiate investigations into any incident or breach of **Regulations** they observe or is reported to them.

2.14. The **Stewards** have authority to act from the moment that documentation or **Scrutineering** commences until the deadline for any **Appeals** has expired or any **Right of Review** procedure has been completed by them.

2.15. **Stewards** may adjourn the hearing of any **Appeals** if required.

2.16. In cases where a **Judicial Hearing** must take place after an **Event** the **Stewards** may delegate their authority to the panel of **Stewards** at a subsequent **Event** or alternatively to a panel of **Stewards** assembled for this purpose and which shall be selected by the authority(ies) responsible for the selection of the original panel. Such delegation must be made in writing.

2.17. **Stewards** have authority to enforce compliance with the **Regulations** and to adjudicate on any **Appeal** arising during the **Event**. In particular they can:

a. Modify the **Supplementary Regulations** in exceptional circumstances.

b. Subject to **Art.2.18 of this Appendix** in the case of **Force Majeure** or for safety reasons instruct the **Clerk of the Course** to postpone abandon or stop an **Event** or part of an **Event** (except as provided for in **(Ch.12).** Any such instruction must be formally recorded. Provided that an **Event** is run in more than one heat or part these powers may if thought fit be exercised in respect of one heat or part.

c. Deal with any matter referred by the **Clerk of the Course** under the **Clerk's Powers** and if the offence is considered sufficiently serious impose further penalties in accordance with **Ch.2.**

d. Alter the composition of or consolidate heats.

e. Authorise a re-run in the case of dead-heats.

f. Accept a correction made by a **Judge of Fact.**

g. Inflict a **Reprimand, Fine, Time** or **Position** penalty, **Disqualification** or **Suspension** but not **Exclusion** pursuant to **Ch.2.** Any such penalty and the points accruing if any must be recorded on the **Steward's Report Judicial Summary** (**Art.3.1.c of this Appendix**).

h. Decide that a penalty or other decision appealed against can be waived varied or a fresh penalty imposed.

i. Amend the results of a **Competition** pursuant to **Ch.2.**

j. **Order** the removal from the **Course** and its precincts or inflict a penalty upon any **Competitor** or **Driver** who refuses to obey the order of a responsible **Official.**

k. Approve any request from the **Clerk of the Course** to modify the position of the starting or **Finish Line** or the course to ensure the reasonable safety of **Drivers** or spectators or to alter the programme if circumstances so require.

l. **Order** in writing on behalf of the **ASN** the impounding or sealing of a **Vehicle** or equipment for as long as may be necessary for technical examination following an accident or upon suspicion of non-compliance with the **Technical Regulations.**

m. Sign the **Upgrade Cards** of short circuit **Kart Competitors** for **Events** where the **Clerk of the Course** retains responsibility for **Judicial** duties as may be required for upgrading a **Competition Licence**. The following conditions will need to be met before a signature may be given on **Kart Upgrade Cards:**

i. A **Competitor** must perform satisfactorily throughout the **Event** at competitive speeds and must not receive any adverse reports regarding driving. **Competitors** may not necessarily have completed the Final on the day.

ii. Not more than one signature per **Event**

iii. **Kart Endurance Events** do not qualify for upgrading signatures

iv. **Tyro Kart Events** do not qualify for upgrading signatures.

n. In cases of **Force Majeure** authorise a suitable **Official** who does not hold the correct licence to take over the duties of an absent **Official.**

o. Sign the **Clerk of the Course Upgrade Card** as may be required to certify requalification or for upgrading their **Officials Licence.** The conditions to be met are detailed in **Part A App.2 to this Chapter.**

2.18. The **Stewards of the Event** have another major function to prevent unnecessary danger and the **ASN Steward** has overriding authority in matters of safety save where the **ASN** has appointed a **Safety Delegate** in which case the **Safety Delegate** shall have overriding authority in matters of safety.

2.19. The **Stewards of the Event** should always try and act as a body unless there are overriding considerations of urgency.

2.20. Any **Steward** who is forced to take individual action should inform the other **Stewards** and the **Clerk of the Course** as soon as possible.

2.21. No **Steward** should commit any act or give any order in the organisation of an **Event** except as required to execute the **Steward**'s role or in the **Event** of a potentially or actual fatal incident when the **Senior Steward** must assume control and notify the **ASN** immediately.

3. Stewards Report

3.1. As soon as possible after an **Event** the **ASN Steward** with assistance from the **Event Secretary / Clerk of the Course** must send a **Stewards of the Event Report** to the **ASN** giving particulars of:

a. **Incidents** involving injury or damage to property including medical statistics

b. **Protests/Appeals** lodged and action taken.

c. Penalties imposed and any recommendations in such cases and a synopsis of the evidence giving rise to the **Judicial Decisions.**

d. General comments on the organisation of the **Event** and the exercise of their duties.

e. Any other relevant observations as to the conduct of the **Event**.

f. Any **Notices of Intention to Appeal** and undertakings to pay **Appeal Fees** received in accordance with **Ch.2**

g. Such other reports and information as the **ASN** may in its absolute discretion require.

4. ASN Stewards Training

4.1. Training will include a modular training programme under the supervision of experienced **ASN Stewards** covering issues across a range of motor sport disciplines.

4.2. Upon satisfactory completion of the training programme and assessment in role appointment as an **ASN Steward** is made on a probationary basis for the ensuing year.

4.3. During the training period an experienced **ASN Steward** will be available to mentor the probationer at **Events** and provide appropriate feedback.

4.4. Subject to receipt of satisfactory reports by the **ASN** the probationer is then appointed to **Events** as an **ASN Steward**.

4.5. **ASN Stewards** are required to attend at least two out of three consecutive **ASN Stewards** training sessions for which they are eligible to maintain their status.

CHAPTER 5 OFFICIALS - PART A

Appendix 5 - Clerks of the Course

This Appendix is divided as follows:

- Responsibilities of a **Clerk of the Course**
- Powers
- Licensing and Upgrade requirements
    - **Race**
    - **Sprint** or **Hill Climb**
    - **Rallycross**
    - **Stage Rally**
    - **Cross-Country**
    - **Kart**

The **ASN** may require certain **Clerks of the Course** to be licensed.

1. Responsibilities of a Clerk of the Course

1.1. Except as provided by specific Discipline **Regulations** the **Clerk's** duties commence at the opening date for receiving entries and in all cases conclude once the results have been finalised, any **Protest** time has expired, and all **Protests** and **Appeals** have been dealt with and any post-**Event** inspections of **Vehicles** or components have been completed and reported on or any **Right of Review** procedure has been completed by the **Clerk.**

1.2. The **Clerk of the Course** must be present throughout **Practice** and the **Competition** to carry out the specified duties.

1.3. The specific responsibilities of the **Clerk of the Course** are:

a. Ensure that all **Official Documents** are complied with and that all necessary equipment is available.

b. Keep order in conjunction with any **Officials / Marshals** appointed having special responsibility for public security.

c. Ensure that all **Officials** / **Marshals** are provided with the information necessary to carry out their duties.

d. Ensure the appropriate **Officials / Marshals** are at their posts and report accordingly to the **Stewards of the Event** before any **Event** commences.

e. Ensure that the conditions of any **Permit** and **Track Licence** have been fulfilled before the start of **Practice** or **Competition** and report accordingly to the **Stewards of the Event**.

f. Except in the case of **Rallies** and **Classic Reliability Trials** the **Clerk** (or **Deputy)** must inspect the course and its installations. Any proposals to vary the staffing or equipment levels must receive specific written approval from the **Stewards of the Event** before the **Event** can commence.

g. To make arrangements with the **Event Secretary** to be satisfied and to satisfy the **Stewards** that all **Drivers, Co-Drivers** and **Entrants** are in possession of the appropriate **Competition Licences** / **Medical Certificates** and **Club Membership** cards. Except as provided for in **Part B App.1 Art.1.5** any **Competitor** who cannot produce the necessary documents to prove eligibility at an **Event** may not be allowed to start except with the agreement of the **Stewards** and on payment of the prescribed fee (**Ch.1 App.2**). In such cases the **Clerk of the Course** must ensure that the **Competitor** indemnities required in **Ch.3** have been signed.

h. Arrange for **Vehicles** to be routed to the **Scrutineering** area or **Parc Fermé** (as appropriate).

i. Ensure that every **Incident** involving a competing **Vehicle** is reported to the **Stewards of the Event** and the **Chief Scrutineer** and that the **Chief Medical Officer** is informed if any **Competitor** is injured. The **Competitor's Medical Certificate / Licence** must be returned to the **ASN** if the **Chief Medical Officer** considers it appropriate.

j. Ensure that any **Vehicle** which is to give a performance demonstration has been examined and approved by the **Chief Scrutineer** and that the **Driver** has 'signed- on'.

k. Ensure that every **Vehicle** carries the proper identification marking in accordance with the **Official Documents.**

l. Ensure that the correct **Driver** is in each **Vehicle** and marshal the **Vehicles** as necessary.

m. Send the **Vehicles** to the **Start Line** in the right order and personally start all races or delegate this responsibility to a competent **Official**.

n. Advise the **Stewards of the Event** any proposal to modify the programme.

o. Collect all relevant reports together with any other official information affecting the **Results.**

p. Prepare or arrange for the **Event Secretary** to provide the information necessary to enable the **Stewards of the Event** to complete their report to the **ASN.**

q. Relieve from duty any **Official** or **Marshal** who the **Medical Officer** considers as possibly unfit by reason of health, consumption of alcohol or drugs.

r. Ensure that any **Driver** of a **Parade** or **Safety Car** during a **Race** (n.b. not including the **Driver** of any **Vehicle** controlling a formation lap) is a suitably experienced **Circuit Driver** who should have or had previously held an appropriate **Competition Licence** (Ch.12 App.5) and in **Stage Rally** that one member of each **Safety Car** crew holds an appropriate **ASN Licence.**

s. Deal with any **Protests** from **Competitors** (Ch.2).

t. Sign **Competition Licence Upgrade Cards** (except in respect of **Short Circuit Kart Races** where the **Clerk of the Course** retains responsibility for **Judicial** duties and when the **ASN Steward** must sign the upgrade). As a guide the following conditions will need to be met before a signature is given:

   i. A **Driver** must perform satisfactorily at competitive speeds and must not receive any adverse reports regarding their driving

   ii. In races up to 10 laps the driver must be classified as a finisher. In some cases particularly where a **Race** includes several classes of widely differing performances a driver need not complete the full distance of the **Race**

   iii. In races over 10 laps the **Driver** must complete at least 10 laps

   iv. There must be at least 10 starters

   v. A high-speed **Trial** will qualify as a **Race** for the purposes of signing of **Upgrade Cards**

   vi. Not more than two signatures (one per **Race**) per **Driver** may be given at any one car **Race** or **Race Venue Kart Event**. Where authorised by the **ASN** a signature may be credited following a day marshalling.

   vii. If a **Clerk of the Course** refuses to sign an **Upgrade Card** a **Driver** concerned may **Appeal** to the **Stewards** as provided for in Ch.2**.**

   viii. For **Endurance Races** where a driver has satisfactorily completed at least one hour of driving time they may receive two signatures.

u. Notify the landowner and the Local Environmental Health Officer of any injury requiring overnight hospitalisation incurred during the **Event**.

v. Stop a **Race** in accordance with Ch.12**.**

w. Authorise the use of warning **Signals** when these are controlled from **Event Control** (Ch.10).

x. Additional duties and responsibilities can be detailed in the **Official Documents** of an **Event**.

2. Powers

2.1. Subject only to exceptions authorised by the **ASN** the **Clerk of the Course** acts as the sport's first judicial body where the **Event** is governed by the **NCR.**

2.2. Where an **Event** is governed by the **Code** then the **Clerk** may have specific penalty powers as provided by the **Official Documents** and / or the **Code.**

2.3. Other than those breaches reserved exclusively for the **National Court** (Ch.2 App.1) the **Clerk, (**or their **Deputy** except in very serious cases), has the power to impose penalties in accordance with Ch.2 (excluding **Suspension** and **Exclusion**) and the following:

a. Disqualify from the **Results** of **Practice** or **Competition** or prohibit from competing any **Competitor** or **Vehicle** that has been reported unsafe or ineligible.

b. Penalise any **Driver** reported for not complying with **Signals.**

c. Penalise any **Competitor** reported for being in contravention of the **NCR** or the **Official Documents.**

d. **Disqualifications** can be enforced either by displaying a **Black Signal** during a **Race** or after interview at the end of the **Competition** or **Practice.**

e. Penalise a **Competitor** found guilty of breaching driving standards regulations. This does not preclude the **Competitor** also being reported to the **Stewards of the Event** for further penalties under Ch.2**.**

f. Penalise any **Competitor** found guilty of abusive language or behaviour or physical assault or threat of physical assault. This does not preclude the **Competitor** also being reported to the **Stewards of the Event** for further penalties under Ch.2**.**

g. Impose a time, place or lap penalty in accordance with Ch.2**.** This regulation does not preclude such a **Competitor** being reported to the **Stewards** for further penalties.

h. Impose a **Fine** as detailed in Ch.1 App.2 on any **Competitor** who fails to attend or who reports late at a scheduled **Drivers'** briefing or on any **Driver** who has not raced at the **Circuit** before and who fails to report for a pre-**Practice** safety briefing.

i. For Circuit Racing Track limit infringements only (**Ch.12 App.7 Art.1.11.2**), to rescind an in-race Penalty awarded following Judge of Fact reports where onboard video, that has remained fully under the control of the Organisers and was not available during the Race, shows clearly that the judgement was flawed or provides evidence allowing for mitigation of the breach. Any such Decision must be documented.

2.4. All penalties imposed must be reported by the **Clerk of the Course** to the **Stewards of the Event** together with copies of the written **Decisions** provided and any supplementary information required by the **ASN.**

2.5. **Undertaking**s for the payment of **Fees** obtained by a **Clerk** must be handed to the **Stewards** for onward transmission to the **ASN**.

3. Licensing and Upgrade

3.1. **Application**s for a new **Clerk of the Course Licence** must be accompanied by a nomination from a **Club** which organises **Event**s within the appropriate discipline.

3.2. The **ASN** reserves the right to appoint candidates to any grade.

3.3. All licensed **Clerks of the Course** are required to attend at least two out of three consecutive training sessions as required by the **ASN** in order to maintain their grade(s).

3.4. In addition to the requirement of Art.3.3 above and for **Race** and **Kart** only to maintain an existing grade the applicant must have acted as **Clerk of the Course** or **Deputy Clerk of the Course** at three **Events** of that grade within 24 months. The period is as defined in the qualification period below.

4. Qualification Period

4.1. The twelve months qualification period will run from the 1 January to 31 December annually.

5. Regrading

5.1. **Clerk of the Course Licences** may be reviewed and regraded at the discretion of the **ASN**.

5.2. The review will take into consideration the applicant's experience and record of active participation.

6. Upgrading

6.1. **Application**s for upgrading must be supported in writing by a **Club** which organises **Events** within the appropriate discipline.

6.2. Refer to the individual disciplines within this Appendix for the relevant upgrading criteria.

6.3. Once all supporting documentation has been received the **ASN** may arrange for applicants to be assessed in the performance of their duties. The applicant must provide a list of proposed **Events** when applying to the **ASN** for upgrade.

6.4. The **ASN** may require applicants to take part in either a written or oral examination before the upgrading of any **Licence.**

7. Clerk of the Course Licence Grades

7.1. **Assistant**: May only work as an **Assistant Clerk of the Course**.

7.2. **Deputy**: May act as **Deputy / Assistant Clerk of the Course** up to and including **National** status **Events**.

7.3. **National**: May act as **Clerk of the Course** up to and including **National** status or as **Deputy / Assistant** to a higher-grade **Clerk of the Course** at **International Events**.

7.4. **International**: Only an **International Clerk of the Course** may take charge of an **International Event**.

8. Officiating Capacity

8.1. For exceptions to the definitions as detailed below refer to the individual criteria within this section. (See **Part A App.18 Chart 3**)

9. Definition of Deputy and Assistant Clerk of the Course

9.1. **Deputy Clerks of the Course** may act on behalf of the **Clerks of the Course** in their temporary or permanent absence or unavailability.

9.2. **Assistant Clerks of the Course** assist the **Clerks** in the performance of their duties but may not act on their behalf at any time.

9.3. All Assistant **Clerks of the Course** except for **Cross Country** or **Stage Rallies** or **Sprints** or **Hill Climbs** must be **Licensed.**

10. Race Clerk of the Course

10.1. In the case of all **Race Events** the **Clerk of the Course** must hold a **Clerk of the Course Licence** issued by the **ASN** and valid for the grade of **Event**.

10.2. There is no restriction on the maximum number of **Clerks of the Course** at any **Race Event** however one must be nominated as **Senior Clerk of the Course** responsible for the overall control of the **Event**.

10.3. Where a **Championship / Series** permanent **Clerk of the Course** is appointed then they must be the holder of a current **Clerk of the Course National Licence** as a minimum and they shall not be included in the above numbers.

10.4. The maximum number of **Deputy / Assistant Clerks of the Course** for any **Race Event** shall be two (except at **International Events).**

10.5. The following conditions will need to be met before the **Clerk of the Course Licence** can be endorsed and signed by the **ASN Steward** in respect of upgrading or retention.

a. The **Clerk of the Course** must present their **Officials Licence** at the start of the day.

b. The **Licence** must not have been pre-completed by the **Clerk.**

10.6. The **Clerk of the Course** must be on duty throughout the day if they are present only as a permanent **Clerk** of a **Championship** they will not be granted a signature. The **Senior Clerk** must provide a review to the **Steward** of the individual's performance throughout the day which should include:

a. What duties were performed and the quality of their performance.

b. That the **Clerk** has presented satisfactory communication skills which did not exacerbate situations.

c. That he/she has satisfactorily dealt with **Judicial** matters which may include **Judicial** hearings.

d. The status of all the **Race(s)** clerked should be recorded i.e. not necessarily highest status of **Event.**

10.7. If the **Clerk of the Course** is the **Senior Clerk** for the **Event** then they must have remained on duty throughout the day and satisfactorily managed the running of the **Event** including liaising with **Competitors** and fellow **Officials.**

11. Officiating Capacity

11.1. This is as detailed above with the following exceptions:

11.2. **International Clerk of the Course**: Only an **International Clerk of the Course** may take charge of a **British Championship Race.** An application for an **International Clerk of the Course** to take charge of an **FIA Championship Race** must be submitted by the **Race** organising **Club** and will be considered by the **ASN** on an individual and annual basis.

11.3. To be eligible to be named a permanent **Clerk of the Course** for a **Race Championship** registered with the **ASN** the Clerk must be the holder of a current **Clerk of the Course National** licence as a minimum.

11.4. A **Race National Clerk of the Course** may take charge of a **Hot Lap Challenge Event** with prior specific authorisation from the **ASN**. Support from the Organising **Club** is also required together with evidence of discipline familiarisation.

12. Upgrading

12.1. **Assistant to Deputy Race**: An applicant wishing to upgrade to **Deputy** must satisfactorily complete the **Clerk of the Course** modular training programme.

12.2. **Deputy** to **National**: Applicants must have received signatures from a **ASN Steward** for acting satisfactorily as **Deputy Clerk of the Course** at 9 **Club** or **National** and must include at least three **National Events** over a period of not less than 12 months and not more than 36 months immediately preceding the application to upgrade and at a minimum of two **Venues**. In addition they must have attended at least one **ASN Clerk of the Course** seminar during the upgrading period.

12.3. **National** to **International**: Applicants must have received signatures from a **ASN Steward** for acting satisfactorily as **Deputy Clerk of the Course** for the **International** element of six **International Race Events** over a period of not less than 12 months and not more than 36 months immediately preceding the application to upgrade and at a minimum of three **Venues.**

12.4. **Application**s for upgrading to **International** must be justified to **ASN** by a **Race** organising **Club**. Applicants must have **National Clerk of the Course** status with extensive experience and may be required to attend an **Appointments Panel**. Any **International Licence** once authorised will only be issued for the calendar year and on an appointment basis.

13. Sprint or Hill Climb Clerk of the Course

13.1. For **Sprints** or **Hill Climbs** the **Clerk of the Course** must hold a **Licence** issued by **ASN** and valid for the grade of **Event**.

13.2. At all **National** and higher status **Events** there should be at least one but not more than two licensed **Deputy/Assistant Clerks of the Course** in addition to the **Clerk of the Course**.

13.3. At all other **Events** it is recommended that there should be at least one but not more than two **Deputy / Assistant Clerks of the Course** in addition to the **Clerk of the Course**.

14. Officiating Capacity

14.1. **International**: Only an **International Clerk of the Course** can take charge of an **FIA Championship Event**. Their name must be submitted by the **Race Organising Club** and will be considered by **ASN** on an individual basis.

14.2. A **Speed National Clerk of the Course** may take charge of a **Hot Lap Challenge Event** with prior specific authorisation from the **ASN**. Support from the Organising **Club** is also required together with evidence of discipline familiarisation.

15. Upgrading

15.1. **Assistant to Deputy**: Applicants must follow the **Clerk of the Course** modular training programme.

15.2. **Deputy** to **National**:

a. Applicants must have received signatures from an **ASN Steward** at a minimum of six **Hill Climbs** or **Sprints** at which they have officiated satisfactorily as **Deputy Clerk of the Course**.

b. All signatures must have been obtained over a period of not less than 12 months and not more than 36 months immediately preceding the application to upgrade and at a minimum of two **Venues.**

c. Applicants must have attended at least one **ASN Clerk of the Course** seminar during the upgrading period.

15.3. **National** to **International**:

a. **Application**s for upgrading to **International** must be justified to the **ASN** by an **Organising Club**.

b. Applicants may be required to attend an **Appointments Panel.**

c. **Application**s will only be accepted from **National Clerks of the Course** with extensive experience.

d. Any **International Licence** once authorised will only be issued for the calendar year and on an appointment basis.

16. Rallycross Clerk of the Course

16.1. In the case of all **Rallycross Events** the **Clerk of the Course** must hold a **Clerk of the Course Licence** issued by **ASN** and valid for the grade of **Event**.

17. Officiating Capacity

17.1. As detailed above with the exception to the following:

a. **International**: Only an **International** A grade **Rallycross Clerk of the Course** may take charge of the **Rallycross Grand Prix. Application**s for an **International** Rallycross **Clerk of the Course** to take charge at an **FIA Rallycross Championship Event** must be submitted by the **Organising Club** and will be considered by **ASN** on an individual basis. Any **International Licence** once authorised will only be issued for the calendar year in which it is authorised and on an appointment basis.

18. Upgrading

18.1. **Assistant** to **Deputy**:

a. An applicant wishing to upgrade to **Deputy** must follow the **Clerk of the Course** modular training programme.

18.2. **Deputy** to **National**:

a. Applicants must have received signatures from an **ASN Steward** at a minimum of three **Rallycross**

Events at which they have officiated satisfactorily as **Deputy Clerk of the Course** and at least one of which must be a **National Rallycross Event**.

b. All signatures must have been obtained over a period of not less than 12 months and not more than 36 months immediately preceding the application to upgrade and at a minimum of two **Venues.**

c. Applicants must have attended at least one **ASN Clerk of the Course** seminar during the upgrading period.

18.3. **National** to **International**:

a. Applicants must have received signatures from an **ASN Steward** at a minimum of two **National Rallycross Events** at which they have officiated satisfactorily as **Clerk of the Course** and have acted as **Deputy Clerk of the Course** at two **International Rallycross Events** over a period of 36 months.

b. An application for upgrading to **International** must be justified to the **ASN** by an **Organising Club**.

c. Applicants may be required to attend an **Appointments Panel.**

d. Any **International Licence** once authorised will only be issued for the calendar year in which it is authorised and on an appointment basis.

19. Stage Rally Clerk of the Course

19.1. All **Special Stage Rally Clerks of the Course** are expected to attend at least two out of three consecutive **ASN Clerk of the Course** seminars for which they are eligible.

19.2. **The ASN** may require applicants to take part in a written or oral examination before the upgrading of any **Licence.**

19.3. All names on the **ASN Clerk of the Course** list will be reviewed annually and may be re-graded.

19.4. Only **Clubs** who organise **Special Stage Rallies** may submit a nomination for an **Assistants Licence**. An applicant's previous motor sporting experience will be considered.

20. Officiating Capacity

20.1. As detailed above with the following exceptions:

20.2. **National**: May act as **Clerk of the Course** at **Special Stage Rallies** up to and including **National** status.

20.3. **SVSR National**: May only act as **Clerk of the Course** at **Single Venue Stage Rallies** up to and including **National** status.

20.4. **International**: May act as **Clerk of the Course** at all categories of **Special Stage Rally**.

21. Upgrading

21.1. **Assistant** to **Deputy:** An applicant must follow the **Clerk of the Course** modular training programme.

21.2. **Deputy** to **National**:

a. Applicants must produce signatures on their **Licences** from a **Clerk of the Course** showing that they have officiated as a **Deputy Clerk of the Course** at a minimum of one **Multi-Venue Stage Rally Event** within the preceding 12 months.

b. A holder of the restricted **SVSR** only **National Stage Rally Clerk of the Course Licence** may apply for the unrestricted **Licence** having satisfied the requirements of **Art.21.2.a and d.**

c. An applicant may request a restricted **Single Venue Only National Stage Rally Clerk of the Course Licence** having produced a signature showing that they have officiated as a **Deputy Clerk of the Course** at a minimum of one **Single Venue Stage Rally** within the preceding 12 months.

d. Applicants must also be nominated by their **Club Committee** and have attended at least one **ASN Clerk of the Course** training session during the upgrading period in addition to having followed Appendix 1 of the **Clerk of the Course** modular training program.

21.3. **National** to **International**:

a. An application for upgrading to **International** will only be considered from holders of the unrestricted **National Stage Rally Clerk of the Course Licence** and must be justified to **ASN** by an **Organising Club**.

b. **Application**s will only be accepted from **National Clerks** with extensive experience who may be required to appear before an **Appointments Panel.**

c. Any **International Licence** once authorised will only be issued for the calendar year in which is authorised and on an appointment basis.

22. <u>Cross Country Clerk of the Course</u>

22.1. The **Clerk of the Course** for a **Competitive Safari Hill Rally** or **Baja** of **National** status or above must hold a valid **Clerk of the Course Licence** issued by the **ASN** valid for that grade of **Event**.

23. Officiating Capacity

23.1. As detailed above with the following exceptions:

23.2. **National**: May act as **Clerk of the Course** at **Competitive Safaris** or **Hill Rallies** up to and including **National**.

23.3. **International**: May act as **Clerk of the Course** at all categories of **Competitive Safari Hill Rally** or **Baja.**

24. First time applications – Assistant

24.1. Only **Clubs** that organise **Competitive Safaris** and / or **Hill Rallies** may submit a nomination for an **Assistant Licence.** An applicant's previous motor sporting experience will be considered.

24.2. **Assistant** to **Deputy:** An applicant must follow the **Clerk of the Course** modular training programme.

25. Upgrading

25.1. **Deputy** to **National**:

a. Applicants must produce signatures on their **Licences** from a **Clerk of the Course** showing that they have officiated satisfactorily as an **Deputy Clerk of the Course** at a minimum of one **Competitive Safari** or **Hill Rally Event** within the preceding 12 months.

b. Applicants must also be nominated by their **Club Committee** and must have attended at least one **ASN Clerk of the Course** seminar during upgrading period.

25.2. Upgrading to **International**:

a. An application for upgrading to **International** must be justified to **ASN** by an **Organising Club**.

b. **Application**s will only be accepted from **National Clerks of the Course** with extensive experience who may be required to appear before an **Appointments Panel.**

c. Any **International Licence** once authorised will only be issued for the calendar year in which is it authorised and on an appointment basis.

26. <u>Kart Clerk of the Course</u>

26.1. In the case of all **Kart Events** the **Clerk of the Course** must hold a **Clerk of the Course Licence** issued by the **ASN** and valid for the grade of **Event**.

26.2. The maximum number of **Clerks of the Course** at any **Kart Event** shall be two. One **Clerk of the Course** must be nominated as **Senior Clerk of the Course** responsible for the overall control of the **Event**.

26.3. Where a **Championship/Series** permanent **Clerk of the Course** is appointed then they are not included in the above numbers.

26.4. The maximum number of **Deputy/Assistant Clerks of the Course** for any **Kart Event** shall be two (except at **International Events**).

27. Officiating Capacity

27.1. As detailed above with the exception to the following:

27.2. **Super K-X:** May act as **Clerk of the Course** at **Super K-X Kart Events** only.

27.3. **International**: An application for an **International Clerk of the Course** to take charge of a **CIK-FIA Championship Race** must be submitted by the **Organising Club** and will be considered by the **ASN** on an individual basis and will only be issued for the year in which it is authorised.

28. Upgrading

28.1. **Assistant** to **Deputy**: An applicant must follow the **Clerk of the Course** modular training programme.

28.2. **Deputy** to **National**:

a. Applicants must have received signatures from an **ASN Steward** for acting satisfactorily as a **Deputy Clerk of the Course** at six **Kart Events**. All signatures must have been obtained over a period of not less than 12 months and not more than 36 months immediately preceding the application to upgrade and at a minimum of two **Venues.**

OR

b. When it has been less than 12 months since the previous upgrade, applicants must have received signatures from an ASN Steward for acting satisfactorily as a Deputy Clerk of the Course at ten Kart Events at a minimum of two Venues.

c. All Applicants must have attended at least one ASN Clerk of the Course seminar during the upgrading period. The signatures must be obtained in not less than 12 months and not more than 36 months.

28.3. **National** to **International**:

a. Applicants must have been **National Kart Clerks of the Course** for a minimum of three years and have received signatures from an **ASN Steward** for acting satisfactorily as a **Clerk of the Course** at six **National Kart Events** and as **Deputy Clerk of the Course** at two **International Kart Events**.

b. All signatures must have been obtained over a period of not less than 12 months and not more than 36 months immediately preceding the application to upgrade and at a minimum of three **Venues.**

c. Applicants must have attended at least one **ASN Clerk of the Course** seminar during the upgrading period.

d. An application for upgrading to **International** must be justified to **ASN** by an **Organising Club** and applicants may be required to attend an **Appointments Panel**.

e. Any **International Licence** once authorised will only be issued for the calendar year in which it is authorised and on an appointment basis.

29. Road Rally Clerk of the Course

29.1. The Clerk of the Course for a Rallying Road, Rallying Road Timed, and Rallying Navigational Permitted Event ('Road Rally Clerk of the Course') must hold a valid Clerk of the Course Licence issued by the ASN valid for that grade of Event.

29.2. A Deputy Road Rally Clerk of the Course must hold a valid Clerk of the Course Licence issued by the ASN valid for that grade of Event.

29.3. An Assistant Road Rally Clerk of the Course must hold a valid Assistant Clerk of the Course Licence issued by the ASN valid for that grade of Event.

29.4. The maximum number of Road Rally Clerks of the Course at any Rallying Road, Rallying Road Timed, and Rally Navigation Permitted Event shall be one excluding any Deputies or Assistants. The Clerk of the Course must be nominated as the Senior Clerk of the Course responsible for the overall control of the Event.

29.5. All names on the ASN Road Rally Clerk of the Course list will be reviewed annually and may be re-graded.

30. Officiating Capacity

30.1. As detailed above and in accordance with Ch.5 but with the following exceptions:

30.2. Assistant Road Rally Clerk of the Course: May act as Assistant Clerk of the Course at Road Rallies up to and including Interclub status.

30.3. Road Rally Clerk of the Course: May act as a Clerk of the Course or Deputy Clerk of the Course at all categories of Road Rally.

31. First time applications – Assistant

31.1. Only Clubs who organise Road Rallies may submit a nomination for an Assistant Road Rally Clerk of the Course Licence. An applicant's previous motorsport experience will be considered at the ASN's discretion.

31.2. The ASN requires all applicants to undertake training before the issuing of an Assistant Road Rally Clerk of the Course Licence.

31.3. The ASN may require applicants to take part in a written or oral examination before the issuing of an Assistant Road Rally Clerk of the Course Licence.

32. Upgrading

32.1. Assistant to Road Rally Clerk of the Course

a. An applicant must follow the Road Rally Clerk of the Course modular training programme.

b. Only Clubs who organise Road Rallies may submit a nomination for an upgrade of an Assistant Road Rally Clerk of the Course Licence.

c. The ASN may require applicants to take part in a written or oral examination before the issuing of a Road Rally Clerk of the Course Licence.

33. Grade maintenance

33.1. All Road Rally Clerks of the Course are expected to attend at least two out of three consecutive ASN Clerk of the Course seminars for which they are eligible.

33.2. The ASN may require Road Rally Clerks of the Course to take part in a written or oral examination before the re-issuing of their Licence each calendar year.

CHAPTER 5 OFFICIALS - PART A

Appendix 6 - Technical Commissioners, Technical Officials including Scrutineers, Eligibility and Environmental Scrutineers

Note: Training provisions are provided at **Art.10**

General

- The duties and responsibilities of all **Officials** are detailed in **Ch.5**.
- The relevant general provisions of **Part A App.2 to this Chapter** apply together with the specific obligations in this Appendix.

1. Technical Commission

1.1. **Codes of Practice** are provided for both **Technical Commissioners** and **Eligibility Scrutineers**. **Technical Commissioners** and licensed **Eligibility Scrutineers** are considered members of the **Technical Commission.**

1.2. **Technical Commissioners** when checking the eligibility of **Vehicles** for compliance with any T**echnical Regulations** or undertaking any measurements or examinations required should use approved equipment having a **Certificate of Conformity** and relevant processes to traceable standard(s).

1.3. Provisions relating to **Eligibility Scrutineers** are at **Art.5 of this Appendix**.

1.4. Details of **Technical Commissioners** can be found **below.**

2. Technical Officials

2.1. **Technical Officials** are appointed by the **Organisers** and shall hold the relevant **ASN Licence** (except for **Interclub** or **Clubman** non-speed competitions where this requirement only applies if specifically imposed on the **ASN Organising Permit). Annual Training** is required herein.

2.2. All **Special Stage Rallies** must have an **ASN** licensed **Scrutineer**.

2.3. The **Chief Scrutineer** is responsible for the appointment and conditions of appointment of staff.

2.4. The **Organising Club** must provide all necessary information and is responsible for meeting all approved costs of the **Officials** and for providing adequate facilities for them to carry out their duties.

2.5. The **Chief Scrutineer** can engage and deploy other suitably experienced **Assistants / Deputies** but lay assistants cannot give final approval for the participation of any **Vehicle**.

2.6. **Scrutineers** are responsible for checking the mechanical state of **Vehicles** both in regard to compliance with all **Regulations** and in the interests of safety.

2.7. There must be a **Chief Scrutineer** present at all **Events** and not less than one **Scrutineer** for every 45 **Vehicles** entered for the **Event.**

2.8. All **Scrutineer**s must report to the **Chief Scrutineer** at the start of an **Event.**

2.9. The **Chief Scrutineer** can be nominated by the **ASN** who may also appoint other **Officials** for specific duties in connection with **Vehicle** eligibility. In other instances the **Organiser** is responsible for appointing these **Officials.**

2.10. The time allowed for scrutiny shall be such that no more than 10 **Vehicles** per hour are required to be examined per **Scrutineer**.

2.11. **Scrutineer**s will signify acceptance of a **Vehicle** that has been examined by issuing a label showing details of the **Event.**

2.12. For **ASN Scrutineers** the label must bear the **ASN** logo.

2.13. The label must be attached to the **Vehicle** for the duration of the **Event.**

2.14. When a **Scrutineer** rejects a **Vehicle** the relevant details must be put in writing with a copy timed and signed by the **Competitor** retained by the **Scrutineer**.

2.15. **Technical Commissioners** and **Scrutineers** are permitted to instruct a **Competitor** to remedy any defect and to re-present the **Vehicle** for re-examination before proceeding in accordance with **Art.2.14 above.**

2.16. At all **Events** the **Chief Scrutineer** must supply a written report to the **Clerk of the Course** covering all **Vehicles** examined giving reasons for any rejections.

2.17. **ASN** appointed **Scrutineers** and **Technical Commissioners** must report any findings to the **Chief Scrutineer** and **Clerk of the Course** with a copy direct to the **ASN**.

3. Scrutineers shall:

a. Make inspections at any time at the request of the **Organiser**s, the **ASN**, the **Clerk of the Course, Chief Scrutineer** or **Technical Commissioner.**

b. Use only such measuring instruments as may be specified by the **ASN**.

c. Communicate official information only to the **Clerk of the Course**, the **Stewards of the Event** or the **ASN**.

d. Prepare and sign the reports of their inspections and pass them to the **Clerk of the Course** and the **ASN** as appropriate.

e. Attend two out of three annual **ASN Training Events** to maintain their appointment

3.1. The **Chief Scrutineer** (and any **Deputy)** shall remain on duty throughout an **Event.**

3.2. Every **Scrutineer** responsible for approving a **Vehicle** shall remain on duty until that **Vehicle** has completed the **Competition** (including any post-**Competition Scrutineering** periods) or until released by the **Chief Scrutineer**.

3.3. The **Official Documents** for **Events** or **International Events** being run to Appendix J of **the FIA's International Sporting Code** will require the **Entrant** to have available a copy of the **Homologation Papers** appropriate to the type of **Vehicle** participating.

4. Scrutineers Groups

4.1. **Chief Scrutineers** can instruct **Trainee Scrutineers** to assist as part of their on-the-job training. **Scrutineers** are authorised to approve or reject **Vehicles** and can assist more senior grades at any **Event.**

4.2. **National Scrutineers** can take charge of **Scrutineer**ing at **Events** up to **National** status.

4.3. **International Scrutineers** can take charge of **Scrutineering** at any type of **Event** up to **International** status including **FIA Championship Events.**

5. Eligibility Scrutineers

5.1. **Eligibility Scrutineer**s must be licensed **Scrutineers** and must always work in conjunction with the **Chief Scrutineer** or **Technical Commissioner** regarding **Judgements of Fact.**

5.2. If required to undertake measurements that require stripping of a **Vehicle** they must be licensed to do so. Measurements which can be performed without stripping may be undertaken by a licensed **Scrutineer**.

5.3. **Eligibility Scrutineers** appointed to **International Rallies** can carry out, or request to be carried out any stripping and dismantling that may be needed.

6. Environmental Scrutineers

6.1. **Environmental Scrutineers'** main function is to check noise levels of all **Vehicles** (including **Safety Cars** where applicable and **Course Cars**) at **Scrutineering** and during the **Event** and report excessive levels to the **Clerk of the Course**.

6.2. To assist **Owners** and **Organisers** the **ASN** has set up an Auditing Inspectorate of Environmental Inspectors who are licensed to attend **Events** and carry out measurements in conformity with **Ch.7.**

6.3. **Environmental Scrutineers** may bar **Safety Cars** where applicable and **Course Cars** from an **Event.**

6.4. **Organisers** shall liaise with the landowners as appropriate.

6.5. No **Protest** or **Appeal** can be made against the decision of an **Environmental Scrutineer.**

6.6. The name of the **Environmental Scrutineer** should either be given in the **Final Instructions** or posted on an **Official Notice Board** at signing-on before the start of **Scrutineering.**

6.7. **Environmental Scrutineers** must provide a full written report to the **Clerk of the Course** as soon as possible before publication of provisional results.

6.8. Details of any penalty applied by the **Environmental Scrutineer** must be included in the published results.

6.9. The **Official Documents** for the **Event** must carry a reminder that a sound test will be carried out.

6.10. The minimum requirements for **Sound Meter Standards** are as follows:

a. Type 1 or 2 Instrument (to be calibrated regularly)

b. International Standard IEC 651, IEC 60651 or IEC 61672 - 2013

c. British Standard BS 5969

d. Range 70–120 dB(A)

e. Weighting 'A'

f. Time Constants Fast/Slow

g. Maximum 'Hold' recommended

h. Calibrators to comply with BSEN or IEC 60942 Class 2.

7. Rally Specific Provisions

7.1. All **Environmental Scrutineers** have the authority to refuse a start or withhold **Time Cards** or route information where **Competitors** are considered to have made excessive noise but this must be reported to the **Clerk of the Course.**

7.2. Before the start of a **Rally** a **Sound Test** must be conducted in accordance with Ch.7 using either the 0.5m or 2.0m test as decided by the **Environmental Scrutineer.**

7.3. **Road Rallies** should use the 2.0m test wherever possible.

8. Technical Officials

9. Qualification

9.1. The organisation chart at the end of this Appendix indicates the age experience and qualifications required.

9.2. The minimum time may be reduced dependent upon number of **Events** attended and the qualifications suitability and aptitude of the individual.

10. Training

10.1. **ASN** has established formal training schemes for those wishing to become Licensed **Technical Officials** (including Environmental **Scrutineer**s).

10.2. Prospective trainees (who must be over 16) and Licensed **Technical Officials** wishing to become **Eligibility Scrutineers** should contact the **Technical Department** at **ASN** who will identify the most suitable contact to provide one-to-one training and instruction and make the arrangements for the following twelve months' training period.

10.3. It is a requirement that all **Scrutineer**s attend two out of three annual Seminars to maintain their appointment. **Super K-X Scrutineers** are subject to separate grade maintenance criteria outlined within **ASN** issued guidance.

10.4. All appointments are reviewed annually by the **ASN**.

10.5. The **ASN** may reduce the minimum requirements dependent upon the number of **Events** attended, qualifications, suitability, aptitude and geographical location.

10.6. If a **Scrutineer** does not undertake the duties associated with their grade or fails to maintain the required standard they may not necessarily be reappointed to the same grade the following year.

10.7. For **Kart Scrutineers** requiring signatures for **Chief Scrutineer** status signatures must be provided by the **ASN Steward of the Event.**

11. Upgrading and Maintenance

11.1. Candidates for **Scrutineer** grade will be appointed from **Trainee Scrutineers.** Candidates will be required to submit to the **ASN** with their application all completed training modules and a CV and letters of recommendation from Licensed **Scrutineers** including a **Chief Scrutineer**.

11.2. The outline requirements for further upgrading are shown in the **Organisation Chart** at the end of this Appendix; full details are available from the **ASN**.

11.3. At every stage of the upgrading process an important requirement will be the recommendations of at least two **Scrutineers** (one of whom must be a **Chief Scrutineer**) who will have been collecting data on attendances, performance, potential, commitment, preferences and suitability for the various categories.

12. Trainee Scrutineer to Scrutineer

12.1. **Application**s must be 18 or over and their application must include the following:

12.2. Attendance at an annual **ASN Technical Training Event.**

12.3. A letter of recommendation to upgrade from their mentor / trainer.

12.4. Successful completion of training modules one and two.

13. Scrutineer to National Scrutineer

13.1. **Application**s for upgrading must be made in writing directly to the **ASN Technical Department.**

13.2. Applicants must have acted as **Scrutineer** at a minimum of twenty **Events** and held a full **Scrutineer** licence for a minimum of 24 months.

13.3. The relevant training module booklet must be completed.

13.4. Applicants must be assessed in person at two **Events** by two different **Assessor Scrutineers** appointed by the **ASN Technical Department.**

14. Technical Officials' Expenses

14.1. The total costs for the provision of **Technical Officials** at an **Event** are a matter for negotiation and prior agreement between the **Organising Club** and the **Chief Scrutineer** or **Official** in charge of the technical team. For guidance only the **Technical Advisory Panel** has recommended maximum daily expense and travel rates available from the **ASN Technical Department**.

14.2. For guidance only, the **Technical Committee** has recommended a maximum daily expense rate of £50 and 45 pence a mile for travel. **Officials** are reminded of their obligation to disclose fees earned from motor sports activities to the HMRC and to account for tax where necessary.

14.3. Advice on any potential tax liabilities should be available from their local tax office. The specific reimbursement of actual costs should not create a tax liability and individuals falling solely within this category and not receiving any fees need not report them on their annual tax return.

15. International Scrutineer/Environmental Inspector/Technical Commissioner/Assessor Scrutineer

15.1. These grades are by appointment of the **ASN Appointments Panel** only. **Application**s for these grades should be submitted in the first instance to the **Technical Department** at the **ASN**.

APPOINTED TECHNICAL COMMISSIONERS

Scrutineer Car Technical Commissioner

Colin Barnett
29 Offas Green, Norton, Presteigne LD8 2NX
☎ 07768 987007 ✉ clutchslip@gmail.com

Robert Bassett
23 Hughes Close, Harvington, Worcestershire WR11 8NZ
☎ 07778 142305 ✉ bassettrs@lineone.net

Philip Danbury
13 Birkdale Close, Bletchley, Milton Keynes MK3 7RF
☎ 07768 797757 ✉ pmdanbury@aol.com

Geoff Doe
The Willows, Whitchurch Road, Newhall, Cheshire CW5 8DJ
☎ 07808 129663 ✉ geoff@doemotorsport.com

William Greig
53 Cupar Road, Kingskettle, Kettlebridge, Fife. KY15 7QD
☎ 07703 436023 ✉ williegreigtc@hotmail.com

Mike Harris
19 Dawn Close, Ness, Neston, Cheshire CH64 4DS
☎ 07710 496018 ✉ mikeharris.scrut@talktalk.net

Paul Hewer
1 Farnsworth Street, Chesterfield, Derbyshire S41 0PD
☎ 07960 898234 ✉ scrutineer@btinternet.com

John Hopwood
Clough End Farm, Sandhill Lane, Stockport SK6 5NP
☎ 07710 253 907 ✉ jchmotorsport@btinternet.com

Nigel Jones
49 The Chase, Eastcote, PINNER, Middlesex HA5 1SH
☎ 07802 276590 ✉ njones6942@aol.com

Paul Loveridge
103 Woodside Street, Cinderford, Gloucestershire GL14 2NS
☎ 07831 656472 ✉ paul@plmotorsport.co.uk

Robert Mason
44 Southfields, Bourne, Lincs PE10 9TZ
☎ 07895344045 ✉ rpm1991@hotmail.co.uk

Robert McDonald
Riverside, 2a School Green, Lasswade, Midlothian EH18 1NB
☎ 07774 692679 ✉ rabjmcdonald@gmail.com

Stephen Prior
63 Glebe Road, Deanshanger, Milton Keynes MK19 6LS
☎ 07763 824161 ✉ priorsteve@hotmail.com

Roger Ratley
Hunters Lodge, Post Office Road, Maldon, Essex CM9 6SX
☎ 07764 985937 ✉ rogerratley@gmail.com

Peter Riches
The Willows, Low Common, Wymondham, Norfolk NR18 9DZ
☎ 07916 126448 ✉ richesst@aol.com

Sam Riches
6 Ripley Close, Kingsmead, Milton Keynes MK4 4HJ
☎ 07803 966706 ✉ samriches@aol.com

Scrutineer Kart Technical Commissioner

Paul Klaassen
51 Trenance Road, Exhall, Coventry CV7 9FJ
✉ klaassen632@hotmail.com

Ernest Salmon
207 Stradishall Road, SUDBURY, Suffolk CO10 8EU
☎ 07866 769377 ✉ ernie1954@sky.com

APPOINTED ENVIRONMENT INSPECTORS

Alan Blissett
22 Riding Hill, SOUTH CROYDON CR2 9LN
☎ 07779 509055 ✉ alangela@btinternet.com

Peter Clingan
16 Mossvale, Lochmaben, Lockerbie DG11 1QB
☎ 07742572635 ✉ peterclingan@yahoo.com

CHAPTER 5 OFFICIALS - PART A

Appendix 7 - Timekeepers and Handicappers

1. General

1.1. The duties and responsibilities of all **Officials** are detailed in **Ch.5.**

1.2. The relevant general provisions of **Part A App.2 to this Chapter** apply together with the specific obligations in this Appendix.

1.3. **Timekeepers** and **Handicappers** are appointed and licensed annually by the **ASN** and are subject to an annual review of their ability experience and record of active participation and their appointment can be revoked at any time.

1.4. They must have no connection with any trader or manufacturer who might benefit in any way from the result of any **Competition** at which they officiate.

1.5. **Timekeepers** can only officiate in accordance with their appointed grade and using the appropriate certified equipment and procedures relevant to a particular **Event.**

1.6. The **Chief Timekeeper** is responsible for the appointment and conditions of appointment of timekeeping staff and may employ other suitably experienced assistants.

1.7. The **Organising Club** must provide all necessary information and is responsible for meeting all approved costs of the **Officials** and for providing adequate facilities for them to carry out their duties.

1.8. The minimum permitted grade of **Timekeeper** in charge at any **Event** is given in **Part A App.18 Chart 5.**

2. Handicapper

2.1. A **Handicapper** is a person licensed by the **ASN** responsible for the assessment of **Handicap**s to be applied to a **Competition.**

2.2. After entries have closed the **Handicapper** shall prepare the **Handicaps** in accordance with the **Official Documents** which must state if any **Handicap** is to be varied following a performance made in a previous **Competition** at the same **Event.**

2.3. In the case of a **Handicap** race where the **Handicap** is applied at the start the starter must be a **Timekeeper.**

3. Timekeepers

3.1. **Timekeepers** must be capable of meeting the requirements of their grade.

3.2. The **ASN** reserves the right to revoke an appointment at any time (**Part A App.18 Chart 5**).

3.3. Initial application for appointment must be made on the **Officials' Licence Application Form** available from the **ASN** accompanied where appropriate by a recommendation from the **Club** or **Timekeeper** for whom the applicant has carried out duties.

4. Newly appointed Timekeepers must commence at a Trainee grade however a higher-grade appointment may be given to suitably qualified applicants at the discretion of the ASN.

4.1. For persons with no previous experience or recommendation their application must be forwarded to the **ASN** who will arrange a training programme with a suitable mentor.

4.2. Each **Trainee** will be provided with a **Timekeeper Training Log Book.**

5. Upgrading

5.1. Subject to prior arrangement with the **Chief Timekeeper** of an **Event** new **Timekeepers** are encouraged to attend observe and assist at all types of **Event** with a view to eventual upgrading.

5.2. Specific upgrading requirements are available from the **ASN.**

6. Licence Grades Race

6.1. **International Race:** may take charge at all **Race Events.**

6.2. **National Race:** may take charge of all **Race Events** up to and including **National** status.

6.3. **Timekeeper Race**: under the direction of the **Chief Timekeeper** may carry out the duties required to time the **Competitors** at **Race Events.**

7. Kart

7.1. **International Kart**: may take charge at all **Kart Race Events**

7.2. **National Kart**: may take charge at all **Kart Race Events** up to and including **National** status.

7.3. **Timekeeper Kart**: may take charge at all **Kart Race Events** up to and including **Interclub** status.

8. Speed

8.1. **International Speed**: may take charge at all **Speed Events** and World Record attempts.

8.2. **National Speed**: may take charge at all **Speed Events** up to and including **National** and **National** Record attempts.

8.3. **Timekeeper Speed**: may take charge at **Clubman Speed Events.**

9. Rally

9.1. **International Rally**: may take charge at all **Rallies** up to and including **International.**

9.2. **National Rally:** may take charge at all **Rallies** up to and including **National** status.

9.3. **Rally Timekeeper**: may take charge at **Single Venue Rallies** up to and including **Interclub** status.

10. Assistant/Trainee

10.1. **Assistants** shall be competent in at least one recognised **Timekeeping** function. **Trainees** are in training to become **Timekeepers**.

11. Timekeeping Officials' Expenses

11.1. The total cost of the provision of **Timekeeping** services is a matter for agreement between the **Organising Club** and the **Chief Timekeeper** or **Official** in charge of the **Timekeeping** team.

11.2. For guidance only, the **Timekeeping Committee** has recommended a maximum daily expense rate of £50 and 45 pence a mile for travel. **Officials** are reminded of their obligation to disclose fees earned from motor sports activities to the HMRC and to account for tax where necessary.

Advice on any potential tax liabilities should be available from their local tax office. The specific reimbursement of actual costs should not create a tax liability and individuals falling solely within this category and not receiving any fees need not report them on their annual tax return.

12. Duties of Timekeepers

12.1. The principal duties of **Timekeepers** are to:

a. **Report** personally to the **Chief Timekeeper** at the start of an **Event**

b. Use appropriate certified equipment for the type and status of **Event** and for the authenticity of the **Results** produced.

c. Register appropriate times for the **Competition** and any other times required by the **Clerk of the Course** sign the timing reports and pass them to the **Chief Timekeeper.**

d. Send their original time records to the **Clerk of the Course,** the **Stewards of the Event** or the **ASN** if requested.

e. Communicate any times or results only to the **Clerk of the Course,** the **Stewards of the Event** or in accordance with their instructions.

f. In the case of a record attempt prepare and sign a report relating to timing and send it with all necessary supporting documents to the **Stewards of the Event** (and to the **ASN**).

g. Act as **Judge of Fact** in respect of timing matters at **Race** and **Speed Events.**

12.2. If there is no appointed **Chief Timekeeper** at **Kart Race Events** the **Chief Lap Scorer** will be a **Judge of Fact** in respect of laps completed and finishing order.

At **Speed Events** unless appointed as the **Course Controller Timekeepers** must NOT accept responsibility for ensuring the **Course** is clear so as to permit the next **Competitor** to start.

12.3. The **Timekeeper** shall notify the **Course Controller** when the **Timekeeper** is ready for the next **Competitor.**

13. Timing Requirements

13.1. Except as provided by specific **NCR** times recorded using manually operated equipment should be rounded to the nearest 0.1 of a second.

13.2. The accuracy of automatically operated equipment will be as classified.

13.3. Where times are not to be published speeds should be given to the nearest mile per hour and no minimum standard of equipment applies.

13.4. When calculating average speeds the result should be consistent with the accuracy of time and distance measured and must be rounded down at all times.

14. Standing Start Speed Events:

14.1. **For Hill Climbs and Sprints** timing shall be in accordance with the provisions of **Ch.14.**

14.2. **For Hill Climbs Sprints and Record** attempts the **Chief Timekeeper** will arrange for an appointed **Timekeeper** to be positioned at the start line to ensure that each vehicle is correctly aligned before being permitted to start.

14.3. Where timing is actuated by a light beam only **Vehicles** fitted with a timing strut will have their times recorded (**Ch.14**)

14.4. **For Speed Events (except Drag Races)** the light beams must be set parallel to and between 28cm and 43cm above the road surface. The light beam at the finish must be set at the same height as the start beam. **Competitors** must be positioned at the start so that the part of the **Vehicle** that will break the beam is 10cm behind it.

14.5. **For Speed Events (except Drag Races)** the **Course Clear/Closed** signal must be separated from any other **Signal.**

14.6. Should the **Competitor** react to the timing system too quickly and drive away from the starting line before the green “go” signal then a foul start has occurred and when no time will be recorded and the **Competitor** may be **Disqualified** (red light start).

14.7. The **Course Closed Signal** must be red and if it is a light must be fitted with at least two bulbs. The **Course Clear Signal** must be green.

14.8. **For Drag Racing** two separate performances are monitored for each run, the elapsed time and the speed. On an elapsed time run the **Vehicle** first leaves the starting line connecting the beam which activates the electronic timer. As the **Vehicle** continues through the course the timer records the elapsed seconds and fractions of seconds until the **Vehicle** breaks the finish line beam and stops the timer. Top speed is determined by the **Vehicle** breaking one additional light beam at the **Finish Line.**

15. Alignment Lights

15.1. Where alignment lights are used they must be in a separate housing and can be of any colour except red or green. When **Course** conditions require a repeater of the **Course Clear Signal** can also be incorporated in this housing.

16. Autocross and Rallycross Events

16.1. The start timing should be synchronised with the starting **Signal** and not activated by a light beam.

17. Rallying Events

17.1. Where times are recorded to the minute a timepiece with an accuracy validated against GMT/BST Time is permitted (Ch.13).

18. Timing Equipment

18.1. All timing equipment used at any **ASN Permit Event** must have a licence plate attached and proof of current certification must always be available (except for **Interclub** or **Clubman** non-**Speed Event** competitions when this requirement only applies if specifically detailed in the discipline **Specific Regulations**). Part A App.18 Chart 2 identifies which **Events** require certified timing equipment.

18.2. **For Stage Rallies** the **Chief Timekeeper** must provide the **ASN Steward** (or send to the **ASN** within seven days) a standard report form listing the certificate numbers, serial numbers and names of the suppliers of the clocks being used.

18.3. Any Laser equipment must have **ASN** approval before use.

18.4. Adequate warnings must be displayed that a laser beam is being used and precautions taken to prevent any person looking directly into the beam.

19. Timing Equipment – Classification and Certification

19.1. It is mandatory for all timing equipment used to establish and publish times at **ASN Permit Events** to be of a type which has a current **ASN Certificate of Approval for Use** and to be tested and certified in accordance with Part A App.18 Chart 6.

19.2. Detailed specifications for all classes of approved equipment are available from the **ASN Technical Department** or any member of the **ASN Equipment Test Panel** with whom new purchasers or builders of equipment are advised to make contact. Specifications detailing the use of laser equipment are available from the **ASN Technical Office.**

19.3. To obtain an **ASN Certificate of Approval for Use** and **Certificate of Accuracy** equipment must be submitted for test to any member of the **ASN Test Panel** in a complete form and as normally used including any remote operating devices.

19.4. **ASN Certificates of Accuracy** will only be issued to custodians of equipment irrespective of ownership.

19.5. The **ASN Test Panel** for class E/A E E/B E/C F and R equipment is maintained by the **ASN Technical Office** and details of the current panel are available on request.

CHAPTER 5 OFFICIALS - PART A

Appendix 8 - Driving Standards Observers (Race)

1. Race (Ch.12)

1.1. The **Organisers** or the **ASN** can appoint **ASN-Licensed Driving Standards Observers** to monitor driving standards at all grades of **Race Events.**

1.2. Any **ASN-Licensed Race Clerk of the Course** is automatically considered an **ASN-Licensed Driving Standards Observer.**

1.3. The names of the **Driving Standards Observers** should either be given in the **Final Instructions** or posted on the **Official Notice Board** not less than 30 minutes before the start of the first **Practice** session.

1.4. All **Driving Standards Observers** should provide a full written report on any adverse driving standards to the **Clerk of the Course** as soon as possible with copies made available to adjoining **Observers'** posts as appropriate.

CHAPTER 5 OFFICIALS - PART A

Appendix 9 - Radio Co-ordinators and Radio Controllers

- The duties and responsibilities of all **Event Officials** including **Marshals** are detailed in **Ch.5.**
- The relevant general provisions of **Part A App.2 to this Chapter** apply together with the specific obligations in this Appendix.

1. Radio Co-ordinators

1.1. The **ASN** appoints **Radio Co-ordinators** for assistance in the administration of the **ASN Safety** and **Medical Frequency.** Their details can be found **below.**

1.2. **Radio Co-ordinators** must hold lists of approved **Radio Controllers** within their respective groups.

1.3. Details of the radio procedure to be used for this frequency are available from the **ASN**.

1.4. **Motor Clubs** should consult where appropriate with these **Co-ordinators** over operational procedures and administrative matters.

2. Radio Controller

2.1. Probationary Qualification

a. Applicants must be 18 years of age and over, **ASN** registered **Rally Marshals** at a minimum of Grade 3 **Rally** (**Sector/Senior Stage**) **Marshal** level and have attended:

i. For **Single Venue** grade: at least five **Single Venue Rallies** as a radio operator. or

ii. For **Multi-Venue** grade: at least 10 **Rallies** (of which a minimum of five must have been **Multi-Venue Events)** as a radio operator.

3. Training Period and Requirements

3.1. Applicants must:

a. Liaise with the **ASN Radio Co-ordinator** regarding initial training requirements.

b. Hold a **Probationary Controller Licence.**

c. Collect signatures from active **ASN-Licensed Radio Controllers** and **Event Clerks of the Course**, as validation of undertaking the following duties (one set of signatures is required per **Event**):

i. Sitting and observing in **Event** control during three **Events**.

ii. Assisting in controlling three **Events**.

iii. Being involved in the pre-**Event** organisation of three **Events**.

d. Attend at least one out of three consecutive **ASN Training Events** to which they are invited.

e. Complete all the required tasks referred to in the relevant **Probationary ASN Controllers Log Book.** This **Modular Training Programme** must be completed in not less than 12 months and not more than 36 months from date of appointment as **Probationary.**

4. Upgrading

4.1. For applicants upgrading to a **Multi-Venue Radio Controllers Licence**, **Arts.3.c.i., ii.** and **iii.** above must be completed at **Multi-Venue Rallies.**

5. Radio Controller Qualification

5.1. **Application**s may be received from **Probationary Radio Controllers** who have satisfied the requirements of **Art.3.1** above.

5.2. **Application**s must be accompanied by a letter of endorsement from an **ASN Radio Co-ordinator.**

6. Maintenance Criteria

6.1. To maintain their grade **Controllers** must apply annually to re-**Licence** and provide evidence as below:

a. Attend at least one out of three consecutive **ASN Specialist Training Events** to which they are invited and;

b. Gain a minimum of three signatures from **Clerks of the Course** annually to verify continued activity as a Controller. Alternatively the **ASN** may in its discretion accept an **ASN Radio Co-ordinator's** signature to support re-licensing.

6.2. Failure to produce evidence of the maintenance criteria may result in a review of the grade issued.

APPROVED RADIO CO-ORDINATORS

England

Cleveland, Cumbria, Durham, Northumberland
Simon Goodwin
✉ swiftcontrol@btinternet.com

East Yorkshire & Yorkshire
Chris Worbys

Cambridgeshire, North Lincolnshire, Lincolnshire, Norfolk, Nottinghamshire
Brian Avery
✉ brianaveryeagle1@gmail.com

Essex, Suffolk
TBC

Bedfordshire, Buckinghamshire, Derbyshire, Hertfordshire, Leicestershire, Northamptonshire, Oxfordshire, Staffordshire, Warwickshire, West Midlands
Harold Hicken
✉ hhicken@aol.com

Hampshire, Kent, Surrey, East & West Sussex
Sue Fielding
✉ susiefielding@outlook.com

Avon, Berkshire, Somerset, Dorset, Wiltshire, Gloucestershire, Herefordshire, & Worcester
TBC

Devon & Cornwall
TBC

Cheshire, Greater Manchester, Lancashire, Merseyside, Salop
Chris Woodcock
✉ chris.woodcock99@gmail.com

Isle of Man
TBC

Scotland
Garry Headridge
✉ garryheadridge79@btinternet.com

Wales
Kev Hughes
North Wales (down to A489/A470)
✉ kev@kevhughes.com

Alan Stoneman
Mid and South Wales
✉ alanstoneman@sky.com

Northern Ireland
Nigel Hughes

Appendix 10 - Rescue Crew and Rally Recovery Crew

1.1. The duties and responsibilities of all **Officials** are detailed in **Ch.5.**

1.2. The relevant general provisions of **Part A App.2** apply together with the specific obligations in this Appendix.

2. Training

2.1. Rescue Crew should refer to the ASN Rescue Pathway for details of trainee period and requirements and maintenance of licence.

2.2. Recovery crew members should attend at least two training sessions a year, at least one of which must be facilitated by an appropriate ASN registered Recovery Trainer, as well as several ASN-permitted Events to maintain their efficiency and status. Licensed crew members will not be automatically re-licensed on the basis of attending assessment days only. Training sessions provided by an appropriate ASN registered Recovery Trainer may be used as licence signatures. Regional Recovery Trainers can be contacted via the ASN.

2.3. Licence requirements:

Discipline	Acceptance for Training	Trainee Period & Requirements	Licence Acceptance	Maintenance of Licence
Rally/Cross Country Recovery	Gain endorsement **of Crew Chief** on existing **Recovery Unit** Attend one approved **Rally** Training day including radio procedure and fire training within two years of application Minimum age 18	Hold a **Trainee Licence** Collect 6 signatures from **Crew Chief** or **Rally Official** and attend two approved recovery training days, all within 2 years	Attend Approved **ASN Recovery Licence** Assessment. Demonstrate to assessors full familiarity and competence in the operation of all equipment Minimum age 18	Attend and pass 3 yearly Assessments. Satisfy ASN registered assessor that training attendances as per **Art.2.2** of this Chapter have been completed between assessments

CHAPTER 5 OFFICIALS - PART A

Appendix 11 - Emergency and Medical Officials

- The duties and responsibilities of all **Officials** are detailed in **Ch.5.**
- The relevant general provisions of **App.2 to this Chapter** apply together with the specific obligations in this Appendix.

1. Medical Arrangements

1.1. All medical staff must be adequately qualified, have appropriate registration with their professional body, and have a valid suitability check (DBS/PVG) through the ASN or subscribed to the DBS Update Service. Details of further requirements are listed below.

1.2. Anyone who has a restriction or sanction on their practice must notify the ASN. The ASN Licence may be suspended until these are removed.

1.3. Full details of equipment required and duties of **Medical** personnel are given in **Ch.10.**

2. Emergency and Medical Officials

2.1. For specific requirements for units and equipment please refer to **Ch.11.**

3. Doctors

3.1. All Doctors attending motorsport Events, must be ASN Licensed.

3.2. Anyone who ceases to be General Medical Council (GMC) registered will have their **ASN Licence** removed.

3.3. All Doctors must ensure the equipment necessary for the proper performance of their duties is available.

3.4. It is recommended that all Doctors should wear readily identifiable (preferably red) protective overalls or tabards. The backs should display the word Doctor.

3.5. All Doctors must 'sign-on' and where appropriate produce their ASN Doctor Licence at any Event at which they are officiating. They are under control of the Chief Medical Officer (where present) and Clerk of the Course at all times.

3.6. Doctor Licence

3.6.1 To be ASN Licensed, applicants must be currently registered with the GMC with a valid licence to practice, be able to work independently, and be in possession of adequate valid malpractice insurance. New applicants will be required to provide a Form 4 appraisal document and a medical CV.

3.7. Doctor (S) Licence

3.7.1 GMC registered Doctors who are no longer Residents and require supervision. Supervision requirements must be discussed and arranged with the Chief Medical Officer of the Event which they are working at.

3.7.2 To be ASN licensed, applicants must be currently registered with the GMC with a valid licence to practice, and be in possession of adequate valid malpractice insurance. New applicants will be required to provide a medical CV, a Form 4 appraisal document (where an appraisal has been conducted) or a letter of support from their educational Dean.

4. Eligible Paramedics

4.1. All Paramedics attending motorsport Events, must be ASN licensed.

4.2. To be ASN Licensed, applicants must be Health and Care Professions Council (HCPC) registered for a minimum of 2 years, currently in possession of a valid licence to practice, and have adequate valid

malpractice insurance. New applicants will be required to provide a copy of their qualification certificate.

4.3. Anyone who ceases to be on the HCPC register will have their ASN Licence be removed.

4.4. Paramedics must ensure the equipment necessary for the proper performance of their duties is available.

4.5. It is recommended that Paramedics should wear readily identifiable (preferably red) protective overalls or tabards. The backs should display the word Paramedic.

4.6. Paramedics must 'sign-on' and where appropriate produce their ASN Paramedic Licence at any Event at which they are officiating. They are under control of the Chief Medical Officer (where present) and Clerk of the Course at all times.

5. Eligible Nurses

5.1. All Nurses attending motorsport Events, must be ASN Licensed.

5.2. To be ASN licensed, applicants must be currently registered with the Nursing and Midwifery Council (NMC) for a minimum of 2 years as being a Nurse and be in possession of adequate valid malpractice insurance. New applicants will be required to provide a letter of support from the Chief Medical Officer or an ASN registered Senior Doctor of the venue they will work at confirming their suitability and experience.

5.3. Anyone who ceases to be registered as a Nurse with the NMC will have their ASN Licence removed.

5.4. Nurses must 'sign-on' and where appropriate produce their ASN Nurse Licence at any Event at which they are officiating. They are under control of the Chief Medical Officer (where present) and Clerk of the Course at all times.

6. Medical Assistants

6.1. All Medical Assistants attending motorsport Events, must be ASN licensed

6.2. Radiographers, Physiotherapists and Operating Department Practitioners. To be ASN licensed, applicants must be currently registered with the HCPC. New applicants will be required to provide a letter of support from the Chief Medical Officer or an ASN registered Senior Doctor of the venue they will work at confirming their suitability and experience.

6.3. Medical Assistants must 'sign-on' and where appropriate produce their ASN Medical Assistant Licence at any Event at which they are officiating.

6.4. Medical indemnity insurance is required and will not be provided by the ASN.

6.5. They are under control of the Chief Medical Officer (where present) and Clerk of the Course at all times.

7. Ambulance Crew

7.1. To be ASN licensed Emergency Care Assistants (ECAs) applicants must provide a copy of their FREC4 certificate and letter of support from the ambulance provider.

7.2. To be ASN licensed Emergency Medical Technicians (EMTs) applicants must provide a copy of their Level 4 Diploma Associate Ambulance Practitioner certificate and letter of support from the ambulance provider.

7.3. Ambulance Crew must 'sign-on' and where appropriate produce their ASN Ambulance Crew Licence at any Event at which they are officiating.

7.4. Medical indemnity insurance is required and will not be provided by the ASN.

8. Observer – Medical

8.1. Student Doctors, student Paramedics and student Nurses. To be ASN licensed, applicants must provide a letter from the university confirming student status.

8.2. Paramedics with less than 2 years since qualification. To be ASN licensed, applicants must be currently registered with the HCPC.

8.3. Nurses with less than 2 years since qualification. To be ASN licensed, applicants must be currently registered with the NMC.

8.4. Observer – Medical must 'sign-on' and where appropriate produce their ASN Observer – Medical Licence at any Event which they are officiating.

9. Observer – Doctor

9.1. GMC registered Doctors of Foundation grade (Residents).

9.2. To be ASN licensed, applicants must be currently registered with the GMC and provide a letter of approval from their Postgraduate Dean confirming Resident status.

9.3. Observer – Doctor must 'sign-on' and where appropriate produce their ASN Observer – Doctor Licence at any Event which they are officiating.

10. Chief Medical Officer

10.1. The Chief Medical Officer Licence grade will be individually reviewed and appointed by the ASN.

11. Professional Indemnity Insurance

11.1. Professional indemnity insurance is required by the above. Within the range of ASN arranged insurances medical malpractice insurance is now provided for volunteer Paramedics (registered with the Health and Care Professions Council) attending ASN authorised Events. This cover does not extend to any other category of medical personnel. It does not cover those Paramedics attending ASN authorised Events as a result of a commercial contract between their employers and the Event Organisers, promotors, or Venue owners or operators where the minimum level of required indemnification is £2,000,000 (Samaritan cover is not adequate). Please forward to ASN a copy of your insurance certificate in this instance on application.

12. Incident Reporting

12.1. An ASN Patient Report Form (PRF) must be fully completed for each individual treated.

Appendix 12 - Safety Delegates (Rally)

- The relevant general provisions of **Part A App.2 to this Chapter** apply together with the specific obligations in this Appendix.

1.1. The role of the **ASN Safety Delegate** is to assess the effectiveness of safety measures aimed at keeping the public, **Volunteers** and competing crews safe. The **Safety Delegate** is an experienced person provided as a check and balance on safety; they will provide support and advice to help in ensuring the safe planning and management of an **Event**.

1.2. The **Safety Delegate** role has four specific parts:

a. Input into an **Event** at planning stage – **Organisers** should contact their **Safety Delegate** in the early stages of the **Event** planning process to agree input;

b. Visiting each **Stage** usually on the day prior to the **Event** (with the **Spectator Safety Officer**, **Event Safety Officer** or other **Senior Official**) to confirm set-up plans and overview safety planning proposals;

c. Travelling around the **Special Stages** during the **Event** - in a safety car to a schedule agreed with the **Organiser** (and may travel with the **Spectator Safety Officer**);

d. Taking part in post-event debrief – including a written report to the **ASN** that will be made available to the **Organiser** of the **Event**. The **Safety Delegate** should provide the **Organiser** with a draft copy of this for comment prior to it being sent to the **ASN.**

1.3. The **Safety Delegate** also has specific regulatory powers. The **Safety Delegate** will exercise these powers if absolutely required on the **Event.** They will require a radio which has the capability to talk to both **Rally Control** and through **Radio Control** to the **Stages**. A poor report from the **Safety Delegate** would be expected to result in changes to the **Event** or potentially to a permit not being approved for that **Event** the following year.

1.4. Subject to **Art.1.5 below**, in the case of **Force Majeure** or for safety reasons the **Safety Delegate** may instruct the **Clerk of the Course** to postpone, abandon or stop an **Event** or part of an **Event**. Any such instruction must be formally recorded and must be copied to the **ASN**. Provided that an **Event** is run in more than one heat or part, these powers may, if thought fit, be exercised in respect of one heat or part.

1.5. The **Stewards of an Event** should so far as in their ability to do so prevent unnecessary danger and the **ASN Steward** has overriding authority in matters of safety save where the **ASN** has appointed a **Safety Delegate,** in which case the **Safety Delegate** shall have overriding authority in matters of safety.

CHAPTER 5 OFFICIALS - PART A

Appendix 13 - Safety Car Crew (Rally)

- The duties and responsibilities of all **Officials** are detailed in **Ch.5.**
- The relevant general provisions of **Part A App.2 to this Chapter** apply together with the specific obligations in this Appendix.

1. Role & Responsibilities

1.1. The primary function of the **Safety Cars** on an **Event** is to check the course for route and safety information and to provide this information to **Rally Control**.

1.2. All **Safety Cars** whether **Spectator Safety, Intermediate Safety,** 000, 00 or **Sweeper Cars** will be referred to as **Safety Cars.**

1.3. Further detailed responsibilities are contained within the **Stage Rally Safety Requirements** AND Annex I of that document.

CHAPTER 5 OFFICIALS - PART A

Appendix 14 - Liaison Officers

- The duties and responsibilities of all **Officials** are detailed in **Ch.5.**
- The relevant general provisions of **Part A App.2 to this Chapter** apply together with the specific obligations in this Appendix.

This Appendix covers:

a. Forestry Liaison Officers

b. Route Liaison Officers

c. Ministry of Defence Liaison Officers

1. Forestry Liaison Officers

1.1. The **ASN** has appointed **Forestry Liaison Officers (FLOs)** to each Forest District to provide a liaison between **Organising Clubs, ASN** and Natural Resources Wales, Forestry and Land Scotland and Forestry England or their nominated representatives ('the Forestry bodies').

1.2. The **FLOs** and the areas for which they are responsible are listed **below.**

1.3. The detailed **Regulations** regarding the arrangements for the authorisation of **Events** seeking use of the Enterprise's land are available from the **ASN.**

1.4. **Clubs** who are seeking use MUST NOT make direct contact with the Forestry bodies but MUST channel their enquiries through the appropriate **FLO** who will give guidance as to likely availability and problems on the use of specific forests.

2. Route Liaison Officers

2.1. Integral with the **ASN's** authorisation of motor **Rallies** under the relevant statutory legislation are responsibilities to consider the extent to which the holding of an **Event** might prejudicially affect the safety amenity and confidence of members of the public as well as mandatory liaison with a variety of Local Authorities.

2.2. The **ASN** is accountable to Government departments responsible for the enforcement of the **Regulations** and to the public who may be affected by the **Event** and who have the right to object directly to the **ASN** or to relevant Local Authorities.

2.3. For the above reasons the **ASN** appoints a **Route Liaison Officer (RLO)** to each of the relevant Local Authorities.

2.4. **RLOs** undertake duties on behalf of the **ASN Competition Authorisation Office (CAO)** and are **Officials** of the **ASN** for this purpose.

2.5. **RLOs** must act impartially with all **Organisers.**

2.6. The **RLOs** and the areas for which they are responsible are listed **below**.

3. MoD Liaison Officers

3.1. The **ASN** has appointed **MoD Liaison Officers ('MLOs')** to each **Regional Association** area to provide a liaison between **Organising Clubs** and the **ASN** and the **MoD** and its various departments**.**

3.2. The **MLOs** and the areas for which they responsible are listed **below**.

3.3. The **MLO** will engage with the **MoD** and its agents as a single point of contact for **Events** in order to improve communication and to provide guidance and information to assist **Clubs** using **MoD** land.

NATIONAL FORESTRY ORGANISATIONS

England

Forestry England
620 Bristol Business Park, Coldharbour Lane, Bristol, BS16 1EJ
☎ 0300 067 4900 ✉ fe.england@forestryengland.uk

East England
Santon Downham, Brandon,Suffolk, IP27 0TJ
☎ 0300 067 4500 ✉ enquiries.eastfd@forestryengland.uk

West England
Bank House, Bank Street, Coleford, Glos. GL16 8BA
☎ 0300 067 4800 ✉ westengland@forestryengland.uk

Westonbirt, The National Arboretum Tetbury, Gloucestershire, GL8 8QS
☎ 0300 067 4890 ✉ westonbirt@forestryengland.uk

North England
Eals Burn, Bellingham, Hexham, Northumberland, NE48 2HP
☎ 0300 067 4200
✉ enquiries.northengland@forestryengland.uk

South England
The Queen's House, Lyndhurst, Hants., SO43 7NH
☎ 0300 067 4600
✉ southern.enquiries@forestryengland.uk

Yorkshire
Outgang Road, Pickering, North Yorks, YO18 7EL
☎ 0300 067 4300 ✉ yorkshirefd@forestryengland.uk

Central England
Sherwood Pines Forest Park, Edwinstowe, Mansfield, Notts, NG21 9JL
☎ 0300 067 4340 ✉ central.district@forestryengland.uk

Forestry Liaison Officers for England

1. **Motorsport UK**
   ✉ rally@motorsportuk.org
   (Districts: Central)

2. **Barry Guess**
   ☎ 01252 727390
   ✉ barrygcharlie@aol.com
   (Districts: South & East England)

3. **Robin Hernaman**
   ☎ 01638 731501
   ✉ robinhernaman@gmail.com
   (District: East England)

4. **Ronnie Sandham**
   ☎ 01524 822574
   ☎ 07778 007044
   ✉ rsandham@gmail.com
   (District: North England)

5. **Rod Parkin**
   ☎ 0113 2262422
   ☎ 07850 783555
   ✉ rodparkin7@gmail.com
   (District: Yorkshire)

6. **John Parker**
   ☎ 01661 824692
   ☎ 07885 804545
   ✉ jparally@googlemail.com
   (District: North England)

7. **Kevin Witton**
   ☎ 07767 453664
   ✉ kevin.witton@rallyonline.co.uk
   (District: West England)

8. **Chris House**
   ☎ 01458 831130
   ☎ 01458 833348
   ✉ christopher.house@btinternet.com
   (District: West England)

Wales

Natural Resources Wales
David Liddy
✉ david.liddy@naturalresourceswales.gov.uk
✉ david.liddy@cyfoethnaturiolcymru.gov.uk

North East
Clawdd Newydd, Ruthin, Denbighshire, LL15 2NL

North West
Gwydyr Uchaf, Llanrwst, Conwy, LL26 0PN

Mid
NRW Office, Powells Place, Powells Lanes, Welshpool, Powys, SY21 7JY

South West
NRW Office, Llanfair Road, Llandovery, Carmarthenshire, SA20 0AL

South Central
NRW Office, Resolven, Neath, West Glamorgan, SA11 4DR

South East
NRW Office, Hadnock Road, Monmouth, Monmouthshire, NP25 3NQ

Forestry Liaison Officers for Wales

1. **Keith Ashley**
   ☎ 01432 272977
   ✉ ka@coronetsteels.co.uk
   (Districts: Llandovery, Coed y Cymoedd)

2. **Kevin Witton**
   ☎ 07767 453664
   ✉ kevin.witton@rallyonline.co.uk
   (Districts: Coed y Gororau, Coed y Mynydd)

Scotland

Forestry and Land Scotland
1 Highlander Way, Inverness Business Park,
Inverness, IV2 7GB
☎ 0300 067 6000

North
Golspie Office, Golspie Business Park, Golspie,
KW10 6UB
☎ 0131 370 5970

Smithton Office, Smithton, Invernees, IV2 7NL
☎ 0131 370 5956
✉ enquiries.north@forestryandland.gov.scot

West
Lochgilphead Office, Whitegates, Lochgilphead,
PA31 8RS
☎ 0131 370 5700

Fort William Office, Torlundy, Fort William, PH33 6SW
☎ 0131 370 5700
✉ enquiries.west@forestryandland.gov.scot

East
Huntly Office, Portsoy Road, Huntly, AB54 4SJ
☎ 0131 370 5100

Dunkeld Office, Inverpark, Dunkeld, PH8 0JR
☎ 0131 370 5436
✉ enquiries.east@forestryandland.gov.scot

Central
Aberfoyle Office, Aberfoyle, Stirling, FK8 3UX
☎ 0131 370 5674

West
Calder Office, Five Sisters House, West Calder,
EH55 8PN
☎ 0131 370 5680
✉ enquiries.central@forestryandland.gov.scot

South
Dumfries Office, Ae Village, Parkgate, Dumfries,
DG1 1QB
☎ 0131 370 5500

Forestry Liaison Officers for Scotland

1. **Jonathan Lord**
   ☎ 0141 946 5045
   ☎ 07774 788844
   ✉ jcl@rsacmotorsport.com

ROUTE LIAISON OFFICERS

Avon & Somerset
James How
Meadowsweet, Tolland, Lydeard Taunton, TA4 3PR
☎ 01984 667814 ✉ jthcodriver@btinternet.com

Bedfordshire: See Hertfordshire

Cambridgeshire
Clive Grounds
19 Youngman Avenue, Histon, Cambridge, CB24 9HP
☎ 01223 232861 ☎ 07860 461670
✉ clive@grounds.org.uk

Cheshire
Gordon Pirie
73 Liverpool Road, Great Sankey, Warrington, Cheshire, WA5 1QW
☎ 07974 479297 ✉ GordonPirie30@msn.com

Channel Islands: Refer to David Powell at Motorsport UK

City of London: Refer to David Powell at Motorsport UK

Cleveland: North of the River Tees – See Durham
South of the River Tees – See North Yorkshire

Cumbria
Fred Bent
Orchard House, Borwick Road, Arkholme, Carnforth, Lancashire, LA6 1BG
☎ 01524 221933 ☎ 07732 123399
✉ fredbent121@gmail.com

Derbyshire: See Staffordshire

Devon & Cornwall
Bob Challacombe
The Firs, 11 Nurseries Close, Exeter, Devon, EX3 0PG
☎ 01392 877111 ✉ bobchallacombe@btinternet.com

Dorset: See Wiltshire

Durham
Andrew Whittaker
16 Erskine Road, South Shields, Tyne & Wear, NE33 2TQ
☎ 0191 455 4420 ☎ 07591 843128
✉ andrew.whittaker1@blueyonder.co.uk

Dyfed Powys
Dorian Evans
14 Alban Square, Aberaeron, SA46 0DB
☎ 07812570911 ☎ 01545 570911
✉ big.dor@btinternet.com

Essex
Ted O'Day
8 Tower Road, Epping, Essex, CM16 5EL
☎ 01992 573422 ☎ 07802 447022
✉ ted.oday@btinternet.com

Gloucestershire
Martin Saunders
6 Notgrove Close, Cheltenham, Gloucestershire. GL516BB
☎ 01242 464199 ☎ 07798 584 713
✉ ted163@gmail.com

Greater London: Refer to David Powell at Motorsport UK

Greater Manchester: See Cheshire

Gwent: See Dyfed Powys

Hampshire
Richard Pashley
The Old Bailiffs House, 152 Brox Road, Ottershaw, Chertsey, KT16 0LQ
☎ 07512 354937 ✉ richardpashley@outlook.com

Hertfordshire
Dave J Smith
18 Alameda Road, Ampthill, Bedfordshire, MK45 2LA
☎ 01525 404 638 ☎ 07889 976 951
✉ mom106p@aol.com

Humberside: North – See North Yorkshire
South – See Lincolnshire

Isle of Man
Juan Turner
22 Park Close, Glen Vine, Isle of Man, IM4 4HB
☎ 01624 852555 ☎ 01624 854007
☎ 07399 006363 ✉ mail@juanturner.com

Kent
Roger Keene
39 New Road, London, SE2 0QH
☎ 0208 310 2699 ✉ qqwerty30@hotmail.com

Lancashire
Chris Woodcock
234 Shear Brow, Blackburn, Lancashire, BB1 8DS
☎ 01254 681350 ☎ 07973 830695
✉ chris.woodcock99@gmail.com

Leicestershire & Rutland: See Northamptonshire

Lincolnshire
Gerry Blythe
Lekeburn, 27 Kenwick Road, Louth, Lincolnshire, LN11 8EH
☎ 01507 606981 ✉ gerry.blythe@lekeburn.co.uk

Merseyside: See Cheshire

Norfolk
Pat Ward
47 Sterlet Grove, Mulbarton, Norwich, NR14 8FU
☎ 07466 501822 ✉ pjwrace@gmail.com

Northamptonshire
Nigel Evens
29 Icknield Drive, West Hunsbury, Northamptonshire, NN4 9YS
☎ 01604 702194 ☎ 07818 040010 (Before 9pm)
✉ nigelmevans@gmail.com

Northern Ireland: Refer to David Powell at Motorsport UK

Nottinghamshire: See Derbyshire

Scotland
Jonathan Lord
RSAC Motorsport Limited, PO Box 3333, Glasgow, G20 2AX
☎ 0141 946 5045 ☎ 07774 788844
✉ jcl@rsacmotorsport.com

Staffordshire
Mark Wilkinson
38 Alder Way, Holmes Chapel, Cheshire, CW4 8AD
☎ 07879657580 ✉ markwilkinson81@outlook.com

Suffolk
Paul Brewerton
5 Prince Street, Sudbury, Suffolk, CO10 1HZ
☎ 07702 113684 ☎ 01787 370976
✉ paulbrewerton1950@gmail.com

Surrey: See Sussex

Sussex
Matthew Fowle
Cilverly, Severals Road, Bepton, West Sussex, GU29 0LR
☎ 01730 814673 ☎ 07748 020894
✉ mattmdfowle@yahoo.co.uk

Thames Valley
Kim Bannister
18 Wiltshire Place, Wiltshire Road, Wokingham, RG40 1EP
☎ 07887 556088 ✉ kimbannister@btinternet.com

Wales (North)
Ifor Davies
Llecyn, Pencaenewydd, Pwllheli Gwynedd, LL53 6RB
☎ 01766 810213 ☎ 07772 297043
✉ iforsport4@gmail.com

Wales (South): See Dyfed Powys

Warwickshire: See West Mercia

West Mercia: Refer to David Powell at Motorsport UK

West Midlands: See West Mercia

Wiltshire
John Rogers
The Moorings, 99 Staverton, Trowbridge, BA14 6PE
☎ 01225 782358 ✉ johnfrogers@proton.me

Yorkshire (North/East)
John Richardson
67 West Park, Selby, North Yorkshire, YO8 4JN
☎ 01757 702048 ☎ 07803 296603
✉ rich.johnh@hotmail.com

Yorkshire (South/West)

Paul Slingsby

Wharfedene, Ben Rydding Drive, Ilkley, LS29 8BG

☎ 01943 605239 ☎ 07747 808579

✉ paul.slingsby@mail.com

NATIONAL PARKS

Brecon Beacons/Pembrokeshire: See Dyfed Powys

Dartmoor: See Devon & Cornwall

Exmoor: See Avon & Somerset

Lake District: See Cumbria

New Forest: See Hampshire

Northumberland: See Durham

Peak District: See Staffordshire

Snowdonia: See Wales (North)

South Downs: See Sussex

Yorkshire Dales/Moors: See Yorkshire (North)

MOD LIAISON OFFICERS

Association Of West Midland Motor Clubs
David Simons
☎ 07889 435 636
✉ david.simons@waresleyconsult.co.uk

Association of Northern Car Clubs
David Walmsley
☎ 07831 596292 ✉ davidcw54@outlook.com

Association Of North East Midlands Motor Clubs
East Midlands Association Of Motor Clubs
Phil Foster
☎ 07785 352 559 ✉ philfost@lineone.net

Scottish Association Of Motor Sports Clubs
Tom Matthews
☎ 07967 240 292 ✉ tom@condormsc.co.uk

Association Of Eastern Motor Clubs
Brian Hemmings
☎ 07703 830 704 ✉ bhemmings18@gmail.com

Welsh Association Of Motor Clubs
Chris Phillips
☎ 07307 877 750 ✉ bronant.phillips@gmail.com

Association Of South Western Motor Clubs
Dave Pearce
☎ 07738 388 405 ✉ mlo.aswmc@gmail.com

Association Of Northern Ireland Car Clubs
Wilson Carson
☎ 07831 454 031 ✉ wilson.carson@btinternet.com

Association Of Central Southern Motor Clubs
Richard Field
☎ 07870 781908 ✉ richard@richardfield.net

Association Of Central South Eastern Motor Clubs
Dave Clark
☎ 07967 627833 ✉ daveclark1949@btinternet.com

Association Of North East and Cumbria Car Clubs
Martin O'Hanlon
☎ 07867 823277 ✉ martyohrulz@hotmail.com

Association Of North Western Car Clubs
Nick Stafford
☎ 07805 439782 ✉ nick-stafford@live.com

CHAPTER 5 OFFICIALS - PART A

Appendix 15 - Club Safeguarding Officers

The **Safeguarding Officer** is the first point of contact for all safeguarding enquiries within your **Club**. This role helps to ensure that the welfare of all children, young people, and adults at risk is promoted in the **Club**'s activities. They should develop a positive culture that encourages both children and adults to share any concerns they have and be confident that they will be listened to. It is mandatory to have a **Safeguarding Officer** within your **Club**.

1. Responsibilities and Duties

It is the role of the safeguarding officer to promote the welfare of all **Club** members. This can include:

1.1. Ensuring you are familiar with the **ASN Safeguarding Policies**, procedures, and guidance.

1.2. Actively maintain and promote **Club Safeguarding Policies**.

1.3. Ensuring that you (or a nominated other) are in attendance and / or contactable at all **Events.**

1.4. Be the first point of contact for **Club** members if they have an issue or concern regarding someone's welfare.

1.5. Being aware of resources that can help support **Club** members.

1.6. Undergo safeguarding training when requested by the **ASN.**

One of the main responsibilities of a **Safeguarding Officer** is managing incidents concerning the welfare of children and adults at risk. This can involve:

1.7. **Reporting** safeguarding concerns to the **ASN Safeguarding Team** within 24 hours of becoming aware or notified.

1.8. Maintaining accurate records of safeguarding incidents.

1.9. Promoting and ensuring that confidentiality is maintained.

1.10. Sharing information on a need-to-know basis.

1.11. Liaising with statutory authorities as required / requested.

As a participating member of motorsport, they should uphold the values of the **Race With Respect Code.**

2. Skills and Qualities

A **Safeguarding Officer** should:

2.1. Demonstrate good communication skills.

2.2. Demonstrate a knowledge of equality and diversity issues.

2.3. Actively display and encourage the behaviours expected in the **Race with Respect Code of Conduct.**

2.4. Maintain a professional boundary with children, young people, and adults at risk.

2.5. Be approachable and friendly.

2.6. Have knowledge of safeguarding resources and legislation.

2.7. Be willing to learn about safeguarding.

2.8. Have ability to handle emotionally distressing matters and / or seek support if required.

2.9. Have administration and systems (records) management skills.

CHAPTER 5 OFFICIALS - PART A

Appendix 16 - ASN Trainers

- The duties and responsibilities of all **Event Officials** including **Marshals** are detailed in **Ch.5.**
- The relevant general provisions of **Part A App.2 to this Chapter** apply together with the specific obligations in this Appendix.

1. Trainers

1.1. **Trainers** are responsible for the delivery of approved training material at training events. This training may be for **Volunteers** and / or **Officials.**

1.2. They will liaise with the **ASN** on training matters and may design and deliver additional training materials based on the **ASN Officials** documentation.

1.3. They are responsible for collecting and collating feedback from participants and providing the collated **Results** to the **ASN.**

1.4. They will provide signatures and where appropriate comments on a **Marshals Personal Record Card.**

1.5. They may undertake the role of **Training Co-ordinator** if no other person is appointed to this role.

1.6. Responsible for organising training events for a **Club** or **Regional Association.**

1.7. They will take on budgetary and administrative responsibilities including but not limited to managing registrations, attendance records and issuing / collating feedback forms / comments

1.8. They will maintain training records for the purpose of upgrades and provide such information to the **ASN** when required.

CHAPTER 5 OFFICIALS - PART A

Appendix 17 - Officiel d'Honneur

1.1. **ASN** appointed **Officials** who have completed their active service to motor sport may be invited by the **ASN** to become an '**Officiel d'Honneur'.**

1.2. Such an appointment by the **ASN** may entitle the person concerned to certain privileges and the **ASN** may call on their experience to provide advice.

CHAPTER 5 OFFICIALS - PART A

Appendix 18 - Charts

Chart 1

MINIMUM ACCEPTABLE TIMEKEEPER LICENCE REQUIRED

Event Status	Race	Kart (1)	Speed incl. Records	Single Venue Stage Rally	Multi Venue Stage Rally
International	**International Race	**International Kart	**International Speed	**International Rally	** International Rally
National	National Race Timekeeper	Timekeeper Kart National	National Speed Timekeeper	Rally Timekeeper	National Rally Timekeeper
Interclub	National Race Timekeeper	Timekeeper Kart	National Speed Timekeeper	Rally Timekeeper	National Rally Timekeeper
Clubman	National Race Timekeeper	Timekeeper Kart	Timekeeper Speed	Rally Timekeeper	National Rally Timekeeper
** Where an **International Event** has no **National** content, an **International Timekeeper** Licensed by an **ASN** may be appointed. (1) For **Race Venue Karting** a **Race Timekeeper** of the appropriate grade may be appointed.					

Chart 2

REQUIREMENT FOR EVENTS TO HAVE CERTIFIED TIMING EQUIPMENT

	EVENT STATUS			
	CLUBMAN	INTERCLUB	NATIONAL	INTERNATIONAL
AUTOTEST/ SOLO	NO	NO		
ALL TRIALS	NO	NO		
NAVIGATION RALLY	NO (unless sections timed to less than one minute)	NO (unless sections timed to less than one minute)	NO (unless sections timed to less than one minute)	
ROAD RALLY (incl. TARGA, HISTORIC & ENDURANCE)	NO (unless sections timed to less than one minute)	NO (unless sections timed to less than one minute)	NO (unless sections timed to less than one minute)	NO (unless sections timed to less than one minute)
SAFARI, TIME TRIAL, TEAM RECOVERIES, CHALLENGE EVENTS	NO (unless timed to less than one minute)	NO (unless timed to less than one minute)	NO (unless timed to less than one minute)	NO (unless timed to less than one minute)
HILL RALLIES	NO (unless timed to less than one minute)	NO (unless timed to less than one minute)	NO (unless timed to less than one minute)	NO (unless timed to less than one minute)
CLUBCROSS	NO			
AUTOCROSS	NO	NO		
HILL CLIMBS/ SPRINTS		YES	YES	YES
DRAG RACE		YES	YES	YES
RALLYCROSS		YES	YES	YES

STAGE RALLY		YES	YES	YES
KART RACE	YES (unless lap scoring only)	YES (unless lap scoring only)	YES (unless lap scoring only)	YES (unless lap scoring only)
CIRCUIT RACE		YES	YES	YES

Chart 3

CHART OF MINIMUM ACCEPTABLE CLERK OF THE COURSE LICENCE REQUIRED

MOTORSPORT DISCIPLINE	EVENT STATUS			
	CLUBMAN	INTERCLUB	NATIONAL	INTERNATIONAL
SAFARI HILL RALLY	N/A	N/A	CROSS COUNTRY National	CROSS COUNTRY International
HILL CLIMB SPRINTS DRAG	N/A	SPEED National	SPEED National	SPEED International
RALLYCROSS	N/A	RALLYCROSS National	RALLYCROSS National	RALLYCROSS International (1)
STAGE RALLY (Multi-Venue)	N/A	STAGE RALLY National	STAGE RALLY National	STAGE RALLY International
STAGE RALLY (Single-Venue)	N/A	STAGE RALLY National (SVSR Only) (3)	STAGE RALLY National (SVSR Only) (3)	STAGE RALLY International
ROAD RALLY (Road) (4)	ROAD RALLY Full Licence	ROAD RALLY Full Licence	ROAD RALLY Full Licence	N/A
ROAD RALLY (Road Timed) (4)	ROAD RALLY Full Licence	ROAD RALLY Full Licence	ROAD RALLY Full Licence	N/A
ROAD RALLY (Navigational)	ROAD RALLY Full Licence	ROAD RALLY Full Licence	ROAD RALLY Full Licence	N/A
RACE	N/A	RACE National	RACE National	RACE International
KART	KART National	KART National	KART National	KART International
HOT LAP CHALLENGE	N/A	SPEED or RACE National (5)	N/A	N/A

(1) **A higher grade licence is valid for lower permit events of the same discipline.**

(2) For **Super K-X Events**, please refer to separate **ASN** guidelines.

(3) The unrestricted **National** or the **International Stage Rally Clerk of the Course** licence is also valid.

(4) Includes all Events timed to the second and to the minute.

(5) With ASN prior authorisation

Chart 4

CHART OF TECHNICAL OFFICIALS

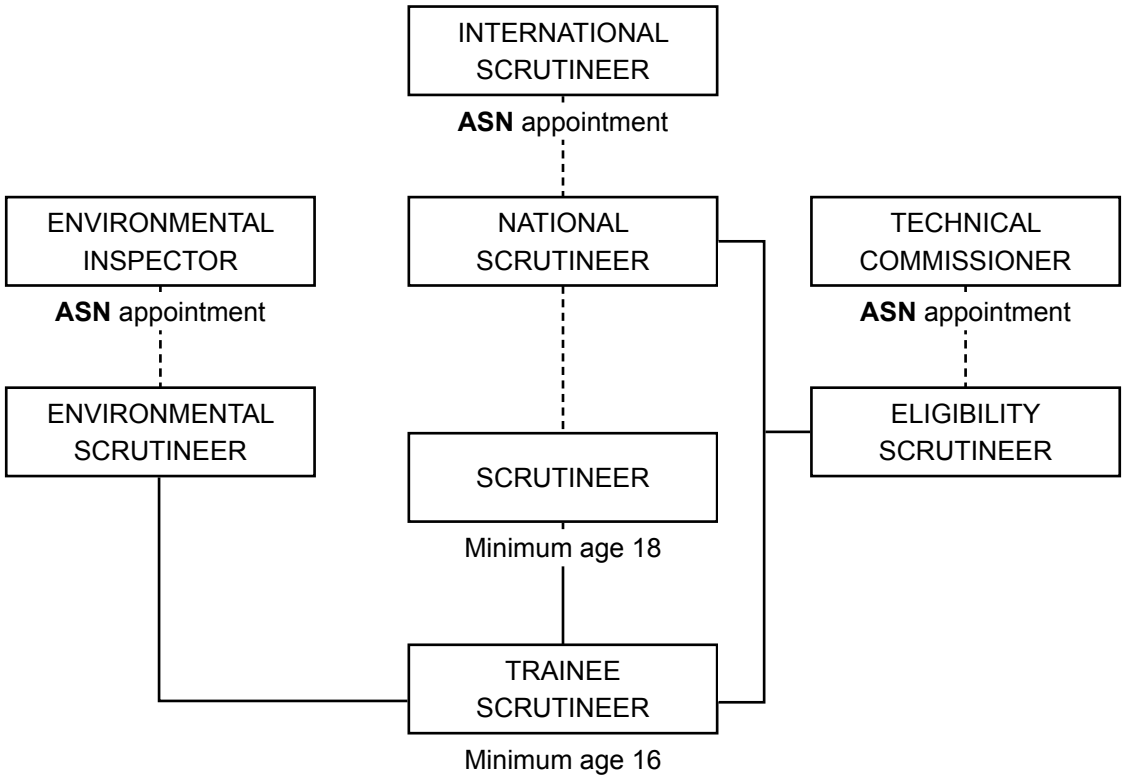

Chart 5

MOTORSPORT UK TIMEKEEPER GRADING STRUCTURE

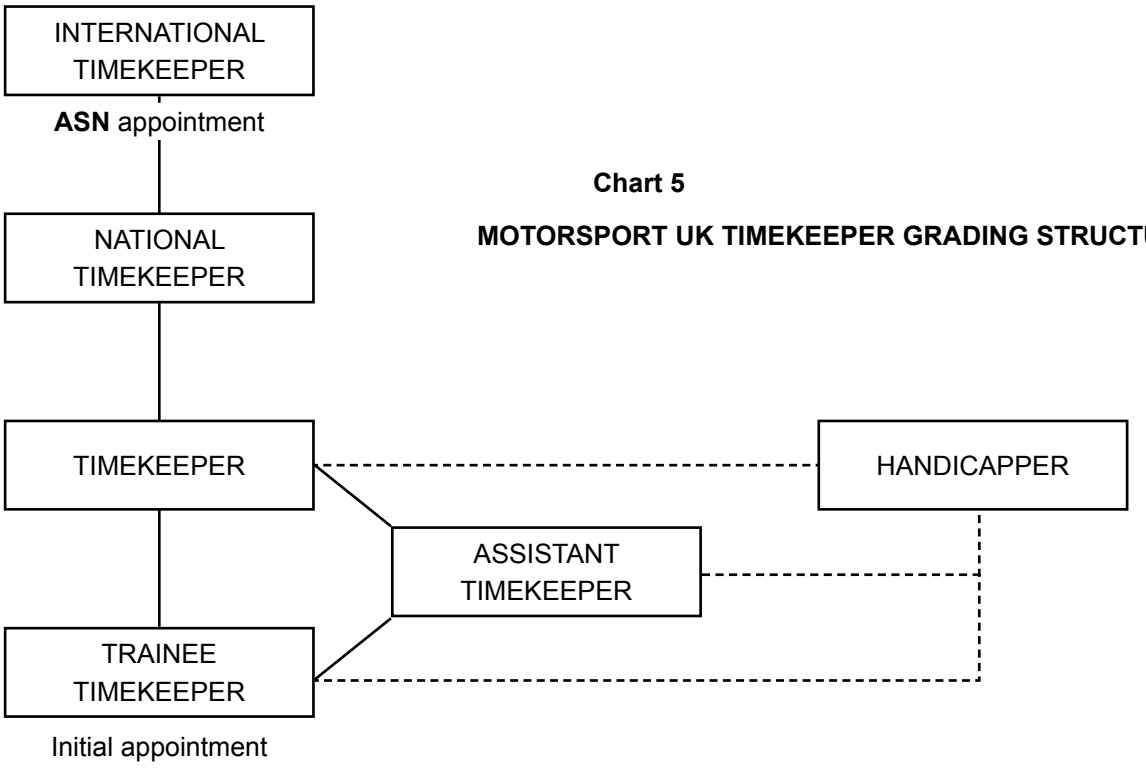

Chart 6

CHART OF TIMING EQUIPMENT CLASSIFICATION

Timing Equipment is classified as follows:

Equipment class	*Description*	*Suitable for*	*Certifying laboratory*
G/A	Vehicular actuated apparatus incorporating print-out. Issue times to 0.001 sec	Race/Karting	National observatory or NAMAS certified laboratory
G/A D/A	Vehicular acuated apparatus incorporating print-out. Issue times to 0.01 sec	Any event	As G/A
D	Vehicular actuated digital display. Issue times to 0.01 sec	International speed events	As G/A
E/A	Vehicular actuated apparatus incorporating print-out. Issue times to 0.01 sec	All except FIA events	ASN
E/A (10)	Vehicular actuated apparatus incorporating print-out. Issue times to 0.01 sec	All below National	ASN
E/A (10 K)	Transponder actuated apparatus. Issue times to 0.01 sec	Race/Short circuit Karting	ASN
E	Vehicular actuated digital display. Issue times to 0.01 sec	National speed events	ASN
E/B *	Apparatus with multi-memory split and digital display. Issue times to 0.1 sec	National events	ASN
E/C	Apparatus with split time function. Issue times to 0.1 sec	Clubman speed events	ASN
F	Vehicular actuated apparatus. Issue times to 0.1 sec	Clubman speed events	ASN
R	Time of day with split. Issue times to 1 sec	Rally timing	ASN
R (O/I)	Time of day with split. Issue times to 0.1 sec	Rally timing	ASN

*Some class E/B timers incorporate facilities to ensure that only those times coincident with the start of vehicle actuation are recorded to 0.01 sec. These may be used in conjunction with a class E/A printing clock to produce short interval times to 0.01 sec accuracy (Latching System). The time interval is not to exceed 5 mins and in the event of any difference or dispute the E/A time is to be issued as the true time.

CHAPTER 5 OFFICIALS

PART B

Appendix 1 - Event Secretaries

- The duties and responsibilities of all **Event Officials** including **Marshals** are detailed in **Chapter 5.**
- The relevant general provisions of **Part A App.2 to this Chapter** apply together with the specific obligations in this Appendix.

1. Event Secretary

1.1. The **Event Secretary** is responsible for all materials and notices required for the organisation of the **Event.** This documentation may be created by other persons responsible to the **Organisers** and includes all paperwork pertinent to the **Event** including acceptance of entries, allocation of **Competition** numbers, collation of signing-on declarations, **Licence** examinations where applicable and the submission of items required to be sent to the **ASN Steward** and / or the **ASN** after the **Event.**

1.2. The **Organisers** may appoint one or more deputies to assist the **Event Secretary.**

1.3. The **Event Secretary** must be present through **Practice** / qualifying and the **Competition** to assist in the correct running of the **Event.**

1.4. The **Event Secretary** must maintain a list of novice **Competitors.**

1.5. **Competitors** who fail to produce the necessary documents to prove their eligibility to take part in an **Event** must be reported by the **Event Secretary** to the **Steward(s).**

1.6. The **Event Secretary** and any **Deputies** shall:

a. Have access to a current edition of the applicable **NCR** (with amendments if any).

b. Post on the **Official Notice Board** (whether physical or digital) all **Permits,** bulletins, authorisations, penalties or other decisions, times, grids and **Results** and all of which are **Official Documents.**

c. Ensure all results, bulletins, decisions and communications are signed, timed and dated by the **Clerk of the Course** and / or **Steward(s)** at the point of issue.

d. Be responsible for receiving any **Protests** or **Appeals** from **Competitors** noting time of receipt. Thereafter they shall refer any **Protests** to the **Clerk of the Course** and any **Appeals** to the **Steward(s).**

e. Ensure that the relevant **Competitor** signs and the **Event Secretary** must pass to the relevant **Judicial Official** the necessary **Undertaking** to pay the relevant **Fee** or any **Fine** imposed by the **Judicial Officials**.

f. Ensure that publicity for the **Event** is arranged in compliance with **Ch.3** so that the general public are aware of the **Event.**

g. Liaise with the **Chief Timekeeper** and **Clerk of the Course** to confirm the proposed timetable for **the Event.**

h. Ensure the **ASN Steward**, media services and connected parties are made aware of an **Event** cancellation.

1.7. All **Official Documents** issued for an **Event** by the **Event Secretary** must contain information required by **Ch.3.**

CHAPTER 5 OFFICIALS - PART B

Appendix 2 - Event Stewards

- The duties and responsibilities of all **Event Officials** including **Marshals** are detailed in **Ch.5.**
- The relevant general provisions of **Part A App.2 to this Chapter** apply together with the specific obligations in this Appendix.

1. The **Club / Event** appoints the **Event Steward** who will either work as part of a panel of 3 with the **ASN Steward** or on their own.
2. **Ch.5 Part A App.4** also applies

CHAPTER 5 OFFICIALS - PART B

Appendix 3 - Chief Marshals

- The duties and responsibilities of all **Event Officials** including **Marshals** are detailed in **Ch.5.**
- The relevant general provisions of **Part A App.2 to this Chapter** apply together with the specific obligations in this Appendix.

1. Chief Marshal

1.1. A **Chief Marshal** will be appointed either by a **Club** or by **Event Organisers.**

1.2. A **Chief Marshal** may be responsible for the **Marshals** and other **Event Officials** within their **Club** or at a specific **Event.**

1.3. The **Chief Marshal** will liaise with the **Clerk of the Course**, **ASN** or **Event Steward** and, where appointed, the **ASN Safety Delegate** to confirm adequate numbers of **Marshals** and make changes if required.

2. Club Chief Marshal

2.1. For the **Club** they are responsible for keeping records of **Club** members who are available for marshalling and arranging for their attendance at **Events** where marshalling assistance has been requested.

3. Event Chief Marshal

3.1. For an **Event** they are responsible for:

a. the allocation of sufficient and competent **Marshals** to comply with **Official Documents** and any specific **Venue** requirements.

b. Maintenance of the relevant and necessary contact information of **Marshals** signing on at the **Event**

CHAPTER 5 OFFICIALS - PART B

Appendix 4 - Championship Co-ordinators

1.1. The duties and responsibilities of all **Event Officials** including **Marshals** are detailed in **Ch.5.**

1.2. The relevant general provisions of **Part A App.2 to this Chapter** apply together with the specific obligations in this Appendix.

1.3. **Ch.4 applies** to **Championships.**

1.4. A **Championship Co-ordinator** is a person who has any administrative function in connection with a **Championship** regardless of whether their title is **'Co-ordinator'** or' **Administrator**' or some other construct.

1.5. A **Championship Co-ordinator** is responsible for liaison between the **Championship Organiser**, the **Event Organiser,** the **Competitors**, and the **Championship Stewards** as well as for the distribution of all relevant information pursuant to the published **Championship Regulations.**

1.6. The **Championship Co-ordinator** may liaise with the **Event Secretary** or any other relevant **Official** over any relevant matters.

1.7. A **Championship Co-ordinator** may only issue **Championship Bulletins** with the approval of the **Championship Organiser**. A **Championship Co-ordinator** when present at a **Championship Event** must sign on and remain at the **Event** until the conclusion of all relevant **Championship** matters.

1.8. The **Championship Co-ordinator** has no **Judicial** function whatsoever and may not impose any sanction or penalty nor take any form of **Judicial** or quasi-**Judicial** action in connection with the **Championship** or any **Registered Competitor.**

1.9. The **Championship Co-ordinator** may request the **Championship Stewards** to conduct an investigation and hold a **Hearing** (in conformity with **Ch.2**) in respect of any alleged breach of the **Championship Regulations**. If requested to do so by the **Championship Stewards** the **Co-ordinator** may assist with the administrative elements only of such an investigation or **Hearing.**

1.10. The **Championship Co-ordinator** as an independent person responsible for the fair administration of a **Championship** for the benefit of all **Championship Competitors** must not be connected in any way to any **Entrant** or **Competitor** in the **Championship** or **Sponsor of the Championship.** Thus the **Co-ordinator** cannot enter a **Competitor** or any **Vehicle** in the **Championship** nor undertake any preparation of any **Vehicle** competing in the **Championship** nor maintenance of such a **Vehicle** while at an **Event.**

CHAPTER 5 OFFICIALS - PART B

Appendix 5 - Mentors and Assessors

- The duties and responsibilities of all **Event Officials** including **Marshals** are detailed in **Ch.5.**
- The relevant general provisions of - **Part A App.2 to this Chapter** apply together with the specific obligations in this Appendix.

1. Mentor

1.1. An **Officials' Mentor** will provide guidance, advice, feedback, and support to the Mentee using a range of techniques.

1.2. They should make contact regularly to provide support as the Mentee progresses through their motorsport journey.

2. Assessor

2.1. An **Officials' Assessor** will ensure that the competence and / or knowledge demonstrated meets the required standards.

2.2. They are required to assess candidates / Mentees at events performing duties, and question candidates / Mentees about how they would deal with standard and non-standard situations.

2.3. Provide feedback and suggest future actions.

2.4. Complete the relevant **ASN Assessment** paperwork and provide to the **ASN.**

Appendix 6 - Driving Standards Observers (non-Race)

- The duties and responsibilities of all **Event Officials** including **Marshals** are detailed in **Ch.5.**
- The relevant general provisions of **Part A App.2 to this Chapter** apply together the specific obligations in this Appendix.

1. The **Organisers** of non-**Race Event**s can appoint **Driving Standards Observers** who are not **Licensed** by the **ASN** to monitor driving standards at all grades of non-**Race Events**.
2. The names of the **Driving Standards Observers** must either be given in the **Final Instructions** or posted on the **Official Notice Board** not less than 30 minutes before the first **Competitor** starts the **Event.**
3. All **Driving Standards Observers** shall provide a full written report on any adverse driving standards to the **Clerk of the Course** as soon as possible after the incident is observed.
4. Their function is to monitor driving standards, including noise and speed levels, and report driving likely to bring the sport into disrepute.
5. **Driving Standards Observers** are empowered to inform **Competitors** that they will be penalised in accordance with the **Regulations**, which can include withdrawal from the **Event**.
6. No protests or appeals can be made against their decisions.
7. **Driving Standards Observers** must provide a full written report, to the **Clerk of the Course** as soon as possible before publication of provisional results.
8. Details of any penalty applied by the **Observer** must be included in the published results.
9. The names of any **Observers** should either be given in the **Final Instructions** or posted on an **Official Notice Board** at signing-on not less than 30 minutes before the first car is due to start.

Chapter 6

Licensing

CHAPTER 6 - LICENSING

This Chapter is separated into the following appendices:

App.1 **Competitor** and **Entrants** Responsibilities

App.2 Medical

App.3 Grades of **Event** and **Licence Types** and **Grades**

App.4 **Competition Licence Applications**, Retention and Upgrading – General

App.5 **Competition Licence Applications**, Upgrading, Downgrading and Retention of **Licences** – **Race Licences**

App.6 **Competition Licence Applications**, Upgrading, Downgrading and Retention of **Licences – Kart**

App.7 **Competition Licence Applications**, Upgrading, Downgrading and Retention of **Licences – Rallying**

App.8 **Competition Licence Applications**, Upgrading, Downgrading and Retention of **Licences – RS Licences**

Ann.A **Licence Eligibility**

Ann.B **Licence Structure**

1. Introduction

- The **ASN** is empowered by the **Federation Internationale De L'Automobile (FIA)** to register and **Licence** British citizens wishing to compete nationally under the **ASN National Competition Rules** and / or internationally under the **FIA International Sporting Code.** Under certain circumstances citizens of other countries may also apply for registration. **Registration** will be effected by the issue of a **Competition Licence** of a type applicable to the motor sports discipline and the status **National** or **International** in which the applicant wishes to compete.
- Subject to certain conditions a status of **Licence** may be upgraded at any time during the year. All Registrations expire at 31 December annually.
- Any person from 6 years of age wishing to register must complete a **Competition Licence** application form.
- All applicants are required to complete a medical self-declaration.
- Applicants for a **Car, Truck or Race Venue Kart Racing**, and all **International** grades of **Licence** will be required to pass a medical examination and/or vision test.
- The following regulations contain all terms and conditions of **Registration** and **Licence** issue.

All **Licence Holders** must comply with the **Regulations** in this Ch.6 and with the **Specific Regulations** for the individual type of **Event.**

2. Liabilities

2.1. All persons connected with the **Event**, whether by taking part in it or acting in an official capacity, are bound by the **ASN National Competition Rules** (and where applicable the **Code**) and the **Official Documents** and where applicable must comply with the Law relating to motor vehicles.

2.2. Any breach of **Regulations** relating to the **Event** shall whether or not a **Penalty** is specified be subject to any or all of the penalties specified in these **Regulations** (see Ch.2).

2.3. An **Entrant** shall bear the prime responsibility for compliance with the **Regulations** by all persons connected with an **Entry**. If an **Entrant** is not present at an **Event** in person their nominated **Driver** or if there is more than one **Driver** the first nominated **Driver** shall be deemed to be their agent and shall bear all the duties and responsibilities of the **Entrant.**

2.4. Any breach of **NCR** by a **Driver** acting as an agent shall not absolve the **Entrant** from responsibility and both **Driver** and **Entrant** shall be liable to penalty.

2.5. Any **Driver** who is not acting as an **Entrant**'s agent or any other person carried in or assisting with a competing **Vehicle** during an **Event** shall not be absolved from their own responsibility under the relevant **Regulations** because of the responsibilities assumed by the **Entrant** or their agent.

2.6. Any person in possession of an **Official Event** pass or other means of identification issued by the **Organiser** shall be deemed to be assisting the **Entrant** to which the means of identification concerned has been issued.

2.7. These **Regulations** and any of the Appendices thereto may be amended or added to by means of announcements published in an official **ASN Bulletin.**

2.8. No interpretation or clarification of any **Regulation** will be valid unless in writing or in an **Official Document.**

3. Competitor Registration

3.1. **Registration** is only effected by the issuing of a **Competition Licence** by the **ASN**. Such issue is conditional upon the applicant's credentials satisfying the **ASN** on a continuous basis. At all times the **ASN** reserves the right to refuse to issue a **Competition Licence**. The reason(s) for any such refusal shall be stated.

3.2. Any **Competition Licence** issued will remain the property of the **ASN** which reserves the right to withdraw or suspend at any time. The reason(s) for any such withdrawal or suspension shall be stated. A **Licence** so suspended shall be surrendered to the **ASN** forthwith on demand.

3.3. A **Competition Licence** granted by **ASN** does not constitute a certificate of the competency of the holder.

3.4. **Competition Licence – Period and Validity**

a. Unless otherwise rendered invalid, all **Licences** for the purposes of acquaintance and submission to these rules run from the 1st January to the end of the calendar year shown on the **Licence**.

b. To be valid a **Competition Licence** must be signed in ink (excluding digital licences) and except for an **Entrant's Licence** issued in the name of a firm or organisation, must bear a passport type photograph of the holder being a current likeness.

4. Competition Licence – Types

4.1. The types of **Licence** available are **Race, Kart, RS** and **RS – Stage Rally** and **Entrant**.

5. Competition Licence – Grades

5.1. The grade of **Licences** available are (highest first) **International, National, Interclub** and **Clubman.**

6. Assumed Name

6.1. If **Registration** and a **Licence** is requested under an assumed name or a pseudonym special application must be made at the time of applying for **Registration**. The **ASN** may at its sole discretion issue a **Licence** in such a name. Any assumed name must not be likely to deceive or offend. A person granted a **Licence** in an assumed name shall not take part in any **Competition** except under the name shown on such **Licence.**

7. Nationality and Residence

7.1. The **ASN** is entitled to register and issue licences to:

7.2. A British citizen, including a citizen of any part of the territory of the **ASN**.

7.3. A citizen of any other country represented on the **FIA** providing they can provide proof to their parent **ASN** that they are permanently resident within the UK and that their **ASN** has given its prior permission and has recovered any licence originally issued. **ASN** authorisation is required for each licensing year.

8. Acts Prejudicial to Motor Sport

8.1. A **Competition Licence Holder** who does anything to bring motor sport into disrepute or commits an act prejudicial to the interest of motor sport generally may face disciplinary action by the **ASN**. A **Licence** when suspended by the **ASN** or the **National Court** must be surrendered to the **ASN** forthwith on demand.

9. Minimum Ages

9.1. In all cases where the applicant is under 18 years of age the application must be counter-signed by the Parent or Guardian. Proof of guardianship may be required.

9.2. A minor **Competitor** shall not take time off school to participate in motorsport without the prior written approval of their school.

9.3. **Annex A** to this general text sets out **Licence** eligibility.

9.4. **Annex B** to this general text provides a **Licence** application flowchart.

CHAPTER 6 LICENSING

Appendix 1 - Competitors and Entrants Responsibilities

1. Entrants' Responsibilities

1.1. An **Entrant** must ensure that:

a. Only the nominated **Vehicle** is used throughout the **Event.**

b. Only the nominated **Driver**(s) drive that **Vehicle**.

c. Only nominated persons are carried in that **Vehicle**.

d. Satisfy themselves before the **Event** as to the eligibility and safety of the **Vehicle** and the safety equipment and competence of its **Driver**.

e. The **Competition Vehicle Entered** is maintained in an eligible and safe condition throughout the **Event**.

1.2. The act of presenting a **Vehicle** and safety equipment for official scrutiny shall be deemed a declaration of its fitness and eligibility for the **Event** and an acceptance of the consequences of such a declaration not being valid.

1.3. **Vehicles** must comply with **ASN Technical Regulations** and any appropriate **Approved Formulae Regulations** and where applicable the **Official Documents.**

1.4. The **Entrant** is responsible for all acts or omissions on the part of their **Driver**(s), mechanics, passengers, and all other persons connected in any capacity with their **Entry**, but each of these shall also be responsible for any breach of the **Regulations**.

1.5. The **Driver** of any **Vehicle** disqualified as a result of the actions (or inactions) of their **Entrant**, Mechanic, engine or body builder, or any other person assisting in any capacity with their **Entry**, may also be subject to any penalties associated with that **Disqualification.**

1.6. **Entrant**s and **Driver**s are Forbidden to Abandon one **Event** and compete in another.

1.7. Any **Entrant** having entered, or any **Driver** having undertaken to drive in any **Event**, who does not take part in that **Event** and takes part in another **Event** on the same day may thereby become liable to be fined.

1.8. However a **Competitor** who has been notified that their **Entry** has been accepted conditionally or that a decision has been deferred may enter for another **Event** on the same day on condition that if their **Entry** for the second **Event** is accepted they shall forthwith notify the first organising **Club** and withdraw from the first **Event**.

1.9. **Entrant**s must respect that the **ASN** has the right to require alcohol and illicit drugs testing on any Person howsoever connected with any **Entry** within an **ASN Permitted Event** and **Competitor**s must at all times cooperate fully with the relevant procedures. These procedures are in addition to and not in substitution for any procedure undertaken by or at the instance of UK Anti-Doping or where applicable under the Code.

2. Competitors' Responsibilities

2.1. All **Entrant**s, **Drivers**, **Navigators** and other **Passengers** must 'sign-on' at the **Event** on a form prescribed by **ASN** and in a manner prescribed by the **Organiser** and must undertake to comply with the declarations prescribed by the **NCR** and shall not be allowed to take part in the **Event** until they have produced the necessary documents to prove their eligibility for the **Event.** In addition if the **Vehicle** is to be used on the **Public Highway** an appropriate current valid **Road Traffic Act Licence** (RTA **Licence**) will be and evidence of current valid Road Traffic Act insurance may be required.

2.2. When requested **Competitors** must present their **Vehicle** in a clean condition with any relevant paperwork for scrutineering at the nominated time prior to taking part in the **Event** or at any time during the **Event**.

2.3. **Competitors** must attend any meeting or briefing by the **Clerk of the Course** or by the **Stewards of the Event** where this is required by the **Official Documents.**

2.4. **Competitors** and their service / pit assistants must at all times obey the instructions of an authorised **Official** of the **Event.**

2.5. **Competitors** and their service / pit assistants must at all times display means of identification (i.e. passes etc.) as provided by the **Organisers.**

2.6. **Competitors** must remain available at an **Event** until any protest period relating to their **Event** or appeal period in any matter in which they are involved has elapsed failing which any judicial action against or relating to that **Competitor** may be heard in their absence.

2.7. Any **Competitor** knowingly injuring a **Marshal,** an **Official** or spectator during an **Event** must:

a. Ensure that adequate help is available.

b. **Report** the incident to a **Senior Official** as soon as possible.

c. **Report** personally to the **Clerk of the Course** not later than the conclusion of the **Event** and remain at their disposal until released.

d. If the incident happened on the **Public Highway Competitors** are reminded of their obligations under the RTA.

3. Foreign Events

3.1. A **Competition Licence Holder** proposing to compete in an **Event** outside the European Union is required by **FIA** Rules to ensure that the **Event** is inscribed on the **FIA International Calendar. International Competition Licences** issued by **ASN** constitute an authorisation 'Visa' and allow eligible holders to compete abroad on such **Event**s.

3.2. Only **Competitors** classified as finishers and who have produced the appropriate documents to prove their eligibility for a **Competition** will be eligible for an award or an individual position in the **Results** unless the **Official Documents** specify otherwise.

4. Results and Awards

4.1. Any award which is not specifically offered to a person other than the **Entrant** will be given to the **Entrant**.

4.2. Where eligibility for an award depends upon **Club Membership** this will be determined by means of the **Club Membership** claimed on the **Entry** form. Details of the **Club** must be printed in the **Official Documents**. No **Competitor** may compete for more than one such award.

4.3. No **Competitor** may be a member of more than one team competing for the same award unless the **Official Documents** specify otherwise.

4.4. A 'novice' will be a **Driver** who has not previously won an award in a **Competition** of similar or higher status and type unless the **Official Documents** specify other conditions.

4.5. The results of a **Competition** will be 'Provisional' until all **Vehicles** subject to **Post-Event Scrutiny** have been examined and a report submitted to the **Clerk of the Course**, all official enquiries by the **Clerk of the Course** and / or **Race Director** completed and every **Competitor** has had an opportunity to **Protest** and / or **Appeal** in accordance with the **Regulations** and such **Protest** or **Appeal** has been duly heard.

4.6. Once results are **Final** they may not be changed subject only to the powers held by **ASN** or in the **Event** of judicial action resulting from an exceptional extension of **Protest** or **Appeal** time limits or the results are affected by the outcome of a subsequent **Right of Review** procedure.

4.7. If the **Provisional Results** are amended for any reason, fresh **Provisional Results** must be published and these become subject to the rights to **Protest** or **Appeal** in these **NCR**.

4.8. If Results are available to all **Competitors** on the day copies of these results need not be posted to **Entrants**. Any alteration to the **Provisional Results** must be notified to all **Entrants** and which can be a digital notification**.**

5. Advertisement of Results of Competition

5.1. Any **Competitor** or other persons or body advertising the results of a **Competition** shall state the exact conditions of the performance, refer to the nature of the **Competition,** the **Category**, **Class**, etc., of the **Vehicle**, and the position and result obtained and such additional information as the **ASN** may require.

5.2. The publication of an advertisement relating to the results of a **Competition** drawn up in a way calculated to mislead the public or the breach of Art. 27 above whether by way of omission from or addition to the particulars required to be stated or otherwise shall render the person or body by whose authority or on whose behalf the advertisement is published or issued liable to the penalties provided by these **NCR** and may entail the infliction of a **Penalty** on the person responsible for drawing up the advertisement.

6. Successful Prosecution

6.1. Any **Competitor** who is successfully prosecuted before a criminal court as a result of their conduct in connection with a motor **Vehicle** whilst taking part in an **Event** may, at the discretion of the **Stewards of the Event,** subsequently be **Disqualified** from the **Results** of that **Event** and be required to forfeit or return any award. Details of any successful prosecution known to the **Organising Club** shall be passed to the **ASN** who will endorse their **ASN Licence** record and may disqualify the person concerned from competing in other **Events.**

7. Insurance

7.1. Further details of Insurance are given in **Ch.1 App.3**.

7.2. In respect of any **Event** or part of an **Event** held anywhere other than on a publicly adopted road under a **Permit** issued by the **ASN**, **Competitors** are insured in respect of third-party public liability by the **ASN Master Policy.**

7.3. **Competitor**s are not insured under this policy in respect of legal liability to other **Competitors**.

7.4. It is the **Competitor**'**s** responsibility to ensure that they are properly insured as required by the Law whilst on publicly adopted roads.

7.5. The **Competitor** must comply with the terms of the master insurance policies effected by **ASN** the principle terms of which are summarised in **Ch.1 App.3**.

7.6. A full copy of the master insurance policy may be seen on application to the **ASN**.

8. Advertising

8.1. During the period of validity of an **Event Permit** there are no restrictions on advertising on **Vehicles** in the UK except as follows:

a. The display must not be offensive.

b. No display should interfere with the easy identification of the **Vehicle's Competition Number.**

c. No display on a transparent surface can exceed 13cm in depth.

d. Advertising is prohibited on road rallies except as provided for in **Ch.13**.

e. Subject to **8.1.f** below, Tobacco related advertising is prohibited on all competing **Vehicles,** their support vehicles and any other form of equipment directly connected with an **Entrant** or **Competitor**.

f. Where a Vehicle presents with historic or period-correct tobacco advertising forming part of its original competition livery, this may be allowed but the Entrant shall remain solely responsible for ensuring that any such display complies with the Tobacco Advertising and Promotion Act 2002 and any other applicable law.

Nothing in this Regulation shall be taken as permitting, approving or authorising the display of tobacco advertising where prohibited by law.

9. Event Advertising

9.1. The **Competitor** must make available to the **Organiser** a specified area of 645 sq cm on each side of the car, adjacent to the space allocated for the vehicle's competition number, and clearly visible, on which the **Organiser** may specify the **Event**, its sponsor or the course on which it is being run. Normally, this will be above or below the number background.

9.2. Where required in the **Official Documents** the **Competitor** taking part in an **Event** of a **Championship Series** must also make available a specified area of 645 sq cm on each side of the **Vehicle** on which the **Organiser** may specify the **Championship** and its sponsor (if that sponsor is different from the sponsor of the individual **Event**) so long as the **Competitor** is required to display only the title of the **Championship**.

9.3. Failure to display markings required by the **Official Documents** may result in loss of **Championship** points.

10. Entries

10.1. Individual entries for an **Event** must be made in writing on the **Organiser's Entry** form before the specified closing date of entries.

10.2. Acceptance of entries shall be at the discretion of the **Organisers** whether or not the number of entries submitted exceeds the maximum number to be accepted in the **Competition.**

10.3. The **Organisers** may at their discretion:

a. Note: items marked * must be published in **Official Documents**

b. Select entries as they wish.

c. Refuse any **Entry**. No **Event** or **Championship Organiser** shall have the right to refuse an **Entry** on unreasonable grounds and **Competitors** may **Appeal** if they feel the grounds are unreasonable (**see Ch.2**)

d. Refund any **Entry** fee or excuse a **Competitor** payment of any **Entry** fee.

e. *Publicise in the **Official Documents** the method by which entries are to be selected.

f. ***Organisers** may require accepted entries to comply with some specific conditions prior to being permitted to start but only provided such a condition is stated in the **Official Documents.**

g. *Abandon, cancel or postpone the **Competition** or any class therein should insufficient entries be received, provided that a minimum number of entries is specified in the **Official Documents**.

h. Amalgamate existing **Classes** or create additional **Classes** should the type and size of **Entry** appear to warrant such action, provided that the intention so to act is notified in writing to all **Competitors** affected, not later than the closing date for entries.

i. Permit the nomination of **Drivers** to be delayed up to the time of issuing the official list of **Competitors**.

10.4. The **Organisers** shall within seven days of receipt of an **Entry** or within two days of the closing date for entries, whichever is the earlier notify an **Entrant** that their **Entry** is:

a. Accepted, or

b. Refused, or

c. Placed on a list of reserves and the position on that list, or

d. Held in abeyance for further consideration.

e. In the case of an **Entrant** notified that their **Entry** is classified under **d. above**, they shall be notified within two days of the closing date of entries as to the final classification of their **Entry**.

f. An **Entrant** shall be free to withdraw an **Entry** to which **Art.10.3 d, e or h** above relates provided the **Organisers** are so informed in writing within three days of the **Entrant** being notified.

g. When an **Organiser** is accepting entries up to one hour before a **Competition** they must notify all

accepted entries not less than three days before the **Event** if there is any likelihood of the **Event** being cancelled because of lack of entries.

Refund of Entry Fees.

10.5. An **Entrant** shall have the right of a refund of the Entry fee only if:

a. The **Event** is cancelled or postponed for more than 12 hours unless the **Official Documents** have provided for a specified part to be retained towards administrative expenses.

b. An otherwise eligible reserve **Entry** is not permitted to take part in the **Event**.

c. An **Entry** is withdrawn as permitted by these **Regulations**.

d. An **Entry** is refused.

e. Provision is made in the **Official Documents** for full or partial refund to a **Competitor** notifying the **Organisers** IN WRITING prior to a specified date, that they wish to withdraw their **Entry**.

11. Competition Licence - Inspection

11.1. **Licences** must be produced for inspection at all **Events** prior to a competitor taking part.

11.2. **Competitors** failing to produce a correct **Licence** will pay a non-production fee as detailed in Ch.1 App.2 or may be disqualified from the **Event** by the **Stewards**.

11.3. Exceptionally, **Autocross**, **Drag**, **Kart** and **Rallycross**, where both a **PG** and the **Driver's Licence**, specific to a single entry, cannot be produced a single non-refundable fee will be payable.

11.4. Under no circumstances can this fee be considered as a substitute for holding a valid **Competition Licence**.

11.5. Only the originals of licences and **Upgrade Cards** are acceptable. Photocopies or facsimiled copies are not acceptable.

11.6. One **Entrant's Licence** covers all the entries at an **Event** in the name of that **Entrant**.

12. Competition Licence Restrictions

12.1. No person shall apply for or hold a current **Entrant's** and/or **Driver's Licence** from more than one **ASN** (other than in Art.13.4 below) and such licences shall, if both are required, always be obtained from the same **ASN**.

12.2. No person may apply for or hold more than one current **Licence** of the same category.

12.3. In special circumstances and, only once annually, the holder of a licence issued by this **ASN** may apply to another **ASN** to issue them with a licence. This may only be granted if they are permanently resident in the territory of the **ASN** to whom they are applying, have surrendered their **Licence** to, and obtained written permission from this **ASN**.

12.4. A British citizen, having a licence issued in a foreign country which is not endorsed with the EU flag (27), will be able to take part in events within the territory of this **ASN**, subject to also taking out a Motorsport UK **Interclub** or **National Competition Licence**.

CHAPTER 6 LICENSING

Appendix 2 - Medical

1. General

a. When applying for a **Competition Licence** all applicants are required to declare any physical disability.

b. All **Competition Licence** applicants should check the current medical guidelines and criteria published on the **ASN** website **www.motorsportuk.org**.

c. The ASN reference as the minimum benchmark for **Licence** requirements is the regulations laid down by the DVLA in relation to Group 2 Driving Licences.

d. All competitors should be immunised against tetanus.

e. **Competitors** with any medical condition that may affect their treatment in an emergency (e.g. asthma, anaphylaxis, serious cardiac conditions) should wear a silicone medical alert bracelet declaring their medical condition and they should inform the **Chief Medical Officer** of their condition before competing.

f. An annual eyesight test is recommended.

g. The mouth should be kept clear of anything likely to cause a blockage of the airway in the event of an incident. It is advisable to remove dentures and to refrain from chewing gum.

h. **Competitors** are advised to refrain from wearing jewellery which in the event of an incident could prove hazardous (with the exception of Art.1.e above).

2. Medical Declaration – All Applicants

2.1. Certain medical conditions as detailed in **Art.6.6 below** are incompatible with the practice of motor sports at any status of **Event.**

2.2. All applicants are required to complete an annual medical self-declaration of medical fitness to compete in ASN **Competition**.

2.3. If an applicant has not had a recent medical examination and eyesight test or they do not understand any part of the medical requirements set out hereunder they should have an examination or eye test other than as provided for in **Arts.5–6.1 below.**

2.4. The decision as to fitness or unfitness to compete resides entirely with the **ASN**.

2.5. Applicants for **National Race** and all **International Licences** must comply with these Regulations. A **National Race Licence** is for these purposes any grade of **Licence** other than an **International Licence**.

2.6. All **International Competition Licences** incorporate a **Certificate of Aptitude** for the purposes of the **Code.**

3. Access to Medical Records

3.1. The following legislation applies ("the Acts"):

a. Access to Medical Reports Act 1988

b. Access to Personal Files and Medical Reports (Northern Ireland) Order 1991

c. Access to Health Records and Reports Act 1993 (Isle of Man).

3.2. Before the ASN can apply for a medical report from a doctor who has cared for you we need your consent by signing the Declaration in Section 5 of the application. Before doing so however Applicants should read this notice carefully as it sets out rights under the Acts and the procedures for dealing with reports.

3.3. You do not have to give your consent but if you do you can say whether you wish to see the report before it is sent to the **ASN Medical Consultant.** If you do not give consent we will be unable to proceed with your

application for a **Competition Licence**. If you say you wish to see the report we will write to your doctor and advise you that we have done so, and we will tell your doctor you wish to see the report. You will then have 21 days to contact the doctor about arrangements for you to see the report. Delay will affect delivery of any **Licence** granted by the **ASN**.

3.4. If you say you do not wish to see the report we do not have to notify you if we apply for one. However if before such a report is sent to us you write to the doctor saying you wish to see it you will then have 21 days to contact the doctor about arrangements for you to see the report.

3.5. Whether or not you say you wish to see the report before it is sent to us the doctor must let you see a copy for up to six months after it is supplied if you ask.

3.6. If you ask the doctor for a copy of the report they can charge you a reasonable fee to cover their costs.

3.7. If you see a report before it is sent to us the doctor cannot submit it until they have your consent. You can write to the doctor asking them to amend any part of the report which you consider to be incorrect or misleading and have attached to the report a statement of your views on any part where you and the doctor are not in agreement.

3.8. The doctor is not obliged to let you see any part of a report if in their opinion that would be likely to cause serious harm to your physical or mental health or that of others or would indicate the doctor's intentions towards you or if disclosure would be likely to reveal information relating to or the identity of someone else who has supplied information about you, unless that person has consented or the information relates to or has been supplied by a health professional involved in caring for you. In such cases the doctor must notify you and you will be limited to seeing any remaining part of the report. If it is the whole report which is affected they must not send it to us unless you give your consent.

4. Medical Declaration - National Car, Truck, Race Venue Kart Racing and all International Licence Applicants

4.1. The following medical examination and reporting provisions apply to all applicants for **National Car**, **Truck** and **Race Venue Kart Racing Race Competition Licences** and to all applicants for **International Competition Licences**. Medical examination should be reported by the applicant's GP but may be reported by an alternative medical practitioner suitably qualified to practice medicine in the UK and acceptable to the **ASN.**

4.2. In all cases the **Licence** can only be granted within 3 months of the date of the relevant medical examination after which date the relevant medical report must be revalidated by the original examining medical practitioner.

5. National Race Licences

5.1. All applicants for **National Race Competition Licences** under the age of 60 at the date of application for **Licence** must comply with **Arts.2.1–2.3 above** and if applicable **Arts.9.1–9.6 below.**

5.2. All applicants for an upgrade of **Licence** must conform to the relevant **Licence** grade medical requirements.

5.3. At the following age intervals a medical examination and a vision test per **Arts.6.7–7.2 below** and a 12 Lead Resting ECG will be required:

a. 60

b. 65

c. 70

d. 72

e. 74

f. Annually from 75

6. All International Licences

6.1. The following requirements apply to all applicants for all grades of **International Competition Licences**

including **Co-Drivers** on **International Rallies:**

a. Aged 49 and under - RENEWAL & FIRST TIME APPLICATION

   i. 12 lead ECG every 24 months

   ii. Medical examination and eye test per **Arts.6.7–7.2 below** every 12 months

b. Aged 50 to 74 – RENEWAL & FIRST TIME APPLICATION.

   i. Stress Related ECG per **Art.8.1 below** every 24 months.

   ii. Medical examination and eye test per **Arts.6.7–7.2 below** every 12 months

c. Aged 75+ - RENEWAL & FIRST TIME APPLICATION.

   i. Stress Related ECG per **Art.8.1 below** every 12 months.

   ii. Medical examination and eye test per **Arts.6.7–7.2 below** every 12 months.

6.2. No **Car, Truck, Race Venue Kart Racing** or **International Licence** will be issued until the **Medical Examination Report** if required has been completed endorsed and signed by the applicant's GP.

6.3. In the event of any uncertainty as to whether or not the applicant satisfies the Medical requirements the examination form should be signed by the GP and should then be sent directly to the **ASN Medical Administrator** with any additional information which may be of assistance.

6.4. Any fee charged for the medical examination is the responsibility of the applicant. This also applies to any additional reports and Specialist examinations requested by the **ASN** in connection with an application for a **Competition Licence**.

6.5. The medical examination should be carried out to a standard similar to that required for Life Insurance but with specific attention to the following:

a. Diabetics requiring treatment with insulin will not normally be issued with a **Licence** valid for **Racing, Karting, Kart Clubman, Rallycross, Stage Rallying** or **International Rallying**. In certain circumstances the **Medical Consultant** at the **ASN** will be prepared to consider applications in writing by Insulin controlled Diabetics. Each applicant would need to present themself to a Diabetics Specialist recommended by the **ASN** and any costs incurred would be borne by the applicant.

b. Epilepsy: In all cases **Art.2.4 above** applies. Epilepsy is incompatible with fitness to **Race**, **Kart, Kart Endurance, Kart Tyro, Kart Bambino, Rallycross** or **Stage Rally**. If a person with epilepsy has not had a seizure or medication to prevent or control fits for a period of ten years they may present that case to the **ASN Medical Consultant** for consideration. For other types of **Event** a person with epilepsy may be considered for a **Competition Licence** provided they can show that they have not had a fit for five years whether on or off medication.

6.6. The following medical conditions may prevent the granting of a **Competition Licence**:

a. Myocardial infarction.

b. Myocardial ischaemia.

c. Coronary artery by-pass surgery.

d. Coronary Angioplasty.

e. Valvular Disease of the Heart or other abnormal condition whether operated on or not.

f. Severe hypertension which has given rise to cardiopulmonary problems.

g. Any mental or behavioural disorders*, past or present whether or not under treatment with drugs or therapy.

h. Epilepsy, seizures or any other neurological conditions (and see **Art.6.5.b. above**)
*As defined in ICD.10 (**International Classification of Diseases)**.

6.7. The following eyesight standards are required to be met by applicants for a **National Licence**. Applicants

for **International Licences** please refer to **FIA Standards**, www.fia.com (Appendix L).

a. Minimum corrected visual acuity must be 6/6 with both eyes open.

b. Minimum binocular field should measure at least 120 degrees along the horizontal meridian with no defects within the central 20 degrees.

c. Spectacles, which must be for the sole purpose of correcting eyesight (and/or sun protection), should be fitted with shatterproof lenses. Contact lenses if worn should be certified as satisfactory for motor sport by the ophthalmic specialist who supplied them.

d. A person who suddenly loses sight in one eye will not be allowed to hold a **Licence** until five years has lapsed.

e. Double vision is not compatible with the issue of a **Competition Licence**.

f. Normal colour vision; method of analysis used should be a pass of the Ishihara test (24 plate version) with the first 15 plates presented in random order, being identified without error. In the case of any anomaly recourse is to the Farnsworth test "Panel D15" or to an analogous system as approved by **ASN**. In any event as well as passing such tests as referred to above there must be no risk of any errors in the perception of the colours of flags or any light boxes (LED or otherwise) used in **Competitions.**

7. Race, Truck and Race Venue Karting.

7.1. For **Race**, **Truck** and **Race Venue Kart** first time applicants a vision test to include a test for colour blindness is required to **Art.6.7 above**.

7.2. Applicants renewing from the age of 45 years to 69 years are required to complete a vision test every 5 years see **Art.6.7 above**.

7.3. Applicants renewing from the age of 70 years and over are required to complete a vision test at the following age intervals: 70, 72 and annually from 74 see **Art.6.7 above**.

8. Medical Declaration – International Licence Applicants – 50 and over Stress ECG requirements

8.1. The stress electrocardiogram shall be carried out to a symptom limitation on a motorised treadmill to a standard Bruce Protocol; an equivalent bicycle ergometric protocol is acceptable. Recording is to be made in 12 leads at rest following hyperventilation and for each minute of exercise and each of ten minutes of recovery. Reason for cessation to be stated; report submitted must be by a specialist accredited in cardiology and signed by a consultant cardiologist.

9. Medical Declaration – Disabled Drivers

9.1. When applying for a **Competition Licence** all applicants are required to declare any physical disability.

9.2. Any applicant with a congenital abnormality of any limb, or amputation or with any other disability should first contact **ASN Medical Section Administrator** who will be pleased to advise and help the applicant.

9.3. In addition to the requirements of **Art.4.1 above**, disabled applicants should note the following:

9.4. The following medical conditions may prevent the granting of a **Competition Licence**:

a. Paraplegia

b. Hemiplegia

c. Quadriplegia

d. Loss of limb.

9.5. Disabled **Driver**s may be required to present themselves for examination by **ASN Medical Consultant**. If required to attend such examination the applicant will be required to provide, in advance, a note from their GP describing the applicant's disability and, if applicable, an opinion from any specialist who has been consulted.

9.6. Any **Driver** or **Co-Driver** / **Navigator** who has any medical condition or disability or who is currently on anti-coagulant therapy should declare this at the time of **Entry** to an **Event**. Such information is solely for the use of the Chief of **Event** medical services in the event of an accident.

9.7. Disabled **Competitors** in an activity where **Competition Numbers** are required should display the **FIA Non-Ambulant Logo** (as supplied by the **ASN**) on both sides of the **Vehicle** adjacent to the side numbers to alert **Marshals** in the case of an incident. (**Art.9.11**).

9.8. **Competitors** in all disciplines must be able to evacuate the **Vehicle** in a maximum of 10 seconds from the normal seated position with harness / seatbelts fastened and the steering wheel in place.

9.9. Postal applicants for an **RS Clubmans Licence** who answer yes to either of the following questions:

- Do you have any serious medical condition which affects your ability to drive and control a **Vehicle**?
- Are you epileptic or do you suffer from any fits, fainting spells or blackouts or take any medication to control this? may be issued with a **Competition Licence** endorsed **Non-Driver** to allow participation as a **Passenger** or **Navigator.**

9.10. For **Events** other than Hill Rallies and Competitive Safaris **Passengers** applying for an **RS Clubmans Licence** on the day who answer yes to either of the following:

- Do you have any serious medical condition which affects your ability to drive and control a car?
- Are you epileptic or do you suffer from any fits, fainting spells or blackouts or take any medication to control this? are permitted to participate on the day as a **Passenger** or **Navigator** and may be issued with their **Competition Licence** endorsed **Non-Driver** subject to being able to satisfy **Art.9.8 above.**

9.11.

CHAPTER 6 LICENSING

Appendix 3 - Grades of Event and Licence Types and Grades

1.1. **Competitors** need a **Competition Licence** for most forms of motor sport organised under a **Permit** issued by the **ASN**. The Application process is depicted by **Annex A Chart 1** Select the status and type of **Event** from **Annex A Chart 2** this shows the minimum acceptable **Licence**.

1.2. **Competitors** must normally have registered and have their **Licence** before competing in any **Event** but with the specific exception of **Race, Race Venue Kart Races*** and **Stage Rallies**, Organisers** are permitted to accept a properly completed **RS Clubman, RS Interclub** or **Kart Application Form** along with the appropriate fee in lieu of the **Licence**.

1.3. ***Competitors** who have just completed their **ARKS** test may also produce their correctly completed application and payment in lieu of the **Licence** (except for **Race Venue Karting**).

1.4. ****Navigators** at **Interclub** or lower status **Stage Rallies** may apply for an **RS Interclub Licence**. This can however only be done once annually at **Event**s of **Interclub** or lower status. No priority fee is payable and the fee for non-production of **Licence** is not applicable.

1.5. **Licences** issued by Motorsport Ireland will be deemed valid for all British **Events** providing the holder complies with all the requirements for the **Event**. Under a reciprocal agreement all **ASN Licences** are valid in Eire.

1.6. **National Competition Licences** issued by countries outside the UK will be deemed valid for British **Events** providing the following applies and **Competitors** obtain approval from their own **ASN**:

a. The **Event** has been inscribed on the **ASN National Calendar** and that the holder complies with all the requirements for the **Event**.

OR

b. To ensure compatibility with UK **ASN Licence** requirements **Clubs** must require foreign **Competitors** to comply with the following:

i. If the **Event** is of **Super K-X**, **Interclub** or **Clubman** status the **Competitor** must be a member of or join the **Organising Club** or one of the invited clubs.

ii. At an **Interclub or National Race Event** the **Competitor** must sign a declaration that they are competent to compete in the appropriate **Race** and must satisfy the **Clerk of the Course** prior to **Practice** that they are aware of the **Signals**. The **Competitor** should be subject to special observation during **Practice** and must achieve a lap time of at least 120% of the **Class** best unless the **Clerk of the Course** is satisfied as to extenuating circumstances. At an **Interclub Event** if the **Competitor** has not previously finished six **Races** the **Competitor** must carry a novice cross on the rear of the **Vehicle.**

iii. At any **International Race Event** the **Competitor** must hold a valid **International Licence**.

iv. **Short Circuit Kart** Racing. Except in **Bambino** or **Super K-X Events**, the **Competitor** must carry ‘Novice’ number plates unless they can provide the **Organisers** with proof of having finished in at least six **Kart Races**. Normal observation during **Practice.**

v. **Race Venue Kart** Races. A declaration must be signed that the **Competitor** has finished at least six **Kart Races** (**Race Venue** or **Short Circuit**). The **Competitor** must carry ‘Novice’ number plates unless proof can be provided to the **Organisers** of having finished at least four **Race Venue Kart Races.** Special observation during **Practice.**

vi. **Interclub Rallies.** The **Driver** must hold a road **Licence** valid within the UK. No other restrictions save for valid Road Traffic Act insurance where **Public Highway** sections are used within the **Event.**

vii. **National Rallies.** As vi above, but the **Competitor** must sign a declaration that they have competed in at least four **Rallies.**

viii. **Co-Drivers.** No special requirements.

ix. All other **Event**s. For all other **Events** which do not utilise the **Public Highway.** No special restrictions apply.

1.7. **ASN Licence** holders of **National** or above grade are entitled to compete in **National Events** overseas providing the **Event** has been inscribed on the relevant ASN's current **Sporting Calendar** and the **Competitor**(s) comply with the requirements of the **Event**. The **Competitor** will then be subject to the regulations of the appropriate ASN. National **Licences** will incorporate automatic permission to take part in such **Event**s and contains the words "Authorisation to take part in **National** and **International Competition**s abroad in accordance with **Articles 2.3.7 and 3.9.4 of the FIA ISC**".

1.8. ASN **Licence** holders of any **International** grade will be entitled to take part in **Events** of the appropriate type on condition that those **Events** are entered on the **FIA International Calendar**. **ASN International Licence**s incorporate automatic permission to take part in such **Events**. In case of difficulty please contact **ASN**.

1.9. Concessions to holders of an **International Historic Licence** may be available, please refer to the **Code.**

1.10. Non UK ASN **Race Licence** holders attending an **ASN** recognised **Competition** driving school may take part in up to two **National Events** organised by that school on the strict condition that they have the agreement of both their parent **ASN** and the **ASN**. In such cases their original **Licence** must be lodged with the **ASN** who will then issue a suitable **Licence** for the **Event**, following receipt of a completed application. This **Licence** will be exchanged by the **ASN** for their original **Licence** at the conclusion of the **Event**(s).

2. Entrants

2.1. All personal Competition **Licences** entitle the holder to enter the **Car**, **Truck** or **Kart*** in which they will personally take part in the **Event**. Any other organisation, company, sponsor or person must obtain an **Eentrant's Licence** by making separate application by completing an Application for **Competition Licence** Form. Such an entity is required to provide full details of the legal persons controlling the entity.

2.2. *In addition, please note the above is subject to the specific regulations which apply to **Drag Racing** (see Ch.15), **Karting** (see Ch.18), Rallycross and Autocross (see Ch.16).

2.3. The **Entrant** is the legal entity who is responsible for all acts and / or omissions of the **Driver / Co-Driver** and any Person howsoever connected with the **Entry**. A **Competitor** must ensure that any **Entrant** is aware of this.

2.4. **Entrants** must respect that the **ASN** has the right to require alcohol and illicit drugs testing on any Person howsoever connected with any **Entry** operating within an **ASN Permitted Event** and shall at all times cooperate fully with the relevant procedures. These procedures are in addition to and not in substitution for any procedure undertaken by or at the instance of UK Anti-Doping.

2.5. The maximum number of words permitted in an **Entrant's** title is six.

2.6. Only one **Entrant's Licence** may be used in connection with an **Entry** (i.e. two three-word **Licences** cannot be used to make one **Entry**).

2.7. An **International Entrant's Licence** is valid for all **Events** both inside and outside the UK.

2.8. A **National Entrant's Licence** is valid for all **Events** inside the UK excluding **International,** except in the case of **Events** for **Karts** and **Historic Cars** where it has the same validity as an **International Entrant's Licence.**

2.9. **Competitors** who intend to use this **Licence** internationally must advise the **ASN** at the time of application.

2.10. Where a **Competitor** has not reached their 18th birthday the **Entry** for an **Event** must be counter-signed by their **Parent or Guardian**. Such person will be considered as being the **Minors' Entrant**, and as such will be subject to these **Regulations.**

2.11. The **Parent or Guardian** must attend the **Event** with the Minor, and sign-on as their **Entrant**.

2.12. Rallycross, Autocross, Drag Race and Kart Race require in addition a PG Entrant's Licence to be held.

2.13. Where a **PG Entrant's Licence** is required the following will apply:

a. A **Competition Licence** Application form must be countersigned by the **Competitor**'s **Parent or Guardian**. The **Competitor**'s **Parent or Guardian** must hold a **PG Entrant's Licence**.

b. If the **Parent or Guardian** does not already hold such a **Licence**, the **PG Entrant's Licence** Application must accompany the **Competition Licence** Application form when it is submitted to **ASN**.

c. At an **Event** a **Competitor** must be accompanied by the holder of a **PG Entrant's Licence** who must sign on as the **Entrant** of that **Competitor**.

d. When the holder of the **PG Entrant's Licence** is unable to be present (or has signed on but subsequently needs to transfer responsibility) they may appoint in writing an **Entrant's** Representative to act as their agent for all purposes under these Regulations. However, the holder of the **PG Entrant's Licence** will remain fully liable and responsible under the Regulations, as principal, and as if they had accompanied the **Competitor**. The **Entrant**'s Representative must be in possession of the **PG Entrant's Licence**. Note that an exemption in writing may be sought from the **ASN** in advance of the relevant **Event** should a PG **Entrant**'s **Licence** be required to be produced at more than one **Event** on the same day.

e. The **Entrant** (who signs on at the **Event** as the **Entrant**) of the **Competitor** will be responsible for the conduct of mechanics, helpers, team personnel and all persons associated with that **Competitor** at the **Event**.

f. For **National Events** within the UK a "**PG" Entrant's Licence** will suffice. For **International Events** a **Competitor** must be accompanied by a **Licensed Entrant** whose **Licence** must be valid for **International Events**.

g. Should a **PG Entrant's Licence** be suspended at an **Event** the holder may not participate further but the **Licence** shall remain valid to the extent provided below. The holder of that **PG Entrant's Licence** may appoint an **Entrant's Representative** as in **c. above** in order that the **Competitor** may continue to participate at that **Event**. That appointment shall continue to be effective as an **Entrant's Representative** to act on their behalf at subsequent **Events** in order to facilitate the **Competitor**'s ongoing participation whilst the suspension of the PG **Entrant**'s **Licence** remains in force but the **PG Entrant's Licence** holder is entitled to make substituted appointments pursuant to **c. above** at any time following the **Event** at which the **PG Entrant's Licence** was suspended. The **PG Entrant's Licence** holder may not attend subsequent **Events** in person whilst any suspension remains in force.

h. Where an **Entrant's Representative** has been appointed only the holder of the **PG Entrant's Licence** may appoint an alternative **Entrant's Representative.**

i. Where a **Parent or Guardian** has formally appointed a representative only that representative is entitled to be present in any judicial hearing – the **Parent or Guardian** having transferred their own entitlement.

j. Where a **Championship** mandates that the holder of a **PG Entrant's Licence** must appoint an Entrant's Representative in the form of a **Team Entrant's Licence** holder, the **Team Entrant's Licence** holder will be subject to the provisions of **d. above**.

Appendix 4 - Competition Licence Applications, Retention and Upgrading General

a. With the exception of first-time applicants for a Race, Kart or Stage Rally licence all applicants must complete an **Application** for **Competition Licence** Form provided by the **ASN** and pay all relevant fees. An incomplete application will be rejected.

b. Any changes to the wording on the official form will make it null and void.

c. Guidance on the **Application** process is provided on the **ASN** website.

1. Retention and Downgrading

1.1. An applicant may retain their licence if they meet the criteria set out below. If an applicant for whatever reason does not qualify to retain their current licence grade they will be automatically downgraded according to these **Regulations**.

1.2. Upon renewal an applicant may voluntarily take out a licence of lesser grade than that to which they are entitled.

1.3. Upon receipt of a written request, an existing licence holder who wishes to exchange their licence for one of lesser grade may do so but only once during the year.

1.4. The charge for downgrading a current **Licence** will be the payment of the downgrade fee as per Ch.1 App.2 and forfeit of the cost difference (if any) between the two licences. Any subsequent upgrade will be charged in accordance with Ch.1 App.2.

1.5. In conformity with FIA Appendix L the following definitions apply in respect of International **Licence** upgrade qualification:

1.6. **Circuit Competition**s: Refers to **Competition**s or Cars on Circuits (according to Appendix O, Art. 2): Karting, Single-Seaters, Prototypes, GT, Touring Cars, Autocross, Rallycross, Historic Circuit, Trucks and Drifting.

1.7. Road **Competition**s: Refers to **Competition**s or Cars on closed or open roads (Rally, Cross-Country, Hill Climb and Historic Rally).

1.8. For a licence qualification **Competition** to be considered achieved, the driver must actively enter the **Competition** and be classified in the Official Final Classification of the **Competition** (list of results) (Heats are not eligible).

2. Upgrading Procedure

2.1. **Competitors** wishing to collect signatures for upgrading their **Competition Licence** must use the Upgrade Card. For the Upgrade Card to be valid it must be signed in ink and must bear a passport type photograph of the holder, which must be permanently fixed to the Upgrade Card in the space provided.

2.2. A **Competition Licence** may be upgraded on renewal providing the Upgrading criteria detailed in this section, have been met and the relevant evidence of performance and required upgrading fee are provided to the **ASN** with the relevant complete **Application** form

2.3. The upgrading of a current **Competition Licence** the **Competitor** applicant must complete an application form which can be found at www.motorsportuk.org within the competitor resource centre and forward it, together with the current **Competition Licence** and any other appropriate licences and / or Upgrade Card containing the necessary signatures with the required payment to the **ASN Licence** Section.

2.4. The payment is calculated as the difference between the cost of the existing licence and the new licence plus the upgrading fee as detailed in Ch.1 App.2.

2.5. A request for an upgrading signature has to be made to the **Organiser**s, and if the results of the **Event** show that the **Competitor**'s performance was satisfactory, their Upgrade Card will be signed by the **Clerk of the Course** in the space provided. A maximum of two signatures may be obtained at a car race or Race Venue Kart **Event**, a third signature may be sought for a full-days' marshalling at that same **Event** with the approval of **Clerk of the Course.**

2.6. In the case of **Kart Races** only the **ASN Steward of the Event** is empowered to sign and only one signature per **Event** is permitted, (**Kart Endurance, Kart Clubman** or **Bambino Kart** signatures are not accepted to upgrade a Kart Race **Licence**).

2.7. In exceptional circumstances only documentary evidence, such as printed official **Results** sheets may be considered as proof of performance for upgrading. Results which predate the **Competitor's** last upgrade will only be accepted where the total number of results obtained is sufficient to meet the upgrade criteria from the basic competition licence for that discipline to that **Licence** grade being requested.

CHAPTER 6 LICENSING

Appendix 5 - Competition Licence Applications, Upgrading, Downgrading and Retention of Licences – Race

1. A **Competitor** making an application for the first time for a Race licence must obtain from **ASN** a novice race driver 'Go Racing **Driver** Pack', which contains the required application form, and then complete an approved course at a school registered with the Association of Racing **Driver**s' School (ARDS). The procedure to be followed is contained in the 'Pack'.

2. **Competitors** who have reached their 14th Birthday may apply for a **Race Club Licence** to allow them to race only in **Junior Race Formulae** specifically authorised by the **ASN**. The **Licence** application must be endorsed and submitted to the **ASN** by a **Junior Race Championship Organising Club**. This **Licence** will state **'Junior Championship UK only'.**

3. Exemptions from Art. 1 above are as follows:

    a. Anyone who has held a **Race National B** or **Interclub Licence** at any time during the preceding 3 years. **Competitors** who have not renewed or held a **Race National B** or **Interclub Licence within the preceding 3 years** must comply with the requirement for first time applicants detailed above.

    b. *Anyone who can provide proof of having ever held or entitled to hold a **Race Licence** of higher status than **Restricted, National 'B'** or **Interclub**. **Competitors** who have not renewed their licence for five years or more will be required to pass the **ARDS** written examination.

    c. *Anyone who has held a **Competition Licence** during the previous two (2) years and can produce written proof of having been classified as a finisher in at least eight **Rallycross** or five **Time Attack Hot Lap Challenge Events** during that time and who passes a written examination.

    d. *Anyone who is entitled to an **International 'ITE' Kart Licence** and who passes a written examination.**

    e. *Anyone who, being a foreign national, can produce proof from their **ASN** that they have the necessary racing experience.

    f. *Anyone during the year of their 16th birthday who is entitled to a **Kart International 'ITE Licence** (or is otherwise approved by the **ASN**) and who passes a written examination. The **Race Club Licence** will be issued to the **Race Organising Club**. The use of this **Licence** will be restricted to specifically authorised **Race Championships** and will be held by the **Club** until the **Competitor** reaches their 16th birthday.**

    g. *A **Race National Licence** may be applied for by:

    h. A holder of an **International Competition Licence** issued by the **Auto Cycle Union** and provided that proof is produced of competing in **International** motor cycle racing during the preceding five years

* As the written examination is based on the **NCR** and other information contained in the 'Go Racing **Driver** Pack', it is recommended that the pack is purchased in these exemption categories.

** For those applicants who have no competition car driving experience or who do not hold a road driving licence no exemption from the **ARDS** course is permitted. Proof of **Competition Vehicle** driving experience will be required to accompany the application for a **Vehicle Racing Licence.**

4. Racing Licences - How to Retain a Licence

4.1. A **Competitor** who is unable to retain their Race licence as mentioned below may be required to pass a course at an Association of Racing **Driver**s' School. Exemptions to this requirement are as detailed in Art. 3 of this section. **Competitors** qualified to retain a **National** 'A' or higher licence, who have not renewed their licence for five years or more will be required to pass the ARDS written examination.

4.2. A **Competitor** who held a **Race Club** licence within the preceding three years may apply for a **Race Club** licence for the current calendar year. .

4.3. A **Competitor** who can provide proof of having ever held a Race International ITD-C licence, Race **National** or **National** 'A' licence may apply for a **Race Club, Race National** or **Race International 'ITD-C'** licence during the current calendar year.

4.4. A **Competitor** who can provide proof of ever having held a Race International 'ITC-C' licence may apply for a **Race International 'ITC-C'**, **Race International 'ITD-C', Race National** or **Race Club** licence in the current calendar year.

4.5. A **Competitor** who can provide proof of ever having held a Race International 'ITA' or 'ITB' licence may apply for a **Race International 'ITC-C', Race International 'ITD-C', Race National** or **Race Club** licence in the current calendar year. Special arrangements exist for retaining an **International 'ITA'** or **'ITB'** licence and are contained in **Appendix L** of the **Code**.

5. Racing Licences – How to Upgrade a Licence

5.1. Please note that **Rallycross** signatures are NOT acceptable for upgrading any **Race** licence.

5.2. **Race Club** to **Race National A Competitor** who is qualified to hold a current **Race Club** licence may upgrade it to **Race National** licence either at renewal or during the year as follows:

a. Obtain **Clerk of the Course's** signatures on the **Upgrade Card** certifying that the qualifying events have been successfully completed. These are 6 **Interclub Races** (including **Junior Race** signatures) and must not contain more than 1 signature from **Races** organised by or on behalf of **Racing Schools** which form part of a school course or curriculum.

b. One of the **Clerk of the Course** signatures required for having successfully completed a **Race** may be replaced by a **Clerk of the Course** signature recorded on the **Upgrade Card** for completing a day on a **Marshal's** post during at a **Race Event**.

5.3. One of the **Clerk of the Course** signatures for having successfully completed a **Race** may be replaced with a signature recorded on the **Upgrade Card** for having successfully completed an **ARDS** Advanced Course.

5.4. Exceptionally, and for drivers having first satisfactorily completed an ARDS Advanced Course, these races may be part of a **National** status **Championship**, designated specifically by the **ASN** for this purpose, and in which the candidate may participate with a **Race Club** licence for one season only.

5.5. **Race National to Race International 'ITD-C'**. A **Competitor** who is qualified to hold a current **National Race** licence may upgrade it to **Race International 'ITD-C'** licence either at renewal or during the year, without any further qualification.

5.6. Upgrade to Race International 'ITC-C'':

5.7. A **Competitor** who is qualified to hold a current **Race Club** licence may upgrade it to **Race International 'ITC-C'** licence either at renewal or during the year having satisfactorily competed in at least 10 events (irrespective of discipline) at least 5 of which must be circuit **Competitions** within two years prior to application.

5.8. A Competitor who is qualified to hold a current **International 'ITD-C'** licence may upgrade it to **Race International** '**ITC-C'** licence either at renewal or during the year having satisfactorily competed in at least 5 circuit **Competitions** within two years prior to application.

5.9. A **Competitor** who is qualified to hold a current **Kart International 'ITE'** may upgrade it to **Race International 'ITC-C'** having passed a written examination. and competed satisfactorily in at least 10 circuit **Competitions** within two years prior to application.

5.10. **Race International 'ITC-C' to Race International 'ITB'**. A **Competitor** who is qualified to hold a current **Race International 'ITC-C'** licence may upgrade it to **Race International 'ITB'** licence either at renewal or during the year in accordance with Appendix L of the **Code.**

5.11. **Race International 'ITB' to Race International 'ITA'.** In accordance with Appendix L of the **Code**.

5.12. First time applicants for an International licence must have undertaken the **FIA** e-learning safety training.

Truck Racing Licences

6. Truck Racing – How to Retain a Licence

6.1. Retention of a **Truck Racing Licence** is exactly the same as for a **Race Licence.**

7. Truck Racing – How to Upgrade a Licence

7.1. These are special **Licences** and the **National Truck Racing Licence** can only be issued to holders of a category C or CE RTA **Licence** who satisfies the criteria set out in 7.2 or 7.3 below.

7.2. A **Competitor** who is qualified to hold a **Race National** or **Race International Licence** and who must, when the issue of this **National Truck Racing Licence** is granted to the holder for the first time, satisfactorily participate in all pre-event practice / testing sessions at a minimum of their first two BTRC Events

7.3. A **Competitor** who must:

a. have satisfactorily completed an **ARDS** racing course; and

b. have satisfactorily completed the race truck driving assessment at an approved **Truck Racing** venue as prescribed within the **Championship Regulations**.

Truck National to Truck International 'ITC-C'

7.4. A **Competitor** who satisfies the requirements of Arts.7.2 or 7.3 above, may apply for the **Truck International 'ITC-C'** having satisfactorily competed in at least 5 circuit **Competitions** within the two years prior to application.

7.5. First time applicants for an **International Truck** licence must have undertaken the **FIA** e-learning safety training.

CHAPTER 6 LICENSING

Appendix 6 - Competition Licence Applications, Upgrading, Downgrading and Retention of Licences – Kart

1. National Schools Karting Association

1.1. The **ASN** waives the requirement to hold a **Competition Licence** for **Competitors** who hold a **National** licence issued by the **National** Schools Karting (NatSKA) in accordance with their rules which have been agreed with the **ASN**.

2. Kart Licences

2.1. A **Competitor** making an application for the first time for a **Kart** (not **Kart Clubman**) licence must obtain from the **ASN** a novice **Kart Driver** 'Starting Karting Pack', which contains the required application form and then complete an approved course at a school registered with the **Association of Racing Kart School (ARKS).** The procedure to be followed is contained in the 'Pack'.

2.2. Exemptions are as follows:

a. Anyone who has held a **Kart Interclub Licence** at any time during the preceding three years **Competitors** who have not renewed or held an **Interclub** or **National 'B' Licence within the preceding 3 years** must comply with the requirement for first time applicants detailed above.

b. *Anyone who can provide proof of having ever held or entitled to hold a **Kart** or **Race Licence** of higher status than **Restricted**, **National 'B'** or **Interclub**. **Competitors** who have not renewed their licence for 5 years or more will be required to pass the **ARKS** written examination.

c. Anyone who can provide proof of having ever held a **Kart Clubman** or KX licence and can produce written proof of having been classified as a finisher in at least 6 **Kart Endurance**, **Kart Tyro / Clubman** or **KX races** held under the jurisdiction of **ASN** during the preceding 3 years. (The 'Starting Karting Pack' is required in this instance and the driver will be required to pass the **ARKS** written examination.)

d. Anyone who can provide proof of having ever held an RS **Club**man **Licence** and can produce written proof of having been classified as a finisher in at least 6 Super KX races held under the jurisdiction of the **ASN** during 2022, 2023 or 2024. They will not be required to undertake the ARKS test and will not be considered a novice under **Ch.18 App.7 Art.5.4**.

e. Anyone who can provide proof of holding a **National Schools Karting Association (NatSKA) National Licence** during the preceding 3 years

f. *Anyone who can provide proof of having satisfactorily completed eight qualifying kart races (as approved by **ASN**), a minimum of four of which must be outdoor races. (The 'Starting Karting Pack' is required in this instance and the **Driver** will be required to pass the **ARKS** written examination.)

g. Anyone who being a foreign national can produce proof from their **ASN** that they have the necessary Karting experience.

2.3. A **Kart National Licence** may be applied for by a holder of a **National Competition Licence** issued by the **Auto Cycle Union** providing that proof is produced of competing in **National** motorcycle racing during the preceding three years. This is also subject to passing the **ARKS** written examination.

*As the written examination is based on the **National Competition Rules** and other information contained in the 'Starting Karting Pack' it is recommended that the pack is purchased in these exemption categories.

Kart Licences

3. Kart – How to Retain a Licence

3.1. Note: A **Competitor** who is unable to retain their Kart licence as detailed below may be required to pass a course at an Association of Registered Kart Schools (ARKS). Exemptions to this requirement are detailed in 8.3 of this Section. **Competitor**s qualified to retain a **National** or higher licence, who have not renewed

their licence for 5 years or more will be required to pass the ARKS written examination.

3.2. A **Competitor** who held a **Kart Interclub** licence during the preceding three years may renew it for the current calendar year

3.3. A **Competitor** who has ever held a **Kart National** or **National 'A'** licence may renew it for the same or lower grade during the current calendar year.

3.4. A **Competitor** who has ever held a **Kart International** licence may renew it for the same or lower grade of licence during the current calendar year.

4. Kart – How to Upgrade a Licence

4.1. Please note that **Kart Endurance, Kart Clubman** (with the exception of upgrade **Kart Interclub** to **Kart National**) or **Bambino Kart** signatures are NOT acceptable for upgrading any **Kart Licence**.

Kart Interclub

Kart Interclub (Valid Bambino Only) to Kart Interclub

4.2. A **Competitor** who holds an **Interclub (Bambino Race) licence** may exchange it for a **Kart Interclub** licence (if qualified to enter **Cadet Classes**). They will be a novice until having satisfactorily completed five races.

Kart Interclub to Kart National

4.3. A **Competitor** who is qualified to hold a **Kart Interclub** licence may upgrade it to a **Kart National** licence either at renewal or during the year as follows: Obtain the **ASN Steward's** signature on the **Upgrade Card** at ten **Clubman** (prior to 31.12.2019) or **Interclub Kart Races**. One of these signatures may have been obtained at NatSKA or Kart **Clubman Events** held under an **ASN Permit**. A maximum of six signatures may have been obtained at **Super K-X Event**s. Completion of the **ARKS** Course will constitute one of the ten signatures. Signatures must have been obtained at a minimum of three different venues; a maximum of one **Super K-X** venue will be counted for upgrading purposes. For **Competitors** in **Race Venue Events** only two different venues are required so long as the application is supported by a **Race Venue Karting Organising Club**. For upgrades containing both **Short Circuit** and **Race Venue Karting** signatures the minimum of three different venues is required. A **Competitor** may only obtain one signature per **Event.**

Kart National to Kart International 'ITG', 'ITF' or 'ITE'

4.4. A **Competitor** who is qualified to hold a **National Kart** licence may upgrade it to an **International 'ITG', 'ITF'** or **'ITE'** licence either at renewal or during the year having completed at least five **Competitions** as follows:

4.5. An **International 'ITG'** licence can be issued to **Drivers** between 11 (reaching their 11th birthday before 1st January of the year of participation) and 14 (reaching their 14th birthday during the calendar year) when the **Licence** is issued (the drivers weight (including **Driver's** equipment) must be a minimum of 35kg at all times during **Competition**).

4.6. An **International 'ITF'** licence can be issued to **Drivers** between 13 (reaching their 13th birthday before 1st January of the year of participation) and 15 (reaching their 15th birthday during the calendar year) when the **Licence** is issued (the drivers weight (including **Driver's** equipment) must be a minimum of 40kg at all times during **Competition).**

4.7. An **International 'ITE'** licence can be issued to drivers aged 14 (reaching their 14th birthday before 1 January of the year of participation).

Application must be made in accordance with the current **FIA Karting Regulations**.

4.8. First time applicants for an **International** licence must have undertaken the **FIA** e-learning safety training.

CHAPTER 6 LICENSING

Appendix 7 - Competition Licence Application, Upgrading Downgrading and Retention of Licence – Rallying

1. Stage Rally Licences

1.1. A **Competitor** making an application for the first time for an **RS Stage Rally** licence must obtain a novice stage rally 'Go Rallying Pack', which contains the required application form, from the **ASN** and then complete an approved course at a school registered with the British Association of Rally Schools (BARS). The procedure to be followed is contained in the 'Pack'. Exemptions are as follows:

1.2. Anyone who has ever held a **Non-Race National 'B'** licence or higher, or equivalent, valid for driving on Special **Stage Rallies** held before 31 December 2001.

1.3. Anyone who has ever held a Restricted or **National Rally** licence.

1.4. Anyone who, being a foreign national, can produce proof from their **ASN** that they have held a licence valid for driving on **Special Stage Rallies** or **Hill Rallies**.

1.5. The **RS National Navigator Licence** is not valid as a **Driver's** licence at any grade of **Event.**

2. Rallying – How to Retain a Licence

NOTE the **RS National Navigator's Licence** is not valid a **Driver's Licence** at any grade of **Event.**

a. A **Competitor** who is unable to retain their **RS Stage Rally** licence as detailed below may be required to pass a course at a British Association of Rally Schools (BARS). Exemptions to this requirement are as follows:

b. A **Competitor** who has ever held a non-**Race National 'B' Licence** or higher or equivalent valid for driving on **Special Stage Rallies** held before 31 December 2001.

c. A **Competitor** who has ever held a Restricted or **National Rally Licence**.

2.1. A **Competitor** who being a foreign national can produce proof from their parent **ASN** that they have held a **Licence** valid for driving on Special Stage Rallies or **Hill Rallies**.

2.2. A **Competitor** who can provide proof of having ever held a **National** or **National 'A' Rally** licence may renew it for an **RS National Stage Rally** or **International 'ITD-R' Rally.**

2.3. A **Competitor** who can provide proof of having ever held an **International Rally** licence may renew it for an **International 'ITC-R' Rally** licence.

2.4. A **Competitor** who can provide proof of having ever held an **International Historic Rally** licence may renew it for a **Rally International 'ITD-R** or an **RS National Stage Rally** licence.

3. Rallying – How to Upgrade a Licence

3.1. Please note that **Speed, Rallycross** or **Cross Country** signatures are NOT acceptable for upgrading any **RS Interclub Stage Rally** or **National Stage Rally** licence.

RS Interclub - Stage Rally to RS National - Stage Rally

3.2. A **Competitor** who is qualified to hold a current **RS Interclub - Stage Rally** licence may upgrade it to an **RS National Stage Rally** licence either at renewal or during the year by obtaining **Clerk of the Course** signatures on the **Upgrade Card** certifying that six rallies of which at least three are **Special Stage Rally Events** have been completed.

3.3. One of the **Clerk of the Course** signatures for having successfully completed a **Stage Rally** may be replaced with a signature for having successfully completed a BARS Advanced Course.

RS National Stage Rally to Rally International 'ITD-R'

3.4. A **Competitor** who is qualified to hold a current **RS National Stage Rally** licence may upgrade it to a **Rally International 'ITD-R** licence either at renewal or during the year or being entitled to hold the **Kart International 'ITE'** licence without further qualification and having satisfactorily passed the BARS test.

Upgrade to Rally International 'ITC-R'

3.5. A **Competitor** who is qualified to hold a current **RS Interclub Stage Rally** licence may upgrade it to an **International 'ITC-R'** licence either at renewal or during the year having satisfactorily competed in at least ten competitions a minimum five of which must be **Road Competitions** within the two years prior to application.

3.6. A **Competitor** who is qualified to hold a current **Rally International 'ITD-R'** may upgrade it to an **International 'ITC-R'** licence either at renewal or during the year having competed in at least five **Road Competitions** within the two years prior to application.

RS Interclub or equivalent to RS Interclub – Stage Rally and above

3.7. Follow the procedure for applicants for a **Stage Rally** licence detailed in **Art.1** and then proceed as in **RS Interclub Stage Rally** to **RS National Stage Rally**, **RS National Stage Rally** to **Rally International 'ITD-R'** or to **Rally International 'ITC-R'** above.

RS National Navigator to Rally International 'ITD-R' or to Rally International 'ITC-R'

3.8. Follow the procedure for applicants for a **Stage Rally** licence detailed in **Art.1** and then proceed as in **Art.3.7 above**.

Adding an RS National Navigator

3.9. **Competitor**s may add an **RS National Navigator** licence to an **RS Clubman** or **Interclub** licence at time of renewal or during the year on payment of the fee as detailed in **Ch.1 App.2**.

3.10. The **RS Rally National Navigator Licence** is not valid as a driver's licence at any grade of event.

3.11. First time applicants for an International licence must have undertaken the FIA e-learning safety training for roads.

CHAPTER 6 LICENSING

Appendix 8 - Competition Licence Applications, Upgrading, Downgrading and Retention of Licences – RS Licences

1. How to Retain a Licence

1.1. A **Competitor** who has ever held a **Speed International, Speed National**, **Speed National 'A', Speed National 'A'** (OPEN) or **RS National** licence may renew it for the equivalent or a lower grade of licence.

1.2. A **Competitor** who can provide proof of ever having held a **National** or **National 'A' Rallycross** licence may renew it for the same or lower grade of **RS National** licence.

1.3. A **Competitor** who can provide proof of having ever held an **International Rallycross** licence may renew it for the same or lower grade of **RS National licence** or **International 'ITC-C' Off-Road** licence.

1.4. All other applicants can apply for an **RS Interclub** licence.

2. How to Upgrade a Licence

2.1. A **Competitor** who is qualified to hold a current **RS Interclub** licence may upgrade it to an **RS National** licence either at renewal or during the year by obtaining **Clerk of the Course** signatures on the **Upgrade Card** certifying that (as applicable):

a. six **Interclub Hill Climbs, Sprints** or **Hot Lap Challenge Events** have been completed. Signatures must have been obtained at a minimum of two different venues.

i. One of the six signatures required may be replaced by a signature from an **ASN Recognised Hillclimb** and **Sprint School** confirming successful completion of the school course.

ii. One of the **Clerk of the Course** signatures required for having successfully completed an **Event** may be replaced by a **Clerk of the Course** signature recorded on the **Upgrade Card** for completing a day on a marshal's post.

iii. OR obtain the **Clerk of the Course's** signatures on the **Upgrade Card** at six **Clubman** or **Interclub Autocross** or **Rallycross Events.**

b. six **Competitive Safaris** or **Hill Rallies** have been completed.

c. Or being qualified to hold an **RS National Stage Rally Licence** may upgrade to a **Rally International ITD-R Licence** at renewal or during the current year or being entitled to hold a **Kart International ITE Licence** without further qualification and having satisfactorily passed the BARS test.

d. Or any combination of the above.

RS Interclub to RS National (Drag) to International Drag 'IT DR'

2.2. To obtain a licence for **Drag Racing** higher than **Interclub**, a **Competitor** must submit with their application to upgrade, a letter of endorsement from a recognised **Drag Racing Club**. First time applicants for an International licence must have undertaken the **FIA** e-learning safety training.

RS National to Off Road International 'ITC-C'

2.3. A **Competitor** who is entitled to hold an RS **National** may upgrade it to **an Off Road International 'ITC-C'** having satisfactorily competed in at least 10 events (irrespective of discipline) at least 5 of which must be **Circuit Competition**s within two years prior to application.

RS Interclub or International 'ITF' licence to Off Road International 'Junior ITE'. This licence is valid for FIA Specified Categories only

2.4. **Driver**s having reached their 14th birthday before 1st January of the year of participation may apply to be issued the Off-Road 'Junior ITE' licence subject to having competed satisfactorily in at least five

Competitions.

RS National to Cross Country International 'ITC-R'

2.5. A **Competitor** who is qualified to hold a current **RS National** licence may upgrade it to an **International 'ITC-R' Cross Country** licence either at renewal or during the year by obtaining **Clerk of the Course** signatures on the **Upgrade Card** certifying two **Interclub Competitive Safaris** or one **National Competitive Safari** have been completed.

2.6. First time applicants for an **International** licence must have undertaken the **FIA** e-learning safety training.

CHAPTER 6 LICENSING

Annexe A - Licence Eligibility

Chart 1: Competitors Minimum Ages

DISCIPLINE	DRIVER	NAVIGATOR	FRONT PASSENGER	REAR PASSENGER	REMARKS
RACE					
Car Race	16				14 Junior Race Formulae only
Truck Race	18				18 min age on road
Kart Race L/C	16				210cc max to 17
Kart Race S/C	8				85cc gearbox from 13 Ch.18 App.9
Kart Tyro	11				
Kart Endurance	16				15hp per Kart
Kart Bambino	6				Special Conditions
RALLY					
Road Rally*	17+RTA	12		2	2-12 in a Child Seat
Navigation Rally*	17+RTA	12		2	2-12 in a Child Seat
Stage Rally	17+RTA	16			14 Junior Rally Championship only 14 Single Venue Navigator
TRIALS					
Car Trial**	14		12	2	2-12 in a Child Seat Ch.17 App.2 Art.11.2(a)
Classic Reliability Trial**	17+RTA		14	2	2-12 in a Child Seat Ch.17 App.2 Art.7.2
Sporting Trial**	16		14		
AUTOTEST					
Autotest	15				
PC Autotest/AutoSOLO***	13		12		13 up to 2000cc inc. forced induction
CROSS COUNTRY					
Hill Rally***	17+RTA	16			
Safari***	17+RTA		16		
Cross Country Tyro**	13		12	2	2-12 in a Child Seat Ch.20 App.8 Art.5.2
Cross Country Trial***	17		14		Junior Trials from 8-17
SPEED					
Sprint and Hillclimb	16				14 Junior Sprint only 14 Junior Hillclimb with Junior Sprint Experience
Minicross	14				
Autocross	16				Autocross - year of 14th Junior Autocross
Clubcross	14				
Rallycross	16				Rallycross - year of 14th Junior Rallycross
Drag Race	16				Junior Dragsters from 8

Passengers are ONLY Permitted in events indicated by: *, ** and ***

*** Rear passengers do NOT need a licence if under 18**

**** Front and rear passengers do NOT need a licence if under 18**

***** Driver and front passenger need licences**

Chart 2: Competitors Minimum Acceptable Licences

	EVENT STATUS (as defined by Supplementary Regulations			
MOTORSPORT DISCIPLINE	**CLUBMAN**	**INTERCLUB**	**NATIONAL**	**INTERNATIONAL**
AUTOTESTS	RS Clubman	Any Interclub		
ALL TRIALS (including Cross Country)	RS Clubman	Any Interclub		
NAVIGATION RALLY	RS Clubman	Any Interclub	Any National	
ROAD RALLY (including Targa, Historic and Endurance	RS Clubman	Any Interclub	Any National	
SAFARIS, TIME TRIALS, TEAM RECOVERIES, CHALLENGE EVENTS	RS Clubman	Any Interclub	Any National	Cross Country 'ITC-'R' or Stage Rally International 'ITC-'R'
HILL RALLIES	RS Clubman (6)	Any Interclub	RS National (5)	Cross Country 'R' or Stage Rally International 'ITC-'R'
CLUBCROSS	RS Clubman			
AUTOCROSS (including MINICROSS)	RS Clubman	Any Interclub		
HILL CLIMBS, SPRINTS		Any Interclub (6, 12)	RS National or Race National (6)	Speed 'ITD-R' or Race International
DRAG RACES		Any Interclub	RS National - Drag Endorsement	Drag International 'ITD-R'
RALLYCROSS		Any Interclub	RS National or Race National	Off-Road International 'ITC-C' Race International
STAGE RALLIES		RS Interclub - Stage Rally (4)	RS National - Stage Rally (5)	Rally International 'ITC-R'
STAGE RALLIES (HISTORIC)		RS Interclub - Stage Rally (4)	RS National - Stage Rally (5)	Rally International 'ITC-R'
KART ENDURANCE	Kart Clubman (7)			
KART TYRO	Kart Clubman (7)			
KART BAMBINO	Kart Clubman Bambino (9)			
RACE		Race Club	Race National	Race International (10)
RACE HISTORIC		Race Club	Race National	Race International (10)
RACE KART (11)		Kart Interclub or Race Club	Kart National or Race National	Kart International
RACE TRUCK		Race National - Truck Endorsement	Race National - Truck Endorsement	International Truck 'ITC-R'
KART KX & SUPER KX	RS Clubman or KX (13)			

NB

(1) A higher grade licence is always valid for lower permit events of the same discipline (exceptions see 8 below).

(2) Race licences are valid for speed events.

(3) Race (10), RS and RS Stage Rally licences are valid for Rallycross.

(4) Any Interclub/National, Race Club, RS Rally National Navigator and any International Licence is valid for Stage Navigator.

(5) Any National, RS Rally National Navigator and any International Licence is valid for Stage Navigator.

(6) RS National or Race National required for vehicles defined in **Ch.14 App.2 Art.1.2** of the Regulations.

(7) Kart Clubman licence is only valid for Kart Endurance/Kart Tyro events.

(8) Race National Licences also valid for Race Venue Kart events.

(9) A Kart Bambino event may accept any competitor until the 31st December in the year of their 8th birthday.

(10) Weight to power ratios have been imposed by FIA according to licence status. Unless otherwise stated reference to International Race requires a minimum licence status of International 'ITC-C' Race.

(11) For Race Venue Kart events either the endorsed "valid for Race Venue" Kart Licence or Race Licence, as specified above, is acceptable.

(12) RS Clubman licence may be presented for drivers within the Intro-Class.

(13) Kart KX and Super KX Events only

Chart 3: Minimum Acceptable Entrants' Licences

STATUS OF EVENT	NATIONAL	INTERNATIONAL UK	INTERNATIONAL OVERSEAS (NON-FIA CHAMPIONSHIP)	FIA CHAMPIONSHIPS
Cross Country	National Entrant	International Restricted Entrant	International Open Entrant	International Open valid for FIA
Speed	National Entrant	International Restricted Entrant	International Open Entrant	International Open valid for FIA
Rallies	National Entrant	International Restricted Entrant	International Open Entrant	International Open valid for FIA
Races	National Entrant	International Restricted Entrant	International Open Entrant	International Open valid for FIA
Kart Races	Kart Entrant	Kart Entrant	Kart International Entrant	International Open valid for FIA

NB: A higher grade licence is always valid for lower permit events of the same discipline.

Annexe B - Licence Structure

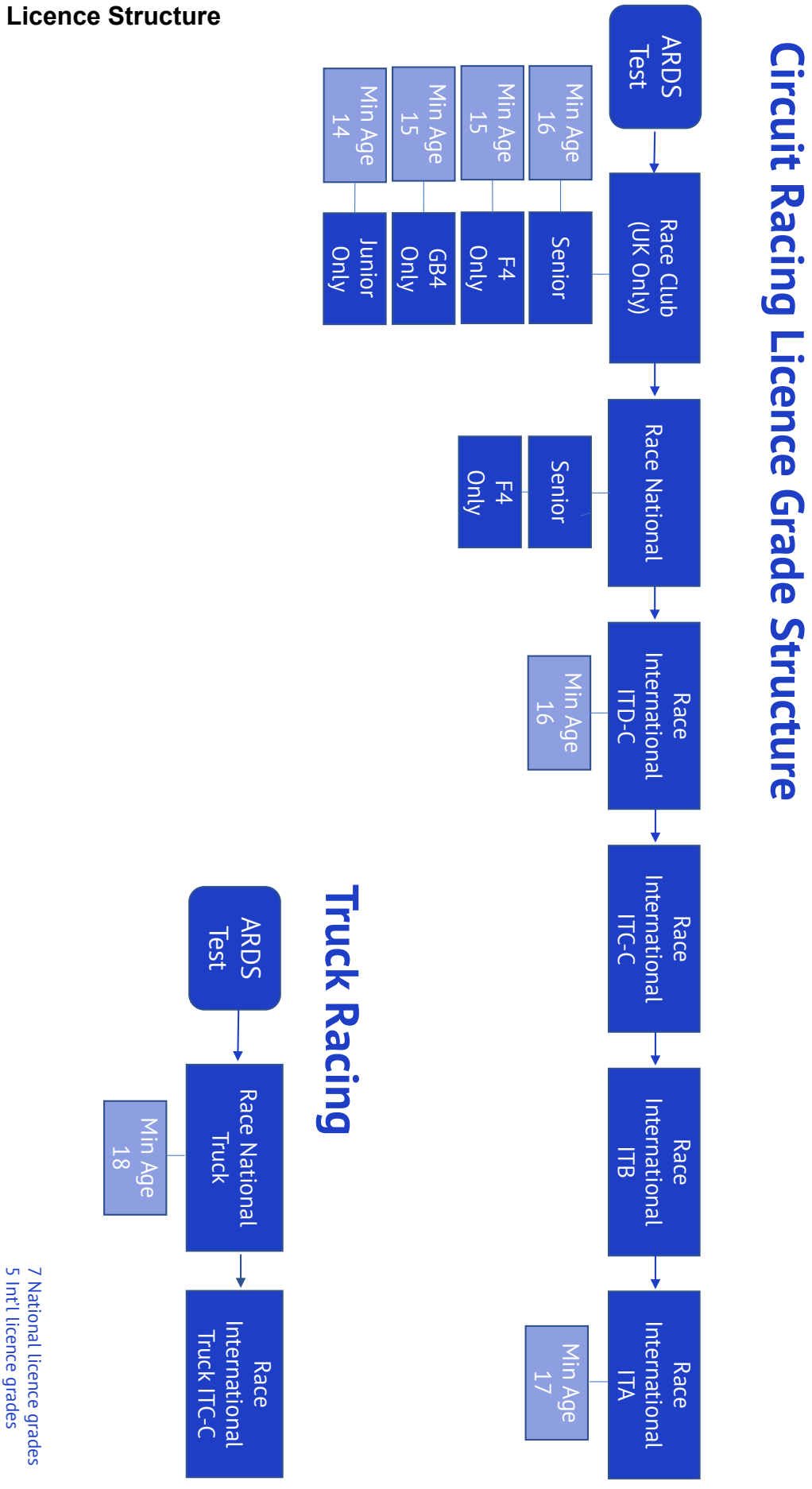

Upgrading Criteria – Circuit Racing

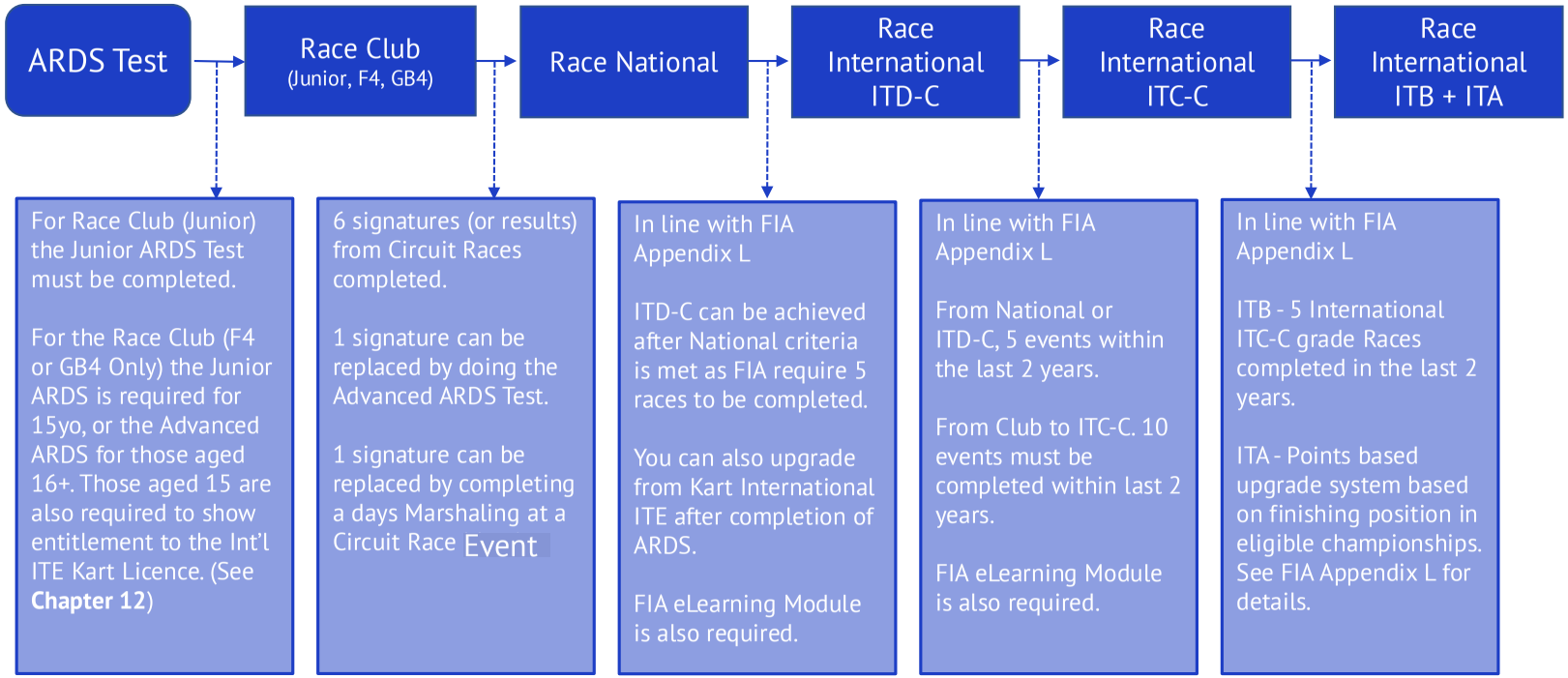

motorsport UK

Karting Licence Grade Structure

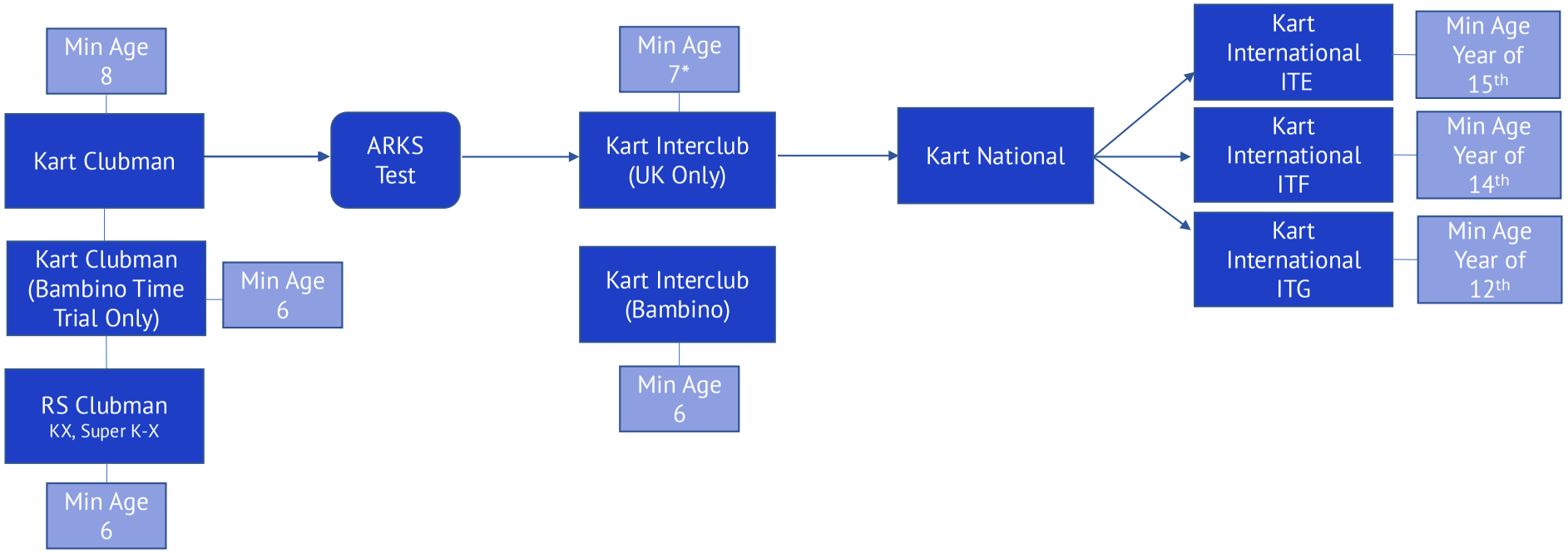

*Year of 8th birthday with x3 Bambino Racing signatures, otherwise minimum age 8

6 National licence grades incl RS Clubman
3 Int'l licence grades

motorsport UK

Upgrading Criteria – Karting

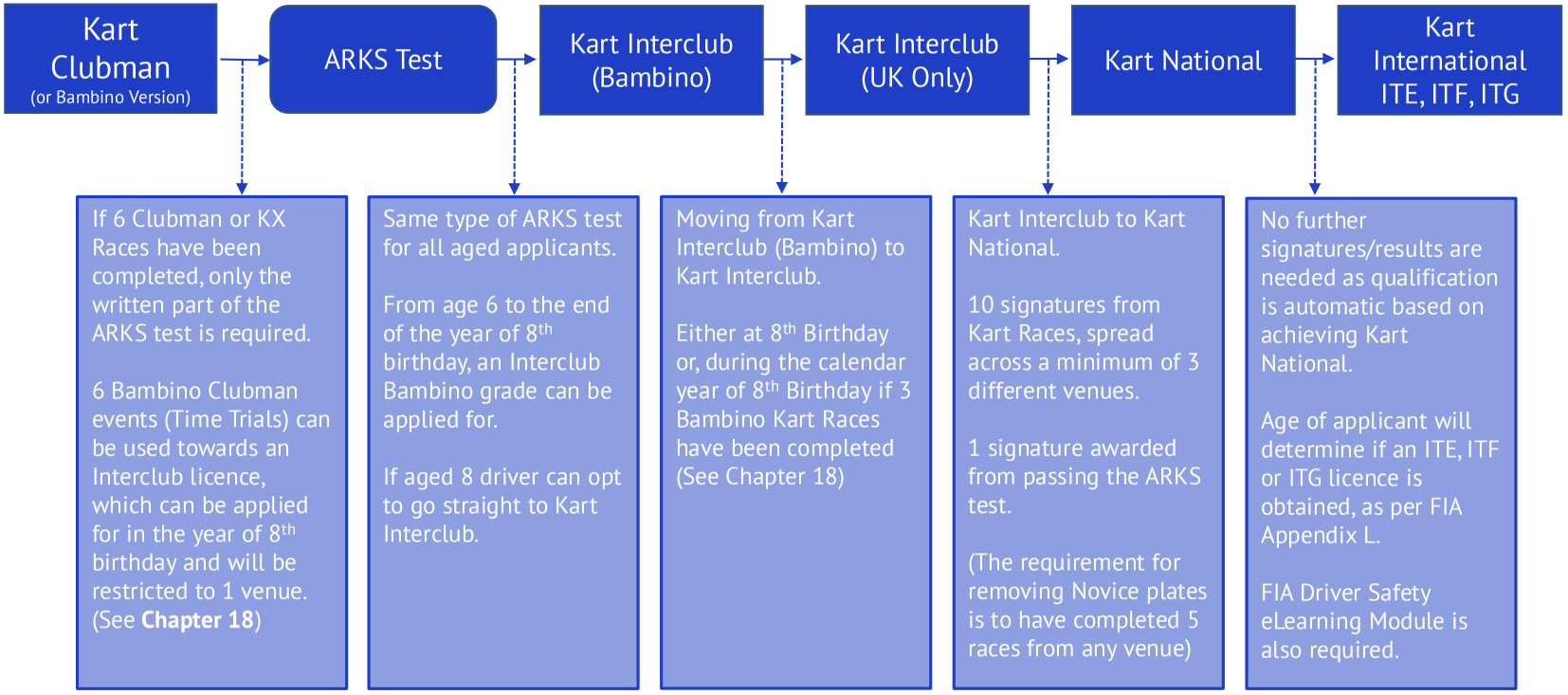

motorsport UK

Stage Rally Licence Grade Structure

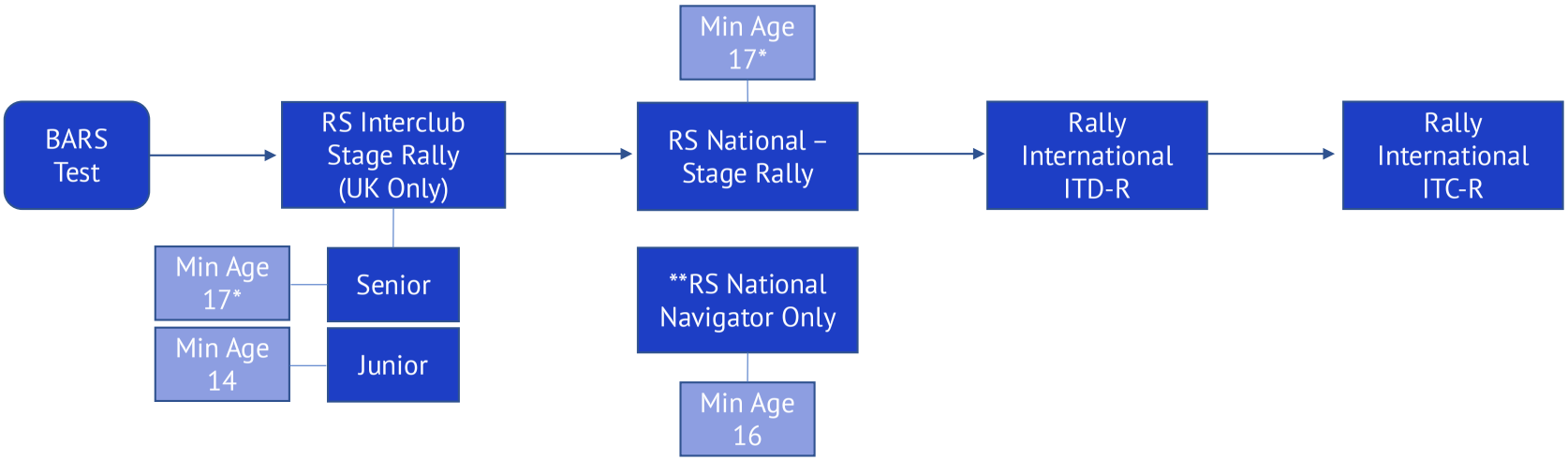

*Must Hold a valid RTA licence

**Does not require BARS test or previous experience

4 National licence grades
2 Int'l licence grades

motorsport UK

Upgrading Criteria – Stage Rallying

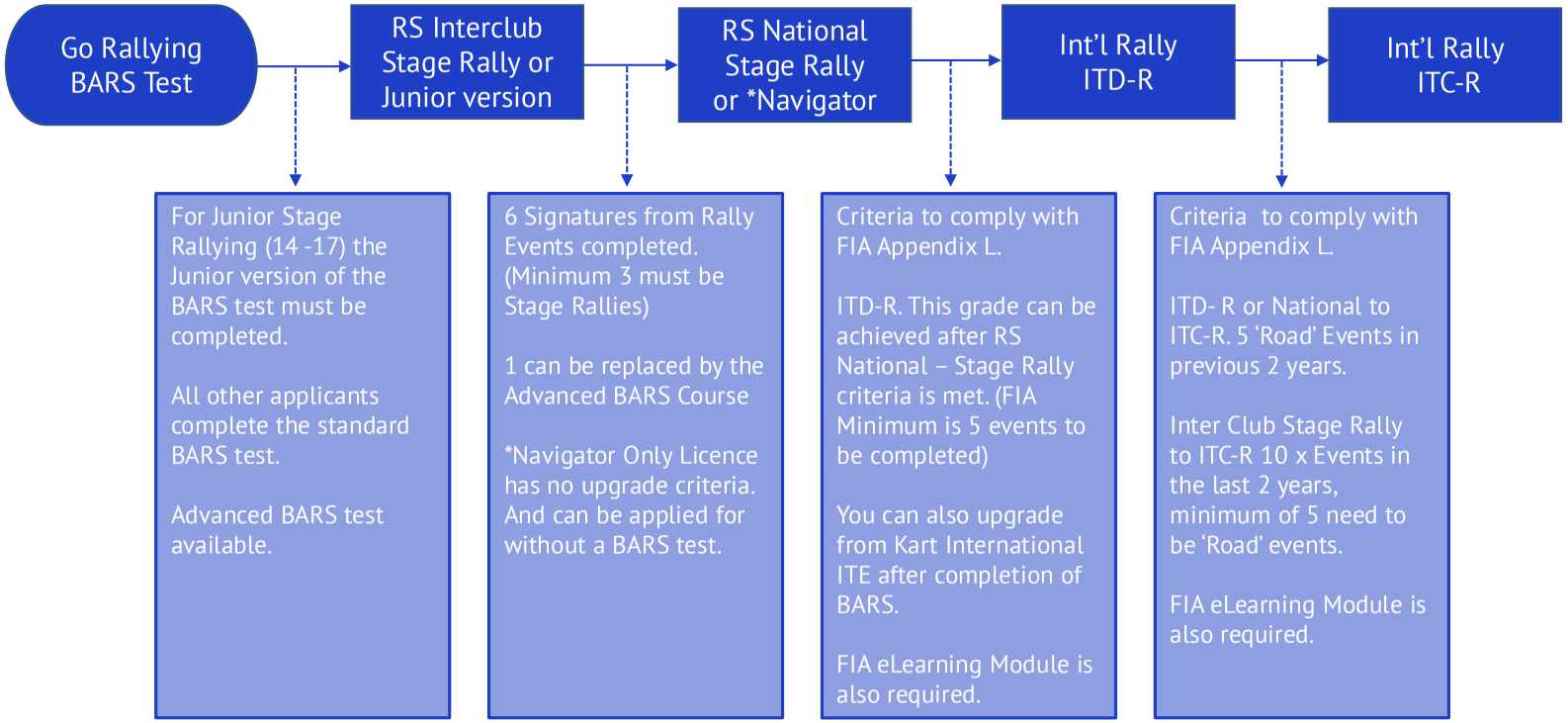

motorsport UK

RS Licence Grade Structure

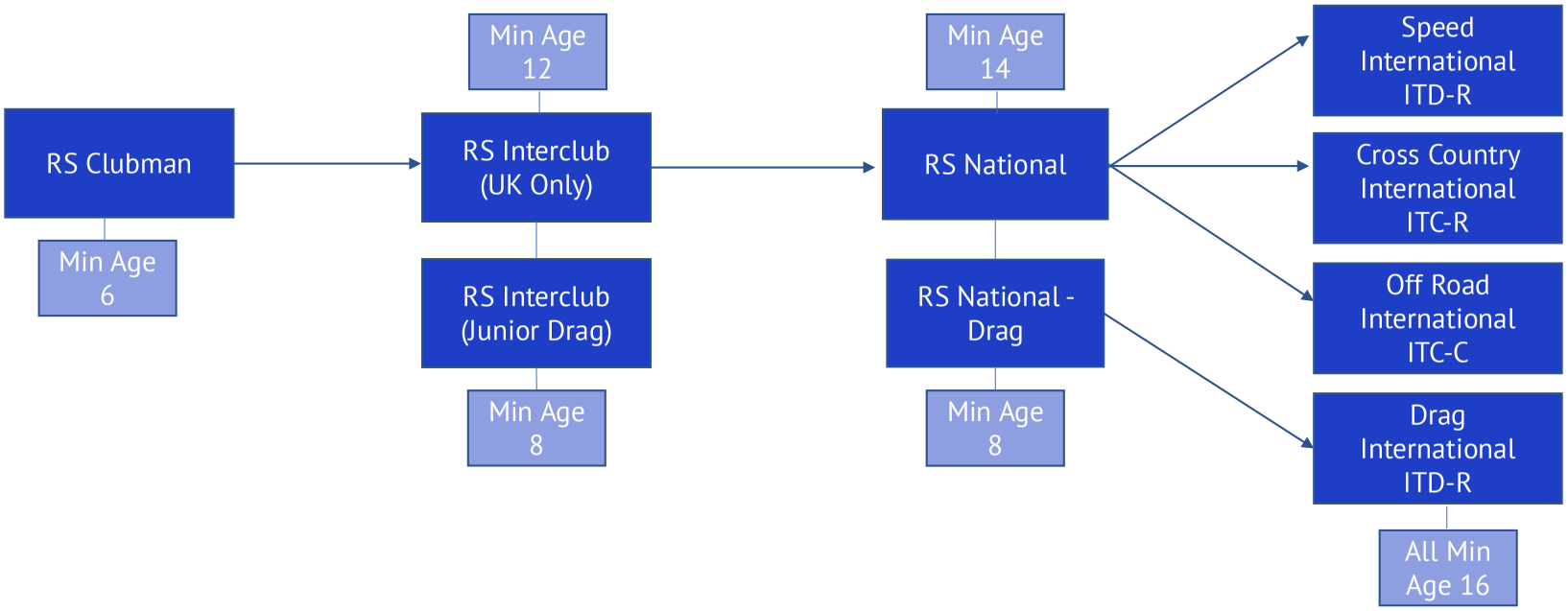

5 National licence grades
4 Int'l licence grades

Upgrading Criteria – RS

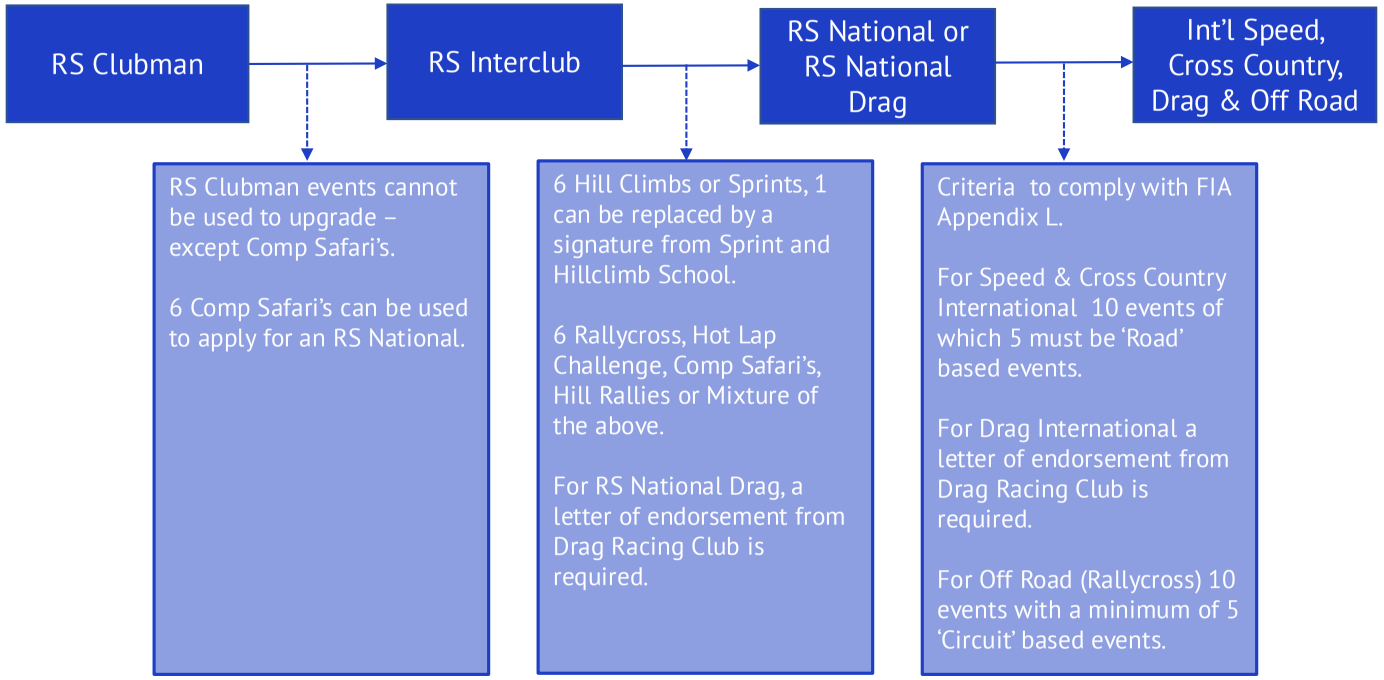

motorsport UK

Chapter 7

Competitor Vehicles and Vehicle Safety Equipment

CHAPTER 7 COMPETITOR VEHICLES AND VEHICLE SAFETY EQUIPMENT

This Chapter is separated into the following appendices:

App.1 **Competition Car Log Books (CCLB)** and **Vehicle Passports (VP)**.

App.2 General Technical Regulations.

App.3 Roll Over Protection Systems (ROPS).

App.4 Fuel and Fuel Systems.

App.5 Electrical Systems.

App.6 Fire Extinguishers and Systems.

App.7 Seats Harnesses and Headrests.

App.8 Exhaust Silencing and Noise Testing.

App.9 Onboard Cameras.

App.10 Competition Numbers.

App.11 Electrified Vehicles.

App.12 Scrutineering.

App.13 Charts and Diagrams.

1. General

1.1. **Vehicles** competing in **Events** must conform to the **Technical Regulations** and any specific discipline class regulations and **Championship Regulations** as appropriate. If it does not conform it will not be eligible to compete. Failure to conform is a breach of the **NCR** and may be subject of penalty (Ch.2) and guideline penalties at **Event** are provided by App. 13.

1.2. The deliberate presentation of a **Vehicle** or any component part of it that is not eligible under the applicable **Technical Regulations** is considered as a dishonest act offending the overarching principle of sporting fairness embodied in the **Code** and the **NCR** and will be referred to the **ASN Disciplinary Officer** and may result in the matter being referred to the **National Court** and the **Competitor** subject of interim suspension of **Competition Licence**. Non-deliberate matters will proceed in accordance with the relevant provisions of the **NCR** and guideline penalties are provided by App. 13.

1.3. The **ASN** reserves the right to amend these **Regulations** at any time on grounds of safety or in the interests of fair and orderly **Competition** (Ch.1 Art.1.4). Without prejudice to the generality of that reserved authority the **ASN** will normally provide for amended **Technical Regulations** to be published as effective from the next ensuing calendar year. Amendments to present **NCR** and this Chapter are published on the **ASN** website. It is the **Competitor's** responsibility to be aware of all applicable **Regulations.**

2. Specific Regulations

2.1. The general **Technical Regulations** applying to **Vehicles** are set out in App.1.

2.2. **Specific Regulations** are provided by the relevant Appendices of this Chapter and all **Official Documents** relating to **Technical** matters including **Championship Technical Regulations** and where applicable all discipline-related **Technical Regulations** and any relevant **FIA Homologation.**

2.3. Where **Supplementary Regulations (SRs)** leave any doubt as to the category in which a particular type of **Vehicle** falls for the purposes of the **Competition** the position shall be governed by the definitions set out in these **Regulations.**

2.4. **Competition Car Log Books** / **Vehicle Passports** are required for certain sporting disciplines as detailed in the **Specific Regulations**. **Vehicle Passports** are available from **International**, **National** and other approved **Scrutineers**. **Vehicle** inspections can be arranged by appointment with an appropriate grade local **Scrutineer.**

2.5. The **Specific Regulations** relating to **Competition Car Log Books** and **Vehicle Passports** are provided in App.1.

2.6. By reciprocal arrangement the **ASN** will recognise **Log Books** issued by **Motor Sport Ireland**. Such **Log Books** are considered valid for **Competitions** within the UK.

2.7. As a general principal of all **Technical Regulations** it is prohibited to carry out any tuning or modification unless expressly permitted by the relevant **Regulation(s)** or a component is stated to be 'free'.

2.8. **Specific Regulations** applying to **Vehicles** that are not powered exclusively by an internal combustion engine are to be contained in **Official Documents** and those **Vehicles** are additionally subject to the relevant provisions of Apps. 2 – 10 of this Chapter.

2.9. The **Regulations** for Electrified **Vehicles** are provided by App.11.

2.10. The **Regulations** for **Roll-Over Protection Systems (ROPS)** are provided by App.3.

2.11. The **Regulations** for **Fuel Systems** are provided by App.4

2.12. The **Regulations** for **Electrical Systems** except Electrified **Vehicles** are provided by App.5 Regulations for Electrical Systems except EV.

2.13. The **Regulations** for **Fire Extinguishers** and **Systems** are provided by App.6.

2.14. The **Regulations** for seats harnesses and headrests are provided by App.7.

2.15. The **Regulations** for exhaust systems and sound testing are provided by App.8.

2.16. The **Regulations** for **On Board Cameras** are provided by App.9

2.17. The **Regulations** for **Competition Numbers** are provided by App.10

2.18. All **Vehicles** must comply with the **Safety Regulations** as provided by their **Specific Technical Regulations** and **Apps. 2 – 10 of this Chapter.**

2.19. **Vehicle** occupants wearing normal **Personal Safety Equipment** (**Ch.9**) and seated in their normal position with safety harness fastened and the steering wheel in place must be able to evacuate the **Vehicle** in a maximum of 10 seconds

2.20. All **Vehicles** must be made available to the **Event Scrutineers** for examination and approval before taking part in any **Competition** or **Official Practice**.

Specific Regulations applying to scrutineering are provided by **App.12.**

The role and powers of **Technical Officials** are provided by **Ch.5** of these **NCR.**

If a **Competitor** has any doubt as to the conformity of the **Vehicle** or any component in it being used or intended to be used in **Competition** then the **Competitor** should consult and seek advice from a relevant **Scrutineer** (for example a **Championship Eligibility Scrutineer)** or the **ASN.**

CHAPTER 7 COMPETITOR VEHICLES AND VEHICLE SAFETY EQUIPMENT

Appendix 1 - Competition Car Log Books (CCLB) and Vehicle Passports (VP)

Note: These **Regulations** may be amended or replaced by **Regulations** relating to a digital **Vehicle Scrutineering Record.**

1.1. To obtain a **Vehicle Passport**, a registration document (where appropriate) for the **Vehicle**, or **Vehicle** identity number is required. Recent good quality colour photographs showing the **Vehicle** static, unoccupied and in tyre contact with the ground must be shown on the **CCLB / VP**. Photos for **VPs** must include a front 3/4 view from right side, rear 3/4 view from left side (both with number plate legible where applicable) and an engine bay view.

1.2. **CCLB / VP** continuation sheets may be obtained from the **ASN.**

1.3. **CCLBs** / **Vehicle Passport**s refer to complete cars and must not be transferred with a bodyshell.

1.4. Any **CCLB / VP** issued will remain the property of the **ASN**, which reserves the right to withdraw or suspend it at any time, stating the reasons why.

1.5. **CCLBs/VPs** must be sent to the **ASN** for any of the following reasons:

a. Issue of new **VP**.

b. Change of engine type or capacity.

c. Change of bodyshell.

d. Change of ownership.

e. Change of address.

f. **Vehicle** disposal or dismantling.

g. Change of **Vehicle** colour (with new photos).

1.6. **CCLB** continuation sheets may be obtained from the **ASN.**

1.7. **CCLBs** first issued prior to 31 December 2025 have now expired.

1.8. Once a **CCLB** has expired a new **Vehicle Passport** will need to be applied for.

1.9. Until the date of expiry a **CCLB** may continue to be returned to the **ASN** for amendment as provided above.

1.10. **Vehicle Identification Stickers** for the purposes of **Event Scrutineering** record keeping are required for certain sporting disciplines as detailed in the **Specific Regulations.**

1.11. **Event Scrutineering** records are associated to the **Vehicle Identification Sticker** and held centrally by the **ASN**. **Vehicle Event Scrutineering** records are accessible by selected **Scrutineers.**

CHAPTER 7 COMPETITOR VEHICLES AND VEHICLE SAFETY EQUIPMENT

Appendix 2 - General Technical Regulations

1. The following **Technical Regulations** are mandatory and apply to **Vehicles** in all forms of **Competition** (other than **Karting**). **Vehicles** must also comply with the appropriate **Specific Technical Regulations**. Where there are several regulations concerning any particular subject it shall be taken as a general principle that one does not override another unless specifically stated.

2. As a general principle in all **Technical Regulations** it is prohibited to carry out any tuning or modification that is not specifically permitted. The fact that some modifications are mentioned as prohibited does not imply that others are allowed.

3. Disabled **Drivers** (Ch.6**)** are permitted to make modifications approved by the **ASN** solely for the purpose of enabling operation of the **Vehicle** control systems.

4. Scrutineering (See also **Ch.7 App. 12 Applies**)

5. Before taking part in any **Competition** or **Practice** for any **Competition** all **Vehicles** must be presented to the **Event Scrutineers** for examination and approval

Specific elements

6. Chassis / Body (including aerodynamics) Must:

6.1. Be fitted with bodywork including a **Driver** (and **Passenger**) compartment isolated from the engine, fluid filled batteries, gearbox, hydraulic reservoirs (with the exception of fire extinguishers) pressurised above atmospheric, pressure pneumatic reservoirs and accumulators, transmission shafts, chains, belts and gears brakes, road wheels, suspension components including their operating linkages and attachments, petrol/fuel tanks, oil tanks, water header tanks, catch tanks and fuel system components (other than where such components comply with **App.4 Arts.5.1** and / or **5.2**) such as to prevent there being a hazard.

6.2. Except for **Vehicles** of Periods A-E front engine **Vehicles** to be fitted with a bonnet covering the engine and all its' major components.

6.3. Except for **Vehicles** of Periods A-E exposed transmission shafts, gears and chains must be guarded so as to prevent any hazard.

6.4. Where a radiator is not isolated from the **Driver / Passenger** compartment a suitable deflector must be fitted to prevent fluid directly coming into contact with the **Vehicle's** occupants.

6.5. Except for **Vehicles** of Periods A to E and which in period specification were not equipped with a bonnet or casing of metal or solid fire-resistant material covering and surrounding the main engine structure have a protective bulkhead of non-flammable material between the engine and the **Driver / Passenger** compartment capable of preventing the passage of fluid or flame. Gaps must be sealed with suitable flame proof material that completely closes any gap at all times.

6.6. Magnesium is prohibited for bulkheads.

6.7. Have a complete floor of adequate strength rigidly supported within the **Driver / Passenger** compartment.

6.8. Not have the space normally occupied by **Passengers** encroached upon in such a way that may impede extrication of the **Driver** from that side but may have the **Passenger** seats removed.

6.9. Except for racing cars or cars of A to D be equipped on all wheels with mudguards which present no sharp edges and cover the complete wheel (flange+rim+tyre) around an arc of 120 degrees. This minimum coverage must:

a. be achieved with a continuous surface of rigid material within which ventilation louvres may be fitted. The tyre must not be visible when viewed from above. When viewed from the rear the tyre must not be visible above any point 50mm or more above the axle centre line

b. extend forward ahead of the axle line

c. extend downward behind the wheel.

6.10. **Aerodynamic devices** may only be fitted to Racing and Sports Racing Cars (unless prohibited by an Approved Formula) or where specifically permitted where FIA homologated or where complying with National type approval.

6.11. Such devices must not extend beyond the maximum width of the **Vehicle** above the maximum height of any roof or for an open car the maximum height of the ROPS.

6.12. **For Saloon and Sports Cars** such devices must not extend longitudinally from the bodywork by more than 100mm.

6.13. **For Sports Racing Cars** such devices must not extend longitudinally from the rear wheel axis by more than 1100mm.

6.14. **Racing Cars** must comply with **Ch.12 App.14**.

6.15. If originally fitted with **Driver** / **Passenger** doors hatchback doors sliding doors opening boots or tailgates these must be secured in the closed position during **Events.**

6.16. Have effective means of ventilating closed cars.

6.17. Tinted glass in any window which can significantly affect through vision (in or out) or distort the colours of signal flags or lights is prohibited.

6.18. With the exception of **Cross Country Vehicles Racing Trucks** and **Karts** in all **Vehicles** with the **Driver** seated normally the soles of their feet resting on the pedals in the inoperative position shall not be situated to the fore of the vertical plane passing through the centre line of the front wheels.

6.19. **Art.6.18 above** is not applicable to **Vehicles** constructed prior to 1.1.99 or for those **Vehicle** designs which have participated in an **ASN Permitted Championship** prior to 1.1.99.

7. Seating App.7 Applies

7.1. Must have a normal adequate seat for the **Driver** (and any permitted **Passenger).**

7.2. With the occupant seated the seat must be correctly located and securely anchored within the compartment and must not tilt hinge or fold unless it is a production seat fitted with a serviceable locking mechanism preventing independent operation.

7.3. The seat must support and retain the **Driver** within the **Vehicle.**

7.4. The seat cushion (i.e. the part on which the occupant sits) when uncompressed must not be less than 152.5mm below the top edge of the adjacent body side or door.

7.5. Any other seats fitted must similarly comply and all seats must face forward. **Vehicles** of Periods A to D are exempt from this requirement.

7.6. If a single seater the maximum time for a **Driver** to get in or out of the **Vehicle** must not exceed 10 seconds.

8. Engines

8.1. **Paddock Safety**: In areas to which the public has access no engine shall be run with the gears engaged whilst the **Vehicle** has any driving wheels not in direct contact with the ground unless all moving parts are adequately guarded and with the exception of **Karts** a competent person is seated in the driving seat.

8.2. If forced induction is used the coefficient will be 1.7:1. unless stated otherwise in **Specific Technical Regulations** or **Official Documents**.

8.3. Must be equipped with a positive method of throttle closing by means of external spring/springs so that in the Event of failure of any part of the throttle linkage the throttle(s) are sprung closed.

8.4. **Vehicles** fitted with electronic throttle control as standard original manufacturer's equipment for that **Vehicle** are exempt from **Art.8.3 above.**

9. Suspension

9.1. Must be fitted with sprung suspension between the wheels and the **Chassis** and which must be controlled to avoid fouling of wheels on **Chassis** or bodywork.

9.2. **Vehicles** of Periods A and B need not have sprung suspension if originally built without it.

10. Brakes

10.1. Must be fitted with brakes that are operative and capable of stopping the **Vehicle** as required.

10.2. Non-ferrous disc brakes are prohibited unless a **Standard Part** for that **Vehicle** or specifically authorised by the **ASN** for a class or category of **Vehicle**.

11. Steering

11.1. Must have a steering wheel with a continuously closed rim (except for Drag Race Vehicles). 'D' shape wheels are permitted.

11.2. Specifically not permitted are wheels having a noncontinuous rim shape similar to that shown in the **Diagram 2 (a)**. Along with other continuously closed rim shapes, those similar to **Diagram 2 (b)-(c)** are permitted.

11.3. **Vehicles of Periods A and B** may have a tiller or alternative to a steering wheel if it formed part of the original **Vehicle**.

11.4. Steering movement must be controlled to avoid fouling of wheels on **Chassis** or bodywork.

11.5. Rear wheel or four-wheel steering is prohibited unless fitted on a **Production Vehicle** by the manufacturer or permitted under the **Specific Technical Regulations** or **Official Documents.**

12. Wheels

12.1. Must have not less than four road wheels and tyres (excluding the spare).

12.2. Must not be fitted with any wheel spacer exceeding 25mm in thickness or of less than hub diameter. Multiple or **Laminated Spacers** and extended studs are prohibited.

12.3. Must have all hub nave plates and wheel embellishers removed.

13. Tyres Ch.8 may apply

13.1. Must have tyres complying with **Specific Technical Regulations** and/or **Construction and Use Regulations** (if **Standard Road Tyres**) for the duration of the **Event.**

13.2. Tyres if treaded must have not less than 1.6mm of tread remaining at the start of a **Race** except Formula Ford 1600 which must have a minimum of 1mm of tread remaining at the start of a **Race.**

13.3. Where freedom of choice of tyres is left to the **Competitor** the responsibility rests with each **Competitor** to ensure that the tyres to be used are of adequate rating having regard to the potential speed of their **Vehicle** and the nature of the **Event.**

13.4. The fitment and / or use of pressure control valves to **Wheels** and / or tyres is prohibited.

13.5. Unless specifically permitted under the **Regulations** of the **Event** the use of chemical tyre softeners is not permitted.

13.6. The interior of the tyre (space between the rim and the internal part of the tyre) must be filled only with air or nitrogen. This does not preclude the use of inner tubes.

14. Cooling

14.1. Must have any fluid carrying lines or tubes carrying coolants through the **Driver** / **Passenger** compartment painted red except for HV Battery cooling lines. If lines are non-metallic then must be internally or externally metal braided hydraulic pressure hose. Where braided hose is used then all cooling lines must use anodized unions.

14.2. Screwed hose clips (e.g. 'Jubilee Clips') may only be used in conjunction with a suitably swaged pipe.

14.3. **Radiator Caps** should be pressure rated to suit the system and positioned or shielded in such a way that hot water or steam cannot scald the **Driver** of the **Vehicle** if they become opened or broken in an accident.

15. Transmission

15.1. Must have the transmission outside the **Driver** / **Passenger** compartment beneath the floor or secured in casings or coverings of solid material.

15.2. Must be equipped with a reverse gear in normal working order unless otherwise stated in **Specific Technical Regulations**. **Racing Cars** of Periods A to E are exempt from this requirement.

16. Front Engined Cars

16.1. With front engine **Vehicles** a propeller shaft restraint should be fitted. Either safety hooks or a rigidly fixed steel panel of not less than 18swg.

17. Clutch and Bell Housing Protection

17.1. It is recommended that a shield is placed to guard the clutch / bellhousing and to protect in case of clutch / flywheel derangement. This can be a 1⁄8in steel plate or sandbag type absorber as used in drag racing.

18. Oil Systems

18.1. Must have any oil lines passing through the **Driver** / **Passenger** compartment protected and if non- metallic to be of internally or externally metal braided hydraulic pressure hose.

19. Weight / Ballast

19.1. If subject to a minimum weight that must be the weight of the **Vehicle** in the condition in which it crosses the **Finish Line** (excluding **Driver** and **Passenger**) or at any time during the **Competition** and / or **Practice** (except for certain classes or formulae which include the **Driver** in the total weight).

19.2. Any ballast required must be attached to the shell / **Chassis as Homologated by the FIA or,** via at least 4 mounting points a minimum M8 steel fasteners, each with steel counter plates of at least 400 sq mm surface area and 3mm thickness.

19.3. Provision must be made for the fixation of seals by **Scrutineers** if deemed necessary.

19.4. Where ballast is fitted to touring sports, sports racing or GT **Vehicles** it shall be fitted **as Homologated by the FIA or,** in the **Passenger**'s location.

19.5. Single seat racing cars are exempt from the above mounting requirements.

20. Safety

20.1. All **Vehicles** must comply with **Safety Regulations** as itemised under their **Specific Technical Regulations.**

20.2. The **Vehicle** occupant(s) seated in their normal position wearing normal equipment with seat belts fastened and the steering wheel in place must be able to evacuate the cockpit in a maximum of 10 seconds.

21. Miscellaneous

22. Vehicles:

22.1. Must be of sound construction and mechanical condition and be well maintained.

22.2. Must have positive fastenings for all doors and all hinged or detachable parts of the bodywork.

22.3. Must have no temporary parts incorporated in the construction.

22.4. Need not be equipped with seat belts speedometer spare wheel or bumpers if the **Event** is held on private property unless specified to the contrary by **Official Documents**. Any exposed sharp ends of bumpers or other **Bodywork** must be protected.

22.5. Must not be a **Vehicle** of commercial type such as a van / pick-up which was initially intended solely for commercial or goods carrying unless permitted by the **Official Documents.**

22.6. Must have a minimum distance of 1830mm between the centre lines of the foremost front and rearmost rear substantial load-carrying wheels unless complying with an Approved Formula or being a standard production **Vehicle.**

22.7. Except for racing cars must be fitted with a windscreen.

22.8. If plastic windscreen side screens or rear windows are fitted the thickness must not be less than nominal 4mm (minimum 3.8mm). Except for **Vehicle** models originally in production prior to 1st January 1990 for new build **Vehicles** from 2022 they must be Polycarbonate with a nominal thickness of 6mm (minimum 5.8mm) for the windscreen.

22.9. Sports **Vehicles** supplied as standard with plastic side screens may retain them in their original thickness.

22.10. Must not have skirts bridging devices or any form of aerodynamic device between the **Chassis** and the ground / **Track.**

22.11. Any specific part of the **Vehicle** influencing its aerodynamic performance must:

a. comply with rules relating to bodywork and

b. be rigidly secured to the entirely sprung part of the **Vehicle** and

c. remain immobile in relation to the **Vehicle**.

22.12. **Ground Clearance:** No part of the **Bodywork** or of the suspended part of the **Vehicle** can be below a horizontal plane passing 40mm above the ground (unless stated otherwise in **Official Documents**) the **Vehicle** being in normal racing trim with the occupants aboard.

22.13. A gauge conforming to **ASN Technical** requirements may be used by **Scrutineers** at any time during an **Event** to check **Vehicle** ground clearance. This should normally be on a recognised flat area when the **Event** is at a **Race Circuit.**

22.14. Must not carry or pass any liquids or gases other than air at atmospheric pressure in or through any tubes comprising part of the **Chassis** structure.

22.15. It is strongly recommended for all **Competitors** except **Autotest** participating in single **Venue Competitions** to have available at their paddock base and for multi-**Venue Competitions** to carry within their **Vehicle** a self-contained **Spill Kit** capable of effectively absorbing minor spillages of up to 1.25 litres of all **Vehicle** fluids – oils fuels coolants battery acid. For **Autotest** an adequate quantity of **Spill Kits** must be available with the **Organisers** at the **Event** control.

22.16. Used **Spill Kits** are to be disposed of in accordance with local or **National** guidelines and or **Venue Regulations.** They must not be disposed of in general waste facilities at the **Event.**

22.17. **Information devices** (including but not limited to):

a. data loggers

b. displays

c. instrumentation

d. communication systems (where permitted)

e. trip computers

22.18. Mounted within the cockpit must use a mechanical means of attachment sufficiently robust to withstand anticipated stresses and vibration and must not present any sharp edges or projections in the vicinity of the **Driver's** or **Passenger's** body or helmet. Where possible a secondary means of attachment should also be used. Suction mounts are not acceptable as the primary mounting method.

22.19. Except for modifications specifically approved per **Art.3 above**, all vehicle control pedals must automatically return to their unengaged position when driver input directly to the pedal is released.

22.20. **Period Defined Vehicles (Non-Rally)** taking advantage of any exemptions for **Period Defined Vehicles** within the **NCR** must have been issued with either a validated **ASN Period Defined Vehicle Identity Form**, an **FIA Historic Technical Passport**, or an approved **Vehicle Identity Form** issued by an A**SN Registered Club**, which must be presented at **Event Scrutineering**. This will be the definitive document defining the vehicle period.

CHAPTER 7 COMPETITIOR VEHICLES AND VEHICLE SAFETY EQUIPMENT

Appendix 3 - Roll Over Protection Systems (ROPS)

1. Introduction

1.1. This Appendix is for **ASN National** and lower status **Events.**

1.2. Care should be taken to check **FIA International** requirements for **Groups, Classes** and **Formulae** which may not be covered by this section. The **ASN** generally aligns itself with **FIA ROPS Regulations** wherever possible.

1.3. The following are various specifications and configurations that can be used in manufacturing, preparing and installing **Roll-Over Protection Systems (ROPS)** into **Production Cars, Touring Cars Saloon** and **Sports Cars** Art.20, **Sports Racing Cars** (Art.21), **Single Seaters** (Art.22), and other forms of **Competition Vehicles** (Art.23).

1.4. The details covered in this section give many permutations, the **ASN** mandatory requirements are the minimum acceptable.

1.5. The use of a rollbar to achieve or supplement aerodynamic effects is prohibited.

2. Definitions

2.1. **Safety Cage**: A structural framework designed to prevent serious bodyshell deformation in the case of a collision or a car turning over.

2.2. **Rollbar**: Structural frame or hoop and mounting points.

2.3. **Rollcage**: Structural framework made up of a main rollbar and a front rollbar (or two lateral rollbars), their connecting members, one diagonal member, backstays and mounting points (see App.13 Diagram 14 and 15).

2.4. **Main Rollbar**: Structure consisting of a near-vertical frame or hoop located across the vehicle just behind the front seats.

2.5. **Front Rollbar**: Similar to **Main Rollbar** but its shape follows the windscreen pillars and top screen edge.

2.6. **Lateral Rollbar**: Structure consisting of a near-vertical frame or hoop located along the right or left hand side of the vehicle. The rear legs of a lateral rollbar must be just behind the front seats. The front leg must be against the screen pillar and dashboard such that it does not unduly impede entry or exit of **Driver** or **Co-Driver.**

2.7. **Longitudinal Member**: Longitudinal tube which is not a part of the main, front or lateral rollbar, for example, a backstay.

2.8. **Diagonal Member**: Transverse tube between a top corner of the main rollbar or upper end of a backstay and a lower mounting point on the opposite side of the rollbar or backstay.

2.9. **Framework Reinforcement**: Reinforcing member fixed to the rollcage to improve its structural efficiency.

2.10. **Reinforcement Plate**: Metal plate fixed to the bodyshell or chassis structure under a rollbar mounting foot to spread load into the structure.

2.11. **Mounting Foot**: Plate welded to a rollbar tube to permit its bolting or welding to the bodyshell or chassis structure, usually onto a reinforcement plate.

2.12. **Removable Members**: Structural members of a safety cage which are able to be removed.

2.13. **Harness Bar**: A transverse tubular member attached across either the main hoop or backstays to accept harness mountings.

CAGED LASER ENGINEERING

Automotive Engineering and Fabrication Specialists
Bespoke & Standard Roll Cages

ROLL CAGE FABRICATION | CHASSIS FABRICATION | RACE CAR PREP | PIT EQUIPMENT | POWDER COATING | MACHINING | SHEET METAL WORK | CNC FOLDING | LASER CUTTING | DESIGN

Market leaders in roll cage and chassis fabrica on

Producing bespoke and standard roll cages, designed, manufactured and finished to the highest standard all under one roof

All roll cages are Motorsport UK or FIA approved

FIA

motorsport UK

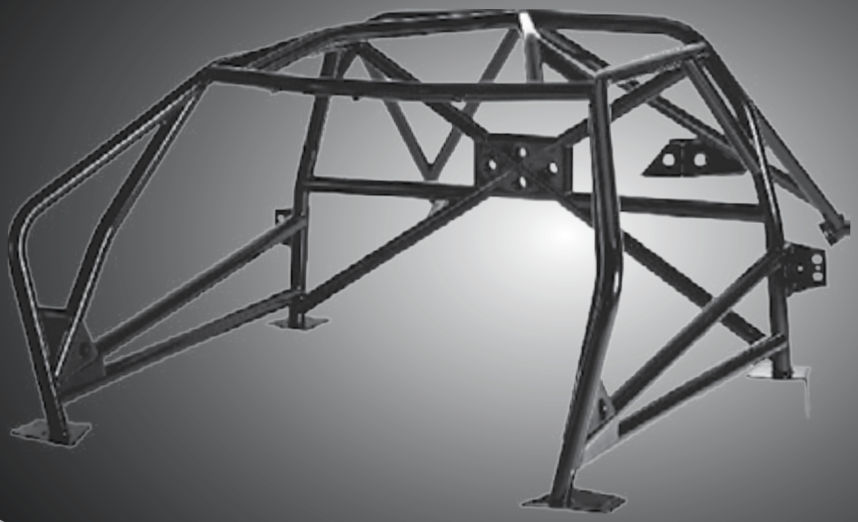

Unit 12
Ash Farm
Business Park
Holcombe
Radstock
BA3 5EX

+44 (0) 1761 239133
info@cagedlaser.co.uk
www.cagedlaser.co.uk

3. Specifications

3.1. **ROPS** must be designed and made so that, when correctly installed, they substantially reduce the risk of injury to the occupants. The essential features of an efficient **ROPS** are that it is designed to suit the particular **Vehicle**, is of sound construction, has adequate mountings and is a close fit to the bodyshell.

3.2. The **ROPS** must not unduly impede **Driver** and **Co-Driver** access to the vehicle. Members may intrude into the interior space by passing through the dashboard, front side trim, rear side trim, and rear seats which may be folded down.

3.3. **ROPS** must not extend beyond the front upper or rear suspension mounting points of the **Vehicle** with the exception of backstays which may extend beyond the rear suspension mounting points if necessary to achieve the required 30° angle.

3.4. Any modification to a **Homologated ROPS** (other than fitment of **Roof Reinforcement, Windscreen Pillar Reinforcement, Doorbars** and **Harness Bars**) is prohibited.

3.5. Tubes must not carry any liquids or gases, other than air at atmospheric pressure, or any other item.

3.6. Inside the cockpit, the passage of the following elements between the side members of the **bodyshell** and the **ROPS** is forbidden:

- Main Auxiliary Battery cables
- Lines carrying fluids (except windscreen washer fluid)
- Lines of the extinguishing system.

4. Compulsory Diagonal Member

4.1. Different ways of fitting the compulsory diagonal member are shown in **App.13 Diagram 14** and **15**. The combination of several members is permitted.

5. Optional Reinforcing Member

5.1. Each type of reinforcement (see **App.13 Diagram 16** and **21)** may be used separately or combined with others.

6. Technical Specifications

6.1. **Main, Front** and **Lateral Rollbars**. These frames or hoops must be made in one piece without joints. Their construction must be smooth and even without ripples or cracks. The vertical part of the main rollbar must be as straight as possible and as close as possible to the interior contour of the bodyshell. The front leg of the front rollbar or a lateral rollbar must be straight or if it is not possible must follow the windscreen pillars and have only one bend unless a windscreen pillar reinforcement is fitted.

6.2. The mounting foot must not be rearward of the foremost point of the rollbar.

6.3. Where the main rollbar forms the rear legs of a lateral rollbar (see **App.13 Diagram 15**), the connection to the lateral rollbar must be at roof level. To achieve an efficient mounting to the bodyshell, the original interior trim may be modified around the safety cage and its mountings by cutting it away or by distortion.

6.4. However this modification does not permit the removal of the complete parts of upholstery or trim. Where necessary the fusebox may be relocated to enable a rollcage to be fitted.

7. Mounting of ROPS to the Bodyshell

7.1. Minimum mountings are:

a. 1 for each leg of the main or lateral rollbar.

b. 1 for each leg of the front rollbar.

c. 1 for each backstay.

7.2. Each leg of a main, lateral or front rollbar must be attached, via a mounting foot, by at least three bolts, minimum M8 ISO grade 8.8 and utilising a steel reinforcement plate of a material of at least the same thickness as the wall of the tube to which it is being welded (minimum 3mm) and of at least 120cm2 area which is welded to the bodyshell (see App.13 Diagram 22 to 27).

7.3. The mounting foot or leg may alternatively be welded directly to the bodyshell / reinforcement plate in accordance with App.13 Diagram 22.

8. Backstays

8.1. These are compulsory and must be attached near the roofline and near the top outer bends of the main rollbar on both sides of the car. They must make an angle of at least 30° with the vertical, must run rearwards and be straight and as close as possible to the interior side panels of the bodyshell. Their materials specification, diameter and thickness must be as defined in Art.18.1. Forward facing stays are permitted if an angle of 30° cannot be achieved with **Backstays** providing they do not unduly impede **Driver** and **Co-Driver** access to the **Vehicle.**

8.2. Their mountings must be reinforced by plates. Each backstay should be secured by bolts having a cumulative section area at least two thirds of that recommended for each rollbar leg mounting in Art.7 above and with identical reinforcement plates of a least 60cm^2 area (see App.13 Diagram 22). A single bolt in double shear is permitted providing it is of adequate section and strength (see App.13 Diagram 29) and provided that a bush is welded into the backstay.

8.3. The mounting foot or backstay may alternatively be welded directly to the bodyshell/reinforcement plate in accordance with App.13 Diagram 22.

9. Diagonal Members

9.1. At least one diagonal member must be fitted. Their location must be in accordance with App.13 Diagram 14 or15 and they must be straight. The combination of several diagonal members is permitted.

9.2. Where two diagonals in the form of a cross are used at least one of the diagonals must be a single piece tube.

9.3. The attachment points of the diagonal members must be so located that they cannot cause injuries. They may be made removable but must be in place during **Events**. The lower end of the diagonal must join the main rollbar or back-stay not further than 100mm from the mounting foot. The upper end must join the main rollbar not further than 100mm from the junction of the backstay joint, or the backstay not more than 100mm from its junction with the main rollbar.

9.4. They must comply with the minimum specification set out in Art.18.1. A diagonal member fixed to the bodyshell must have reinforcement plates as defined in Art.8 above.

10. Optional Reinforcement of ROPS

10.1. The diameter, thickness and material of reinforcements must be as defined in Art.18.1. They must be either welded in position or installed by means of demountable joints. Reinforcement tubes must not be attached to the bodyshell.

11. Transverse Reinforcing Members:

11.1. The fitting of two transverse members as shown in App.13 Diagram 18 is permitted. The transverse member fixed to the front rollbar must not encroach upon the space reserved for the **Driver** or **Co-Driver.** It must be placed as high as possible but its lower edge must not be higher than the top of the dashboard.

12. Doorbars (for side protection):

12.1. Longitudinal members must be fitted at each side of the **Vehicle** (see App.13 Diagram 18 and 21). They may be removable.

12.2. The side protection must be as high as possible but not higher than one half of the total height of the door

aperture measured from its base.

12.3. Where two members in the form of a cross are used, at least one of the members must be a single piece tube.

12.4. Where configuration App.13 Diagram 21 is used a reinforcing gusset must connect the tubes along the horizontal length.

13. Roof Reinforcement:

13.1. Reinforcing the upper part of the rollcage by adding members as shown in App.13 Diagram 19 is permitted.

14. Reinforcement of bends and junctions:

14.1. The reinforcement of the junction between the main rollbar or the front rollbar and the longitudinal members is permitted as shown in App.13 Diagram 21 as is the reinforcement of the top rear bends of the lateral rollbars.

14.2. The ends of these reinforcing tubes must not be more than half-way down or along the members to which they are attached.

15. Windscreen Pillar Reinforcement:

15.1. A tube the upper end of which must be less than 100mm from the junction between the front (lateral) rollbar and the longitudinal (transversal) member and the lower end less than 100mm from the front mounting foot of the front (lateral) rollbar, as shown in App.13 Diagram 68.

15.2. The tube may be bent on condition that it is straight in side view and that the angle of the bend does not exceed 20°.

15.3. **Protective Padding**: Where the **Driver's** or **Co-Driver's** bodies or crash helmets could come into contact with the **ROPS**, non-flammable padding should be provided for protection.

15.4. It is recommended that rollbar / rollcage tubes within 150mm of a vehicle occupant's helmet are covered with a suitable energy absorbing material. Suitable materials are **Homologated** by the **FIA** who publish

specific regulations for the fitment of such materials for **Vehicles** participating in **International Event**.

15.5. **Removable Members**: Should removable members be used in the construction of a **ROPS** the demountable joints used must comply with an approved type (see **App.13 Diagram 30** to **38** and **Diagram 46**). The screws and bolts must be of adequate diameter and of ISO Standard 8.8 or better. **FIA Homologated** demountable joints are also permitted.

16. Protective Padding:

16.1. Where the Driver's or Co-Driver's bodies or crash helmets could come into contact with the ROPS, non-flammable padding should be provided for protection.

16.2. It is recommended that rollbar / rollcage tubes within 150mm of a vehicle occupant's helmet are covered with a suitable energy absorbing material. Suitable materials are **Homologated** by the **FIA** who publish specific regulations for the fitment of such materials for **Vehicles** participating in **International Event**.

17. Removable Members:

17.1. Should removable members be used in the construction of a ROPS the demountable joints used must comply with an approved type (see **App.13 Diagram 30 to 38** and **Diagram 46**). The screws and bolts must be of adequate diameter and of ISO Standard 8.8 or better. FIA Homologated demountable joints are also permitted.

17.2. Demountable joints must not be used as part of a main, front or lateral rollbar because they act as hinges in the principal structure and allow deformation. Their use is solely for attaching members to the rollbars and for attaching a lateral rollbar to a main rollbar (see **App.13 Diagram 11**). In this last case, hinged joints in **App.13 Diagram 30** to **38** and **Diagram 46** must not be used.

18. Guidance on Welding

18.1. All welding should be of the highest possible quality with full penetration and preferably using a gas shielded arc.

18.2. Although good external appearance of a weld does not necessarily guarantee its quality, poor looking welds are never a sign of good workmanship.

18.3. When using heat-treated steel the instructions of the manufacturer must be followed (special electrodes, gas protected welding).

18.4. It is to be emphasised that the use of heat-treated or medium carbon steels may cause problems and that bad fabrication may result in a decrease in strength (caused by brittle heat-affected zones) or inadequate ductility.

19. Harness Bars

19.1. Minimum dimensions 38mm x 2.5mm or 40mm x 2.0mm. Cold Drawn Seamless Carbon Steel with minimum tensile strength of 350N/mm2. Harness straps may be attached by looping around the tube or by threaded fixings using inserts as drawing No. 44 welded into the tubes(s).

20. Material Specifications

20.1. Specifications of the tubes used:

a. **Material**

Cold Drawn Seamless Unalloyed Carbon Steel, containing a maximum of 0.3% of carbon.

Note: For an unalloyed carbon steel the maximum content of additives is 1.7% for manganese and 0.6% for other elements.

b. **Minimum Yield Strength**

350 N/mm2

c. **Minimum Dimensions (Ø in mm)**

i. Mandatory tubular members

45 x 2.5 (1.75” x 0.095”) or 50 x 2.0 (2.0” x 0.083”)

38 x 2.5 (1.5” x 0.095”) or 40 x 2.0 (1.6” x 0.083”).

(For roll cages/bars approved prior to 1.1.95).

ii. Optional tubular members

38 x 2.5 (1.5” x 0.095”) or 40 x 2.0 (1.6” x 0.083”).

20.2. In selecting the steel, attention must be paid to obtaining good elongation properties and adequate weldability.

20.3. The tubing must be bent by a cold working process and the centreline bend radius must be at least three times the tube diameter. If the tubing is ovalised during bending, the ratio of minor to major diameter must be 0.9 or greater.

21. Exceptions

21.1. The only exceptions to the foregoing requirements for **Saloon**, **Single Seater** and **Sports Cars** are as follows:

21.2. **ROPS** manufacturers may make application to the **ASN** for a **Roll Over Protection System (ROPS) Certificate** to be issued.

21.3. Note: **ROPS** manufacturers wishing to make application for such a certificate should contact the **ASN Technical Department** in order to obtain details of the requirements to be met and the fees payable. Subject to these requirements being met a **ROPS Certificate** will be raised and issued. Duly authorised copies of this certificate containing a drawing, photographs, a copy of the manufacturers declaration that the **ROPS** meets the required regulations should be available to **Event Scrutineers.**

21.4. Each **ROPS** manufactured after 1.1.97 for which the **ASN** or the **FIA** has issued a **ROPS (Rollcage) Certificate** must bear an identification plate which details the manufacturer and the manufacturer’s part number allocated to the cage. Details of this identity plate are to be included on the **ROPS (Rollcage) Certificate.**

Vehicle Categories Covered

22. Series Production, Touring and Sports Cars.

22.1. **Production Cars, Touring Cars**, **Sports cars** up to 2,000cc – Basic rollbar / rollcage complying with **App.13 Diagram 10** or **11**

22.2. **Production Cars** and **Touring Cars** over 2,000cc – Rollbar / rollcage complying with **App.13 Diagram 12** or **13**.

22.3. **Sports Cars** over 2,000cc – Rollbar / rollcage complying with **Appendix.13 Diagram 12** or **13** or **64.a & 64.b** and **Diagram 47.**

22.4. The different possibilities of installing the optional reinforcing members to the rollcage are shown in **App.13 Diagram 16** to **21.**

22.5. Each type of reinforcement (**App.13 Diagram 16** to **21**) may be used separately or combined with one or several others).

22.6. These reinforcements can be installed in each of the basic rollcages (**Appendix.13 Diagram 10** to **13**).

Material

22.7. As defined in **Art.20**.

22.8. Note: For all the **ROPS** which are **FIA Homologated** after 1.1.2000 for **Touring Cars** the presence of the **ROPS** in the door aperture must comply with the following criteria (see **App.13 Diagram 63** in this section).

22.9. Dimension A must be a minimum of 300mm.

22.10. Dimension B must be a maximum of 250mm.

22.11. Dimension C must be a maximum of 300mm.

22.12. Dimension D (Measured from the upper corner of the windscreen, without the seal) must be a maximum of 100mm.

22.13. Dimension E must not be more than half height of the door aperture.

22.14. **ASN** Certified and non-**Homologated ROPS** constructed after 1.1.2001 in accordance with **App.13 Diagram 21** must also comply with the above dimensions.

22.15. **Vehicles** of Periods A-Z as defined within the current **FIA** yearbook for which a valid **FIA Historic Technical Passport (HTP)** has been issued – be fitted with a rollbar / rollcage as specified within the **HTP** issued for each individual **Vehicle** and with that **Vehicle** being in compliance with that specification.

23. Sports Racing Cars

23.1. The rollbar must conform to **App.13 Diagram 64.a** and **47.**

23.2. Forward facing stays are permitted for open **Sports Racing Cars.**

23.3. Minimum height 92cm measured along the line of the driver's spine from the bottom of the car seat.

Material

23.4. Cold drawn seamless carbon steel 350N/mm².

Minimum Dimensions (mm)

23.5. 45 x 2.5 (1.75in x 0.095in) or 50 x 2.0mm (2.00in x 0.083in).

24. Single Seat Racing Cars

24.1. The rollbar must be symmetrical about the lengthwise centre- line of the car and of minimum height 900mm measured vertically from the base of the cockpit or 920mm measured along the line of the **Driver's** spine from the bottom of the car seat. There must be at least one brace rearwards from the top of the rollbar at an angle not exceeding 60° with the horizontal, this brace must be the same diameter as the rollbar, if two braces are fitted to the tube the diameter may be reduced to 26mm x 2.5mm (1in x 0.095in). Where two braces are fitted, they may be rearward or forward facing.

24.2. The width inside the roll-over bar main tubes must be 380mm minimum measured 600mm above the base of the seat. It must incorporate a crossbrace to restrain the driver's head and give rearward support. The top hoop radius must not be less than 100mm measured at the centre line of the tube.

Material

24.3. Cold drawn seamless Carbon steel 350N/mm^2

Minimum dimensions (mm)

24.4. **Vehicles** up to 470kg:

38 x 2.5 (1.5in x 0.095in) or 40 x 2.0 (1.6in x 0.083in).

24.5. **Vehicles** 470kg and over

45 x 2.5 (1.75in x 0.095in) or 50 x 2.0 (2.0in x 0.083in).

25. Other Considerations

25.1. An effective rollbar must be fitted with its top edge not less than 50mm above the helmet of the normally seated driver. It must be wider than the driver's shoulders at that height. It must be constructed of good

quality seamless steel tubing of minimum 35mm diameter and wall thickness of 2mm. It should have the top bar straight or slightly curved but no tubes meeting in an inverted 'V'. It must be effectively braced to structural members.

25.2. Non-standard **Vehicles** are advised to fit a rollbar to the following minimum requirements.

a. Minimum height 72cm from the rear of the uncompressed seat cushion.

b. It must have minimum flat width of 38cm running into radiused corners and affording driver and if applicable **Passenger** equal protection.

c. It must be effectively mounted and braced to structural members forward and aft of the cockpit and not less than cockpit width.

d. It must be constructed of good quality seamless steel tubing of minimum 32mm diameter and wall thickness of 1.5mm.

26. ALL aluminium alloy **Roll Cages** are prohibited.

CHAPTER 7 COMPETITOR VEHICLES AND VEHICLE SAFETY

Appendix 4 - Fuel and Fuel Systems

1. General

1.1. **Permitted Fuel** All **Competitors** must use **Permitted Fuel** (see definition Ch.8 and Ch.1 App.1) except subject to prior written authority having been given by the **ASN** where permitted otherwise under **Event Official Documents** and **Championship Regulations.**

1.2. **Fuel Tanks and Pipes** Every effort should be made to isolate fuel tanks and pipes from the **Driver / Passenger** compartment.

1.3. The risk of fuel spillage from accident damage can be reduced by use of **Safety Fuel Cells** or by bag type tanks or by coating metal tanks with GRP.

1.4. **Tanks** should be located so that they are given maximum protection by the structure of the **Vehicle.**

1.5. Where applicable the entire fuel tank area 'Licked' by the open air-stream must incorporate a **crushable structure** as below.

1.6. **Vents** should be designed to avoid spillage if the **Vehicle** becomes inverted.

1.7. **Fuel Fillers** should be designed and located to reduce risk of damage.

1.8. **Filler caps** should not be liable to open in the case of an accident. Simple screw caps are effective. The positive locking of the fuel filler cap(s) is recommended.

1.9. **The filler pipe** to the tank should be of minimum possible length and not protrude beyond the bodywork.

2. Tank Fillers, Vents and Caps

2.1. Tank fillers and caps must not protrude beyond the bodywork or be situated within the **Driver / Passenger** compartment. The caps must have an efficient locking action to reduce the risk of opening during an accident and to ensure closing after refuelling.

2.2. Air vents must be at least 250mm to the rear of the cockpit and must be designed to prevent the escape of fuel should the **Vehicle** be inverted. It is recommended that a non-return valve is incorporated in the vent system.

3. Crushable Structure

3.1. The crushable structure should be a sandwich construction based on a fire-resistant core of minimum crushing strength 25lb/sq in. It is permitted to pass water pipes through this core.

3.2. The minimum thickness of the sandwich construction must be 10mm.

3.3. The fore and aft fuel tank area, however, must provide for a crushable structure of at least 100mm thickness at its thickest point and over a length of at least 350mm after which it may be generally reduced to 10mm. The position of this widest point to be at the constructor's discretion.

3.4. The sandwich construction must include two sheets of 1.5mm thick aluminium sheet having a tensile strength of 14 tons/sq in and minimum elongation of 5%.

4. Safety Fuel Cells

4.1. The **FIA** approved standard for **Safety Fuel Cells** is **FIA Standard FT3-1999, FT3.5-1999** and **FT5-1999**. Fuel cells complying with this standard are only manufactured by authorised companies and bear the **FIA Homologation Label** on each cell.

4.2. No other cells are approved by the **FIA.**

4.3. At **International Status Events.** Under **FIA Regulations** the homologation expires once the cell is five years old. The validity of this homologation may be extended for a further two years if the cell is inspected and recertified by the original manufacturer.

4.4. It is recommended that any safety cell is periodically inspected on a regular basis.

5. Fuel Systems

5.1. Must have any fuel lines passing through the **Driver / Passenger** compartment protected and, if non-metallic, to be internally or externally metal braided hydraulic pressure hose or fuel lines complying with **FIA** specifications.

5.2. Fuel lines may only be joined by screwed sealing joints or vehicle manufacturers approved joint.

5.3. If fitted with fuel fillers in a closed boot, or under closure, have collector / spill trays incorporated to drain outside the **Vehicle.**

6. Fuel sampling

6.1. With the exception of **Vehicles** competing in **Sprint** and **Hill Climb Standard Cars** and **Road Cars Categories**, **Vehicles** competing in **British** and **ASN Titled Championships** for, and all **Vehicles** built after 01 January 2013 for, **Rallycross**, **Car Racing**, **Special Stage Rallying**, **Sprints** and **Hill Climbs** must be equipped with the facility to enable a fuel sample to be taken.

6.2. For fuel injected **Vehicles** the facility must be a dry break fuel sampling coupling, approved by the **FIA**, **Competitors** must carry and make available a 300mm minimum length of hose to which, where necessary, the appropriate mating part is to be attached.

6.3. The fuel system must have sufficient fuel for a fuel test (Ch.8) present at any time during the **Event**. Breach of this **Regulation** will give rise to **Disqualification** (Ch.2) from the **Results** of the **Event** on the principle of a breach of **Technical Regulations.**

7. Methanol and LPG

7.1. If using Methanol a 70mm diameter ‘Day- Glo’ orange disc must be affixed immediately adjacent to the **Competition Numbers** on both sides.

7.2. Any **Vehicle** using methanol must include an **ASN-approved** additive which provides a distinguishable colour and smell when burning. The maximum permitted volume of additive within the fuel is 0.2%.

7.3. If using LPG, the entire system must conform with Construction and Use **Regulations** and LPG Industry Technical Association Codes of Practice in force at the date of the **Event.**

CHAPTER 7 COMPETITOR VEHICLES AND VEHICLE SAFETY EQUIPMENT

Appendix 5 - Electrical Systems

General

Safety for Competitors and Officials is paramount

a. **Wiring** should be of high quality and suitable to its function.

b. **Wiring and systems** must be secured and well protected to reduce the risk of fire from electrical short circuits.

1. Batteries

1.1. Wet **Auxiliary** Batteries should be secured within a nonconductive leak-proof compartment.

1.2. Except for **Racing Cars** be equipped with battery, generator, self-starter, side, tail, and brake lights. All this equipment to be in normal working order. Exceptionally when taking part in an event held totally off the **Public Highway,** need not comply with DfT Statutory Requirements regarding lighting or horn.

1.3. Have Auxiliary Batteries duly protected to exclude leakage of acid and to protect terminals from short circuiting and producing sparks.

1.4. If located in the **Driver / Passenger** compartment, where a **Passenger** / **Co-Driver** is present the Auxiliary battery must be situated to the rearwards of the base of the **Driver's** or **Passenger / Co- Driver's** seat and 'wet' batteries must be enclosed in a securely located leak-proof container.

1.5. Have the **Auxiliary** Battery earth lead, if not readily distinguishable, identified by a yellow marking.

1.6. If non lead acid **Auxiliary** Batteries are used as the main **Vehicle** battery, they battery pack(s) must carry the appropriate "EC" and markings and be either a **Standard Part** or manufactured by an **ASN** registered manufacturer.

1.7. Except for **Electrified Vehicles**, the total quantity of recuperated energy stored in the **Vehicle** must not exceed 200 kJ; this energy may be re-used without exceeding 10 kJ by means of 1kW maximum.

2. Starters

2.1. If required to have a self-starter, be able to demonstrate during the **Competition** that it is capable of starting the engine.

3. Radio suppression

3.1. Engines must be fitted with effective radio interference suppressors.

4. High Voltage (60V+)

4.1. With the exception of ignition systems any **Vehicle** incorporating an electrical system which may run at a voltage exceeding 60V must display the sign detailed in **Drawing 1 of this Appendix** next to all **Competition Numbers.**

Drawing 1

5. External Circuit Breaker

5.1. The circuit breaker, when operated, must isolate all electrical circuits with the exception of those that operate fire extinguishers.

5.2. Any re-set of the circuit breaker must be operated by a distinct different action to the trigger.

5.3. The triggering system for the circuit breaker on saloons should be situated at the lower part of the windscreen mounting, preferably on the **Driver's** side or below the rear window.

5.4. On **Open Cars** the triggering system should be situated on the lower main hoop of the Roll-over Bar on the driver's side or at the lower part of the windscreen mounting (as above).

5.5. Alternatively on **Vehicles** of Periods A to F the mounting point may be mounted approximately vertically below the line of the scuttle on the **Driver's** side.

5.6. The triggering system location must be identified by a Red Spark on a White-edged Blue triangle (12cm base), with the 'On' and 'Off' positions and method of triggering (Push, Pull, or a Rotation direction indicated by an arrow) clearly marked.

6. Red Warning Light

6.1. A rearward facing red warning light of a minimum of 21 watts, with surface area minimum 20cm2, maximum 40cm2, or of 21 watts with a surface area minimum of 50cm2 and with lens and reflector to EU Standards, must be located within 100mm of the centre line of the vehicle and be clearly visible from the rear.

6.2. **Vehicles** fitted with full width bodywork may alternatively use two lights equally located about the **Vehicle** centre line.

6.3. An alternative light unit of equal or enhanced constant luminosity or LED lights that are either homologated by the **FIA** or comply with relevant **EU Regulations** may be used.

6.4. The warning light must be switched on and operational when visibility conditions are reduced, or as detailed within **Championship** and / or **Event Regulations**, or when so instructed by the **Clerk of the Course**.

6.5. **Electrically operated Fire Extinguishers Refer to App. 6.**

CHAPTER 7 COMPETITOR VEHICLES AND VEHICLE SAFETY EQUIPMENT

Appendix 6 - Fire Extinguishers and Systems

General

1. Plumbed-In Fire Extinguisher Systems

1.1. Where a plumbed-in fire extinguisher system is required the **Vehicle** must be equipped with an extinguishing system in compliance with **FIA Standard** for plumbed-in **Fire Extinguisher Systems** in **Competition Cars** (1999) or with **FIA Standard** 8865-2015 or 8876-2022 (for **Single Seaters**).

1.2. The system must be used in accordance with the manufacturer's instructions and with **FIA Technical Lists** n°16 or n°52 or n° 97.

1.3. In **Rallies** the minimum quantity of extinguishant for systems of **FIA Technical** List n°16 must be 3 kg.

1.4. For **Electrified Vehicles** see **App.11 to this Chapter.**

1.5. All extinguisher containers must be adequately protected and must be situated within the cockpit.

1.6. The container may also be situated in the luggage compartment on condition that it is at least 300 mm from the outer edges of the bodywork in all horizontal directions. It is prohibited to mount bottles outside the main structure.

1.7. It must be secured by a minimum of 2 screw-locked metallic straps and the securing system must be able to withstand a deceleration of 25g.

1.8. Anti-torpedo tabs are required.

1.9. The material of the securing system must operate within the –15°C to +80°C temperature range.

1.10. All extinguishing equipment must withstand fire.

1.11. Plastic pipes are prohibited and metal pipes are obligatory (unless specified otherwise). The system must work in all positions.

1.12. The system should have two points of triggering one for the driver (and **Co-driver** in **Rallies**) and one outside the **Vehicle** for activation by **Marshals** etc.

1.13. The **Driver** (and **Co-Driver** where applicable) must be able to trigger the extinguishing system manually when seated normally with his safety harnesses fastened and the steering wheel in place.

1.14. The triggering point from the exterior must be positioned close to the **Circuit Breaker** (or combined with it) and must be marked by the letter “E’’ in red inside a white circle of at least 10cm diameter with a red edge.

1.15. Extinguisher nozzles must be suitable for the extinguishant and be installed in such a way that they are not directly pointed at the occupants' heads.

2. Electrically operated Fire Extinguishers

2.1. **Wiring** should be of high quality and suitable to its function.

2.2. **Wiring and systems** must be secured and well protected to reduce the risk of fire from electrical short circuits.

3. Hand-held extinguishers

3.1. Where a hand-held fire extinguisher is required the **Vehicle** must be equipped with at least one fire extinguisher in compliance with **Arts.3.2–3.9** hereunder or with FIA Standard 8865-2015 (**Arts.3.2–3.6** hereunder do not apply in the latter case).

3.2. Permitted extinguishants:

3.2.1. AFFF Clean Agent powder or any other extinguishant homologated by the FIA.

EXTINGUISHER EXPERTS

FOR RACING & MOTORSPORT

FEV Fire Suppression is a UK based manufacture of high quality fire suppression systems and products for the motorsport industry. Established in 1990, and with over 30 years of expertise in developing our market leading products, we are proud to supply all levels of motorsport internationally.

We are committed to innovation and reliability and ensuring that our products provide unparalleled safety in every situation.

- All systems FIA homologated meeting Motorsport UK regulations
- UK approved service agents
- Fast turnaround times for supply of high quality fire suppression products
- A product range to meet weight and space saving requirement's
- We are the leading supplier of systems to manufacturers and teams at top level motorsport, a brand recognised for quality and reputation

THE NEXT GENERATION

Our latest range in breakthrough fire suppression is the CF-TEC range. 2023 saw the launch of a new era of fire safety innovation. Offering the only mechanical activation and the most cost effective solution for FIA Standard 8865 Technical List 52.

- Mechanical and electrical activation options for FIA Standard 8865
- Fast fire out times with weight and packaging advantages
- Cutting edge Coldfire agent removes extreme heat, prioritising safety and the environment

FIA

motorsport UK

01243 555566 | WWW.F-E-V.CO.UK
SALES@F-E-V.CO.UK

Fire Extinguisher Valve Company Ltd
Unit B3 Ford Airfield Industrial Estate, Ford, West Sussex. BN18 0HY

FEV
FIRE SUPPRESSION

3.3. Minimum quantity of extinguishant:

3.3.1. **AFFF foam** (includes: FireSense Zero 2000 F-TEC etc)

2.4 litres

3.3.2. **Gas** (includes: Novec 1230 FX G-TEC/N-TEC Viro3 Zero 360 Extreme etc)

2.0 kg

3.3.3. **Powder**

2.0 kg

3.4. **All extinguishers must be pressurised** according with the manufacturer's instructions. Powder extinguishers must be pressurised to 8 bars minimum 13.5 bars maximum.

3.5. All extinguishers must be equipped with a means of checking the pressure of the contents.

3.6. The following information must be visible on each extinguisher:

- Capacity
- Type of extinguishant
- Weight or volume of the extinguishant
- Date the extinguisher must be checked which must be no more than two years after either the date of filling or the date of the last check or corresponding expiry date.

PD EXTINGUISHERS

MOTORSPORT
FIRE EXTINGUISHERS

4kg Haylo
Mechanical/Electrical
Plumbed in saloon car system FIA Approved to Technical list 16 EX057.19

FIA APPROVED

4.25L ATF
Mechanical/Electrical
Plumbed in saloon car system FIA Approved to Technical list 16 EX056.19

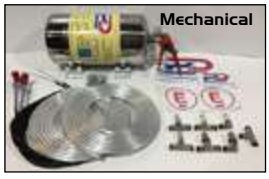

FIA APPROVED

2 & 3 Kg Haylo Hand Held
Haylo is a Halon replacement extinguishing medium

2.4 Litre ATF Hand Held
Motorsport UK compliant our ATF uses Aerospace grade aqueous foam

t: +44(0)1254 954954
e: orders@pdextinguishers.co.uk

Revidge Fold, Revidge Rd
Blackburn, Lancs, BB1 8DJ

Find us on facebook

www.pdextinguishers.co.uk

3.7. All extinguishers must be adequately protected.

3.8. Their mountings must be able to withstand a deceleration of 25g. Furthermore only quick-release metal fastenings (two minimum) with metal straps are accepted. Anti- torpedo tabs are required. It is prohibited to mount bottles outside the main structure.

3.9. The extinguishers must be easily accessible for the **Driver** and the **Co-Driver**.

4. During events:

4.1. All plumbed-in extinguisher systems must be in an 'ARMED' condition (i.e. be capable of being operated without the removal of any safety device) at all times whilst competing or **Practicing** in races or **Speed Events** (including during post-**Event Scrutineering**) and at all times that crash helmets are worn on **Rallies** (i.e. on **Stages** etc.).

4.2. Any plumbed-in extinguisher system found to be incapable of being operated will be the subject of a report to the **Clerk of the Course / Stewards** for possible penalty as an offence against **Safety Regulations.**

4.3. Checking for correctly 'Armed' extinguisher systems should only be carried out by **ASN Scrutineers** and / or **Judges of Fact** nominated for that purpose.

CHAPTER 7 COMPETITOR VEHICLES AND VEHICLE SAFETY EQUIPMENT

Appendix 7 - Seats Harnesses and Headrests

General

1. Seating

1.1. Have a normal adequate seat for the **Driver** (and **Co-Driver** where applicable).

1.2. With the occupant seated, the seat must be correctly located and securely anchored within the compartment and must not tilt, hinge or fold unless it is a production seat fitted with a serviceable locking mechanism preventing independent operation.

1.3. It must support and retain the **Driver** within the **Vehicle.**

1.4. The seat cushion (i.e. the part on which the occupant sits) when uncompressed, must not be less than 152.5mm below the top edge of the adjacent body side or door.

1.5. Any other seats fitted must similarly comply and all seats must face forward.

1.6. **Vehicles** of Periods A to D are exempt from this requirement.

1.7. If a single seater the maximum time for a **Driver** to get in or out of the **Vehicle** must not exceed 10 seconds.

2. Seats

2.1. All seats should be correctly located and securely anchored in such a way as to allow no movement in squab or backrest. When installing a **Competition** Seat, carry out the following checks before selection or purchase:

a. Study the requirements of the **Vehicle** concerned and ask the manufacturer's advice and recommendations.

b. Check that the seat is suitable for the type of forces to which it could be subjected. These will include fore and aft and lateral loadings.

c. Check that the seat carries full instructions for installation in your **Vehicle**.

d. Check that suitable mounting installations are available from the manufacturer.

e. Ask the manufacturer to confirm that the seat frame is suitable for your Motor Sport discipline.

f. If the original seat attachments or supports are changed, the new parts must either be approved for that application by the seat manufacturer or must comply with the following specifications (see **App.13 Diagram 48**).

2.2. Supports must be attached to the shell / **Chassis** via at least 4 mounting points per seat using bolts with a minimum diameter of 8mm and counterplates, according to **App.13 Diagram 48**.

2.3. The minimum area of contact between support, shell / **Chassis** and counterplate is 40 sq cm for each mounting point.

2.4. In **Series Production Cars** manufacturers' standard seat mounting points may be used.

2.5. If quick release systems are used they must be capable of withstanding vertical and horizontal forces of 18000N, applied non-simultaneously.

2.6. If rails for adjusting the seat are used, they must be those originally supplied with the homologated **Vehicle** or with the seat.

2.7. **For new build Vehicles from 1st January 2021**, where transverse seat mounting rails are used, they must be compliant with **App.13 Diagram 66.a** or homologated by the **FIA** or an **FIA** recognised **ASN.**

2.8. The end plates may alternatively be welded to the counterplate.

SCHROTH RACING
CHAMPIONS CHOICE

SCHROTH® RACING

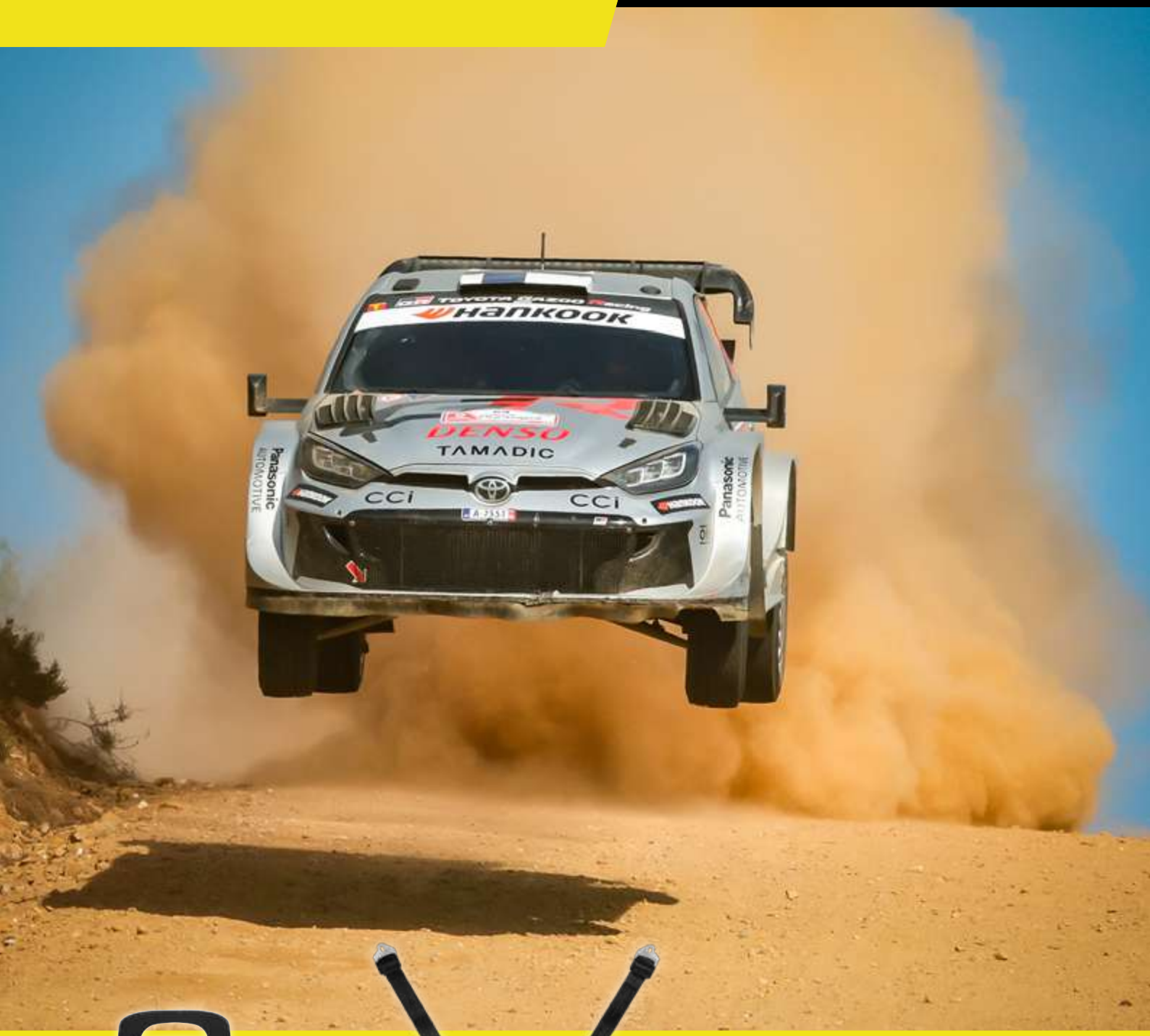

XLT CARBON

ENDURO 2x2

Wide Range of FHR Devices, Harness Belts & Racing Nets

Visit www.schroth.com/racing
to learn more about our products.

Follow us on Facebook
www.facebook.com/schrothracing

Follow us on Instagram
www.instagram.com/schrothracing

2.9. Multiple mounting holes, to a maximum of 4 at each mounting point, are permitted as shown in App.13 Diagram 66b. - c.

2.10. App.13 Diagram 66.a. - c Material specification:

2.11. **Tube**

2.12. Cold Drawn Seamless Unalloyed Carbon Steel Minimum Yield strength 350N/mm2

2.13. Minimum dimensions 35mm diameter x 2.5mm wall thickness

2.14. **Box Section (Structural)**

2.15. Unalloyed Carbon Steel

2.16. Minimum Yield Strength 350N/mm2

2.17. Minimum dimensions 35mm square x 2.5mm wall thickness

2.18. Any mounting holes drilled in the seat rails must have bushes installed, these must be fully welded. The bushes must be profiled to prevent them being pulled through, alternatively they may be of 'top hat' type inserted from below. Minimum bush diameter 13mm for M8 bolts, 15mm for M10 bolts. Multiple bush position are permitted.

2.19. The minimum overall length of the "U" shape extruded section is 50mm with a 2.5mm wall thickness.

2.20. Each mounting point must be capable of withstanding a force of 15000N applied in any direction.

2.21. The seat must be attached to the supports via 4 mounting points, 2 at the front and 2 at the rear of the seat, using bolts with a minimum diameter of 8mm and reinforcements integrated into the seat.

2.22. The minimum thickness of the supports and counterplates is 3mm for steel and 5mm for light alloy materials. The minimum longitudinal dimension of each support is 6cm.

3. Headrests

3.1. On all **Vehicles** where it is not mandatory it is strongly recommended that a head restraint in the form of a headrest be fitted as **Head Restraints** below.

4. Head Restraints

4.1. **Head Restraints** when required to be fitted, must be capable of restraining a 17kg mass decelerating at 5g.

4.2. Dimensions to be 100mms x 100mms and located such that the **Driver's** / **Passenger's,** head / helmet is restrained and cannot move past it under rearward forces or be trapped between the rollbar and the head restraint. It is recommended that it be within 50mm of the **Driver's** / **Passenger's** helmet when they are normally seated.

5. Harnesses (Seat Belts)

5.1. All seat safety belts must be complete units sourced from a recognised manufacturer and fitted in accordance with the manufacturers' instructions, **ASN** recommendations or **FIA** requirements. (Diagrams 49, 50, 51, 52 and 65).

5.2. Where the **Vehicle** manufacturer's standard safety belts and associated fitments are not utilised, bolts must be steel and of a minimum 7⁄16in UNF or M12 (grade 8.8) or, for an FIA homologated harness, as specified by the harness manufacturer.

6. Three point

6.1. Either one diagonal shoulder strap and one lap strap, or two merged shoulder straps and one lap strap bearing an ECE 'E' mark. With three anchorage points on the **Chassis**/body shell or roll over bar of the **Vehicle** on either side and to the rear of the **Driver's** seat.

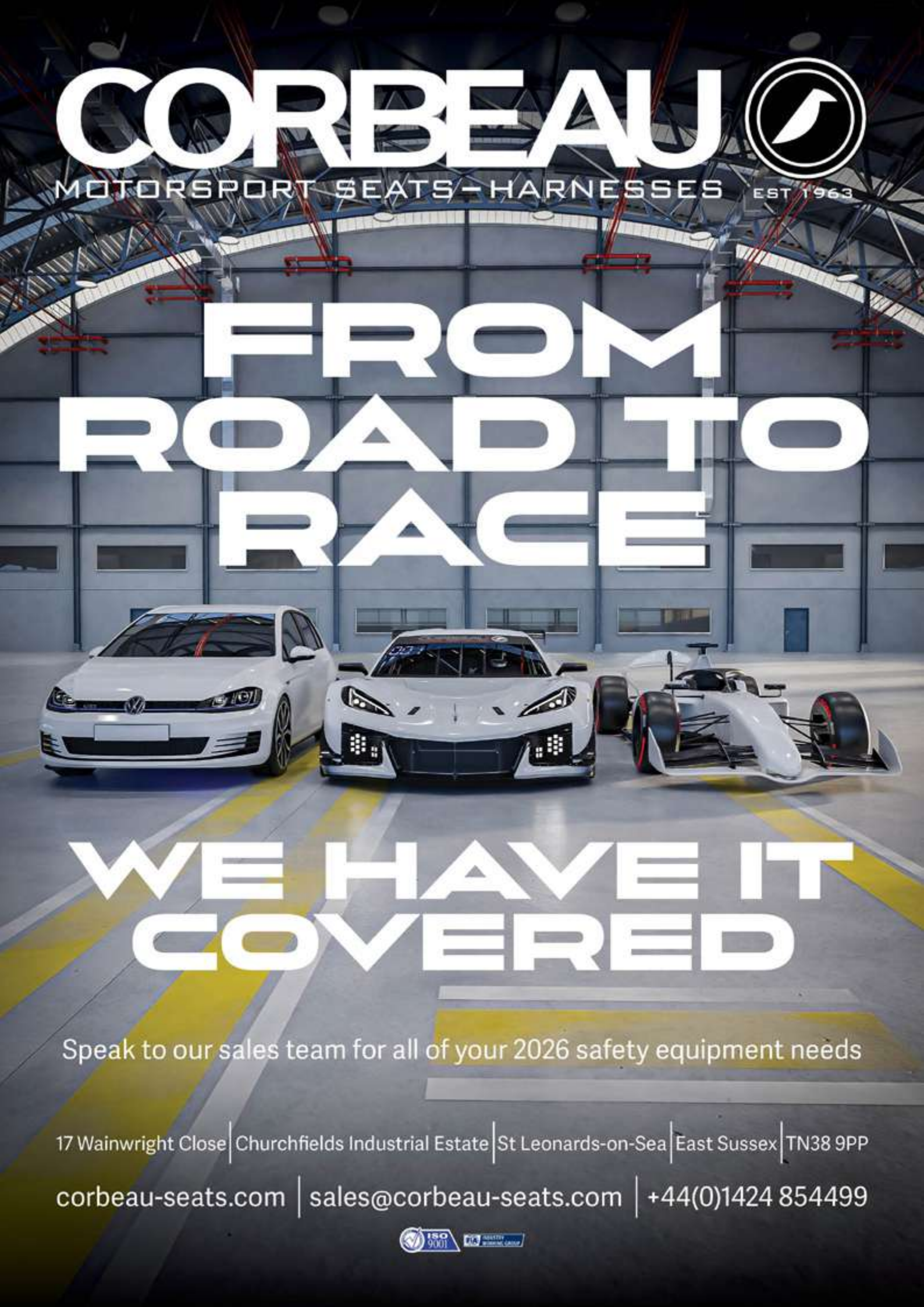
CORBEAU
MOTORSPORT SEATS–HARNESSES
EST 1963
FROM ROAD TO RACE
WE HAVE IT COVERED
Speak to our sales team for all of your 2026 safety equipment needs
17 Wainwright Close | Churchfields Industrial Estate | St Leonards-on-Sea | East Sussex | TN38 9PP
corbeau-seats.com | sales@corbeau-seats.com | +44(0)1424 854499
ISO 9001

7. Four point

7.1. Two shoulder straps and one lap strap, with four anchorage points on the **Chassis** / body shell or roll over bar of the **Vehicle**, one either side of the **Driver** and two to the rear of the **Driver's** seat.

8. Five point

8.1. Two shoulder straps, one lap strap and one strap between the legs with five anchorage points on the **Chassis**/body shell or roll over bar of the **Vehicle**, one either side of the **Driver**, two to the rear of the **Driver**'s seat and one between the legs.

9. Six Point

9.1. Two shoulder straps, one lap strap and two straps between the legs, with six anchorage points on the **Chassis**/body shell or roll over bar of the **Vehicle**, one either side of the **Driver**, two to the rear of the **Driver's** seat and two between the legs.

10. Where safety harnesses are mandatory it is recommended that 4 or 5 or 6 point harnesses are used and are Homologated by the FIA and carry their label.

10.1. It is permitted to make a hole in series production seats to allow secure anchoring of seat belts.

10.2. **International Events**

10.3. All harnesses must be homologated by the **FIA** and carry their label.

10.4. **For National Events** where **Specific Regulations** require an **FIA Homologated** harness, harnesses **Homologated** by the **FIA** according to **FIA** standard 8853-2016 may be used for up to five years after the year stated on the label.

10.5. Harnesses **Homologated** by the **FIA** according to **FIA** standards 8853/98 and 8854/98 may be used until 31st December of the year stated on the label.

10.6. Harnesses **Homologated** by the **FIA** will display the **FIA Homologation** Label on the left shoulder strap.

10.7. It is not permitted to mix parts of seat belts. Only complete sets as supplied by manufacturers are to be used.

10.8. Only one release mechanism is permitted on each seat belt configuration and this must be available for the wearer to operate whilst seated in the competing position.

10.9. The anchorage points to the rear should be positioned so that the strap from the shoulder is as near horizontal as possible. It should not be located on the floor directly behind the **Driver** / **Co-Driver**.

10.10. Seat belts once involved in a serious accident must be discarded as they are likely to have stretched.

10.11. Belts subjected to oil, acid or heat should be replaced.

10.12. Elastic devices attached to the shoulder strap are forbidden.

CHAPTER 7 COMPETITOR VEHICLES AND VEHICLE SAFETY REQUIREMENTS

Appendix 8 - Exhausts Silencing and Noise Testing

1. Exhausts

1.1. The exhaust system must be isolated from the **Driver / Passenger** compartment (e.g beneath the floor or secured in casings of solid material).

1.2. No part of the exhaust system on a **Racing Car** with rear aerodynamic device may extend rearwards beyond the aerofoil.

1.3. If a **Racing Car** without aerodynamic device must not have exhaust pipes extending more than 600mm beyond the rear wheel axis.

1.4. If **Rear Engined Single Seater Racing Car** must have the exhaust outlet between 40mm and 600mm from the ground.

1.5. Have all exhaust outlets terminating behind the mid-point of the wheelbase of the vehicle and within 150mm of the outside of the bodywork periphery in plan view.

1.6. Side exhausts must not protrude more than 40mm.

1.7. For **Vehicles** other than **Racing Cars** that are not fitted with enveloping bodywork any side exhaust must not extend beyond the plane through the outside of the front and rear tyres with the front wheels in the straight-ahead position. Cars of Periods A to E and **Drag Race Vehicles** are exempt from these requirements.

1.8. Exhaust catalytic converters must be fitted to all petrol engined production-based saloon touring and **Sports Cars** including specialist production and kit cars manufactured after 31/12/99. They may be specified for certain other **Formulae. Competitors** are reminded of their obligation to maintain such equipment on a **Vehicle** used on the highway where government legislation requires it.

1.9. Exhausts must not protrude to the rear of the bodywork more than 15cm.

2. Silencing

2.1. The reason for **Silencing** (**NOISE** CONTROL) is to reduce environmental impact and to keep Motor Sport running. Environmental Protection legislation has increased the pressure on activities generating **Noise** and Local Authorities have the power to suppress any **Noise** source deemed to be causing a nuisance. Our system of control is acceptable to most Environmental Bodies and must be considered as part of eligibility to **Compete** in **Events.**

2.2. All competing **Vehicles** are subject to mandatory silencing unless a specific waiver for that **Class** or **Formula** is granted. Where specified as mandatory a silencer must be used irrespective of the exhaust **Noise** generated without it.

2.3. **Vehicles** which comply with the **Technical Regulations** of **FIA Formulae** and **Championships** set out in the current **FIA Yearbook** and other **FIA** approved **Championships, Series** and **Cups** which are participating in races for such **Formulae Championships, Series** and **Cups** at **Events** which have been entered on the **FIA International Calendar** are exempt from **ASN Noise** test requirements but must comply with the **Noise** test requirements set out in the appropriate **Formulae Championship**, **Series** or **Cup Regulations.**

2.4. Silencing is not mandatory in competitions catering exclusively for the following categories of **Vehicle** but is strongly recommended and may be made mandatory in the **Official Documents** at the request of the **Circuit / Venue** owners:

a. All **Vehicles** of Periods A to D. (This does not include **Events** any part of which takes place on the **Public Highway** where national laws will apply.)

b. Formula 1 and other **Single Seater Racing Cars** of Periods E and F.

c. **Drag Race Vehicles.**

2.5. For **GB3, British GT** and **British Touring Car Championships** the **Noise** test shall be conducted as set out within these regulations with the engine running at 3/4 maximum speed the **Noise** level meter at a height of 0.5 metres above the ground (± 0.1 metre) located at 45° to and 0.5 metres distant from the exhaust with a maximum permitted **Noise** level of 118dB(a).

2.6. Temporary **Silencers** by-pass pipes or the inclusion of temporary parts to achieve silencing requirements are prohibited. **Officials** may refuse to carry out **Noise** Checks on vehicles utilising temporary parts in exhaust systems. **Organiser**s are empowered to disqualify in such situations.

2.7. **Circuit / Venue** owners / **Organisers** may impose additional restrictions including in the **Official Documents**.

3. Noise Test Requirements (App.13 Chart 1)

Noise testing should be carried out BEFORE taking part in any **Competition.**

3.1. Specific **Regulations** apply to **Rally (**Ch.13) and **Kart Racing** (Ch.18).

3.2. The time and location of **Noise** testing should be advised to **Competitors** prior to the **Event.**

3.3. Measurements will be made at 0.5m from the end of the exhaust pipe with the microphone at an angle of 45° with the exhaust outlet and at a height of 0.5 to 1.0m above the ground.

3.4. Where more than one exhaust outlet is present the test will be repeated for each exhaust and the highest reading will be used. In circumstances where the exhaust outlet is not immediately accessible the test may be conducted at 2.0m from the centre line of the vehicle at 90° to the centre line of the vehicle with the microphone 1.2m above the ground.

3.5. Measurements should be made outdoors with no large reflecting objects (e.g walls etc.) within 3.0m (in the 0.5m test) or within 10.0m (in the 2.0m test).

3.6. Background **Noise** levels should be at least 10dB(A) below the measured level.

3.7. Where possible measurements should be taken as close as possible to the vehicle at the defined distances to avoid background **Noise**.

3.8. Cars of Periods A to D falling within Sections C and D should run engines at two thirds maximum RPM.

3.9. The 2.0m test can be made from either side of the **Vehicle.**

3.10. The highest reading registered being the one needing to comply with the maximum **Noise** requirements.

3.11. It is stressed that all participants in Motor Sport **Competitors Officials Marshals** etc. should be aware of and protect themselves from **Noise**.

CHAPTER 7 COMPETITOR VEHICLES AND VEHICLE SAFETY EQUIPMENT

Appendix 9 - Onboard Cameras

1.1. The carrying of on-board cameras / videos for personal use is permitted unless prohibited by **Event** regulations. The carrying of on-board cameras / videos for commercial use is prohibited unless authorised by the **Event Organiser.**

1.2. Where **Event** or **Championship Regulations** require the fitting of a camera, the location and method of fitting should be specified.

1.3. Where forward facing cameras are fitted for judicial purposes they should be mounted to capture an image that provides a 'driver's eye' view that should include, where possible, the steering wheel, 'dashboard' and a view of the Course ahead with a field of vision of approximately 100 degrees. In open wheel cars and **Karts** both front wheels should be in view where possible. The fitting of rear-facing cameras may also be required for judicial purposes.

1.4. Where cameras are permitted but not mandated by the **Organiser,** they may be mounted in any location on the **Vehicle** which is considered safe by the **Chief Scrutineer.**

1.5. The mounting of any camera must be specifically approved by the **Chief Scrutineer**. Any mountings must use a mechanical means of attachment sufficiently robust to withstand anticipated stresses and vibration and must not present any sharp edges or projections in the vicinity of the driver's body or helmet. Where possible, a secondary means of attachment should also be used. Suction mounts are not acceptable as the primary mounting method. Where cameras are fitted by professional TV or film companies, the **Chief Scrutineer** has discretion to approve non-mechanical mountings.

1.6. For **Karting** the above provisions apply but the weight of the camera including any additional casing (excluding any additional mounting and associated fixing) must not exceed 200g.

1.7. **Competitors** may be obliged to use mountings and / or cameras specified and / or approved by the **Organiser** and these too must comply with the above **Regulations.**

1.8. Fitting of cameras to or within helmets is only permitted in accordance with **Ch.9** whereby only the helmet manufacturer's integral camera can be used and the helmet with camera installed is approved under an accepted standard. Only glasses for the sole purpose of correcting eyesight in accordance with **Chapter 6 Appendix 2 Article 6.7** (and/or sun protection) are permitted.

1.9. Fitting of on-board cameras in **Road Rallies** is forbidden.

1.10. Unless specified by the **Organisers** the choice of system is free but playback must be possible at the **Event** by regular means such as a laptop computer.

1.11. **Clerks of the Course** and **Stewards** should not refuse to view relevant on-board footage during any judicial process unless they consider there is a good reason why it should not be viewed (in which case such reason must be stated as part of their written decision).

1.12. Where the camera has not remained under the control of the **Organisers** the **Judicial** body must be satisfied as to the authenticity of such footage and must consider the weight they will give to such evidence.

1.13. Where a camera is mandated, if no images are available upon request (other than due to a proven defect with the equipment) sanctions may be applied in accordance with **Ch.2.** The burden of proof to establish the cause of such failure shall lie with the **Competitor.**

1.14. The **Clerk of the Course** may also refer the matter of lack of recorded images to the **Stewards of the Event** for further sanctions or referral to the **ASN.**

1.15. In the **Event** of judicial action being instigated all relevant on-board footage must be retained until the time period for conclusion of all judicial matters has elapsed.

1.16. All on-board footage recovered from a **Vehicle** involved in a **Serious Incident** must be retained by the **ASN Steward** where appointed (otherwise by the **Senior Event Official**) and forwarded to the **ASN** with the Incident **Report**.

1.17. Where it is necessary for a **Clerk of the Course** to review footage after an **Event** such footage should normally be reviewed within a period of 7 days of the **Event** always subject to the **Right of Review.**

1.18. **Competitors** should be aware of any rights including copyright in relation to footage captured by on board cameras at an **Event**. Footage may not be shared or otherwise used for broadcast or commercial purposes or on social networking sites, forums or any other internet media without the permission of any rights holders.

1.19. Any breach of camera regulations may be subject to the penalties provided for in **Ch.2** with an option to report any matters to the **Championship Stewards** where appropriate.

CHAPTER 7 COMPETITOR VEHICLES AND VEHICLE SAFETY EQUIPMENT

Appendix 10 - Competition Numbers

Competition Numbers must be:

1.1. **Competition Numbers** must be visible, and:

a. displayed on each side of the **Vehicle** (front doors, alongside the cockpit or on rear wing end plates) and on the foremost part of the nose.

b. amended and / or repositioned if required by the **Officials** of the **Event**

c. Numbers must be displayed in a durable manner and be black, of a minimum size of 23cm high with stroke width of a minimum of 3.8cm on a white oblong background measuring not less than 48cm x 33cm which must extend at least 5cm beyond the outline of the numbers. Alternatively, the numbers may be displayed on a white circular background provided that the background extends at least 5cm beyond the outline of the numbers.

d. If on a white vehicle a background of the dimensions in 1.1 must be delineated by a continuous black line, except for cars of period A to E.

1.2. Discipline specific requirements are contained in the individual discipline Chapters to the **NCR**.

1.3. Certain types of **Competition** have special requirements which will appear in the **Official Documents** (Subject to approval by the **ASN**) (see Ch.18 App.8 Art.30 for **Kart** Numbers and Ch.12 App.4 Art.5 for **Circuit Racing**).

1.4. Note. Consideration should be given at all times to the positive identification of vehicles by the **Competition Organisers** whose decisions will be final.

1.5. The numbers must be of the ‘Classic’ type as shown below:

1 – 2 – 3 – 4 – 5 – 6 – 7 – 8 – 9 – 0.

1.6. In **International Events** on both front wings an illustration of the national flag(s) of the **Driver(s)** as well as the name(s) of the latter shall be displayed. Minimum height of both flag(s) and name(s) shalll be 4cm.

1.7. If a **Vehicle** is being driven to and from the **Event** on the **Public Highway** then any **Competition Number** identifying the **Vehicle** during a **Competition** MUST be removed at the finish of the **Event.**

1.8. **Organisers** may use three figured numbers subject only to the specific approval of the **Chief Timekeeper.**

CHAPTER 7 COMPETITOR VEHICLES AND VEHICLE SAFETY EQUIPMENT

Appendix 11 - Electrified Vehicles

1. Technical

1.1. The term **Electrified Vehicle ('EV')** is used in these regulations to cover all forms of Electrified **Vehicles** (including those defined in FIA Appendix J – Article 251) : mild **Hybrid Electric Vehicle ('mHEV'), Hybrid Electric Vehicle ('HEV')** / **Full Hybrid Electric Vehicle (FHEV), Plug-in Hybrid Electric Vehicle (PHEV)** and **Electric Road Vehicle ('ERV')** / **Battery Electric Vehicle ('BEV').**

1.2. High Voltage (HV) shall be as defined in **FIA** Appendix J Art 251 3.1.10 (from ISO 6469-1:2009): > 30V AC and ≤ 1000V AC or > 60V DC and ≤ 1500V DC.

1.3. An **EV** may contain a High Voltage (HV) or Low Voltage (LV) propulsion system.

1.4. As a general principle in all **Technical Regulations** it is prohibited to carry out any tuning or modification that is not specifically permitted. The fact that some modifications are mentioned as prohibited does not imply that others are allowed.

1.5. Changes to these **Technical Regulations** made on grounds of safety may be enforced immediately without notice.

1.6. These General **Technical Regulations** are for individual **Vehicle** builds. **Championships** for specific **Vehicles** not in accordance with these regulations may apply for approval which will be considered at the discretion of the **ASN.**

1.7. **Permitted Electrified Vehicle Types** (App.13 Chart 3)

1.8. These regulations apply to any modified **National** Type Approved or **Bespoke** / prototype **EVs** intended for **Competition** use. Standard and unmodified production **EVs** are subject to the existing requirements of the **ASN** and the **FIA** where applicable.

1.9. A **Standard Vehicle** is defined as built by the manufacturer in accordance with its homologation / type approval with no modifications or alteration of the **Vehicle** structure, powertrain, or electrified propulsion system. E.g., **Competition** seats using the original mounting points and fasteners are permitted. A **ROPS** requiring fastening to the **Vehicle** structure is prohibited.

1.10. A **Modified Vehicle** is a **Standard Vehicle** with non-powertrain modifications only (including fitment of safety equipment including **ROPS** which alters the **Vehicle** structure). No modifications to the internal combustion engine (ICE) and / or electrified propulsion system are permitted other than non-Powertrain HV systems (such as HVAC etc.) which may be removed. The exposed HV connectors must be capped with suitable blanking plugs that maintain HVIL functionality. **Driver** displays, and powertrain cooling systems may be replaced with alternative commercially available parts.

1.11. A **Bespoke Vehicle** is one designed and constructed from scratch including prototypes. Only **Bespoke BEVs** are permitted. **Bespoke** includes prototype or otherwise unique competition **Vehicles**.

1.12. A production **Vehicle** with the ICE powertrain replaced by an electric one is classified as **Bespoke.**

1.13. Hydrogen powered fuel-cell hybrid and electric **Vehicles** are prohibited.

1.14. These **Technical Regulations** cover all **EVs,** but not all regulations apply to all **Vehicles.** For example, the HV safety related requirements do not apply to an **mHEV**, as these operate at a nominal DC voltage of 48V which is lower than the 60V DC limit (Table 1).

1.15. The discipline-specific Sporting **Regulations** will determine which category of **EVs** are allowed to compete in which discipline.

1.16. Except for **Standard EVs** in non-**Speed Events** all **EVs** must be in possession of a valid **Vehicle Passport** to compete. **Modified** and **Bespoke EVs** must undergo and pass a **Vehicle Passport** inspection irrespective of discipline or **Category.**

1.17. **Electric Vehicle Passports** will be issued by the **ASN**.

1.18. See Art.2 **EV Passport and Inspection Process** for more details.

1.19. Additional requirements or restrictions from discipline and/or category specific regulations shall apply

2. EV Passport and Inspection Process.

2.1. Anyone considering building a **Bespoke EV** for **Competition** use must supply a project outline, including details / qualification of those engineering the **Vehicle** for review by **ASN Technical Department** prior to starting construction. On-going dialogue between the entrant and the **ASN** throughout the build process is encouraged to minimize the risk of non-compliance with these regulations when **Vehicle** is inspected

2.2. **Standard EVs** may be issued with a **Vehicle Passport** without inspection upon application to the **ASN.**

2.3. **Modified** and **Bespoke EVs** must undergo and pass a **Vehicle Passport** inspection and be in possession of a valid **Passport** to compete irrespective of discipline or **Category**.

2.4. For a modified production **Vehicle**, the inspection will include a comprehensive visual inspection to ensure that installation of the **ROPS** and non-powertrain modifications have not compromised the HV system.

2.5. No repositioning of HV components (incl cables) is permitted.

2.6. For a **Bespoke Vehicle** a detailed technical inspection of the entire **Vehicle** including the **EV** system, and its safety systems will be required. An **EV**P will be issued once the **Vehicle** has passed the inspection.

2.7. See Chart 3 for **EVP** requirements.

2.8. Where a **Bespoke** or **Modified OEM EV** is intended for a single make / one make series and all **Vehicles** are built / modified by the same organisation then only the first **Vehicle** in a batch will require full inspection. All subsequent **Vehicles** from the batch will be issued with an **EVP** following written confirmation by the build organisation that the follow-on **Vehicles** are identical to the first **Vehicle.**

2.9. **Electric Vehicle Inspections** must be arranged by appointment with the **ASN** and will be carried out by an **ASN Technical Official.**

2.10. The **Entrant** must provide all data / evidence to the **ASN** 3 months prior to the **Vehicle** inspection as summarised below:

a. RESS impact protection details (Art.8.1) if mounted underfloor.

b. RESS Structural calculations or crash test/simulation results (Art.8.3).

c. UN 38.3 and MSDS for cells (Art.9.3).

d. Cell chemistry details.

e. BMS including cell temperature monitoring details (Art.10.4).

f. Isolation Surveillance System details (Art.12.20).

g. **Vehicle** specific Emergency Services Guide (Art.12.21).

h. Detailed **EV** system schematic (Art.12.22).

i. **Vehicle** specific functional switching diagram (Art.14).

j. Crash HV Isolation FMEA (Art.16.8).

k. Details of throttle fail safe system (Art.18).

l. Off-board charger details (Art.5.1).

m. On-board charger details (Art.19.2).

2.11. In addition to the **Vehicle** the **Entrant** must provide the following to enable the inspection to proceed:

a. Completed Technical Inspection form.

b. Detailed Build log with photos of the HV system components and installation.

c. Photos of the **EV** components / features to be added to the **EVP.**

d. Evidence of team personnel HV qualifications.

e. An Emergency Services Guide specific to the **Vehicle** undergoing inspection.

f. The team HV qualified person.

g. HV tools and safety equipment required to support the inspection.

h. Example of the off-board charger to be used.

2.12. The **Vehicle** will be examined at a location mutually agreed between the **Entrant** and the **ASN**. If inspection of the **EV** system requires access to the underside of the **Vehicle** a suitable **Vehicle** hoist or lift will be required. The use of jacks and axle / chassis stands is not permitted. The **Venue** must have a mains power supply suitable for the off-board charger.

2.13. A second inspector may be present (for training and/or HV safety reasons) at the inspection.

2.14. The entrant will bear all fees arising from and the costs incurred by the inspection.

2.15. The entrant is responsible for ensuring that the **Vehicle** satisfies all the **ASN EV** requirements and is presented for inspection in a finished and competition-ready condition.

2.16. All items on the Inspection Checklist must be clearly visible to the inspector without using instruments such as endoscopes or mirrors. Visible access may be provided by removing body panels or via removable access panels. Covers on the traction battery must only be removed by the nominated team HV qualified person if requested by the technical inspector.

2.17. Demonstration of the correct function of the indication and safety systems and the on/off-board charging systems forms part of the inspection. Correct response to a simulated crash **Event** must also be demonstrated by the HV safety system.

2.18. The inspection of **Bespoke EVs** will examine all items included on the **EV** Inspection Checklist plus any other items the inspector may wish to examine. The exact procedures and instruments employed for inspection and testing are entirely at the discretion of the Technical Inspector.

2.19. The Inspection of Modified **EVs** will focus on ensuring that the installation of the safety items (ROPS, seat, fire extinguisher) has not damaged or disturbed any part of the **EV** system. It is prohibited to reposition any part of the **EV** system (including cables).

2.20. If any part of the **Vehicle EV** system does not comply with the requirements or is deemed to be a concern, the entrant must correct the problem and re-present the **Vehicle** for inspection. Minor faults may be rectified immediately, major issues will require a new inspection to be arranged and paid for.

2.21. The decision of the **ASN** inspector concerning compliance with the **EV** regulations is final and cannot be appealed.

Scrutineering

3. Safety

3.1. Except for **Standard EV**s in non-**Speed Events**, only **ASN EV** trained **Scrutineer**s will perform safety scrutineering on **EVs**. It is recommended that all **Scrutineers Scrutineering EV**s complete the **EV Awareness** online training module.

3.2. Except for **Standard EV**s in non-**Speed Events** a valid VP or EVP must be provided at **Safety Scrutineering**.

3.3. HV **Vehicle** Safety scrutineering procedures will include but not be limited to visual inspection of the **EV** system and demonstration of the correct function of the safety and indication systems.

3.4. For **Bespoke EV**s the Team HV qualified person must be present at **Safety Scrutineering** equipped with their own set of HV safety equipment and tools as required.

3.5. The **Vehicle** specific Emergency Response Guide must be provided to the circuit/**Venue**/**Organiser's** emergency services team before the **Vehicle** is allowed to compete.

3.6. **ASN Technical Officials** can require the **Vehicle** to be re-inspected at any time during an **Event**.

4. Eligibility

4.1. Except for **Standard EV**s in non-**Speed Events**, only **ASN EV** trained **Scrutineers** will perform eligibility scrutineering on **EVs**.

4.2. **ASN Technical Officials** reserve the right to request access to any set-up information or data from the **Vehicle** ECU(s) and other electrical devices at any time during an **Event** including data that proves compliance with Arts.7.3 and 7.5.

4.3. It is the responsibility of the **Competitor** to prove that the **Vehicle** has not exceeded any control parameter limits during an **Event** (e.g. maximum power, maximum voltage etc.).

4.4. **ASN Technical Officials** reserve the right to request that the **Vehicle** be fitted with a data logger.

4.5. For **Bespoke EV**s the Team HV qualified person must be present at **Eligibility** scrutineering (equipped with their own set of HV safety equipment and tools as required) and be prepared to safely isolate the HV system and remove any HV components for more detailed inspection at the request of the **Scrutineer.**

5. Charging

5.1. Off-board chargers must be commercially available and meet all UK Electrical safety requirements. Details must be supplied to the **ASN** 3 months prior to the **Vehicle** inspection.

5.2. **Standard** and **Modified Vehicles** must use the unmodified on-board charger, charge port and charging cable(s) supplied with the **Vehicle**.

5.3. Charging of the RESS must be done with the battery(s) in-situ.

5.4. Any temporary charging installation must be installed and connected to the mains supply by a trained competent person following the Code of practice for **Electric Vehicle Charging Equipment Installation**, 5th edition and meet all the requirements of BS7671: 2018 (the 18th Edition wiring regulations), with particular attention paid to earthing.

5.5. The charging system must be automatic and must ensure that the RESS cannot be overcharged or damaged if left permanently connected to the charger.

5.6. The use of diesel or petrol generators to provide the energy to charge **EVs** is strongly discouraged. **ASN** are working with **Circuit** / **Venue** owners to investigate provision of sustainable charging facilities.

IN ADDITION A BESPOKE ELECTRIFIED VEHICLE MUST COMPLY WITH Arts.6–19.

6. Motor and Inverters

6.1. A maximum of two motors, whose output are combined mechanically driving the wheels through a mechanical gearbox and differential are permitted. A maximum of two inverters are permitted. In **Drag Racing** there is no limit on the number of motors or inverters.

6.2. Only a single driven axle is permitted i.e. FWD or RWD.

6.3. Any system that achieves torque vectoring across or between axles is prohibited.

6.4. Hub / wheel motors are prohibited.

6.5. Only commercially available production motors and inverters are permitted.

6.6. Repurposing of OEM motors and inverters is permitted.

6.7. The inverter may be integrated with or separate from the motor. The motor may be integrated with or separate from the gearbox.

6.8. Brushed DC motors are permitted and motors with exposed commutators must be fitted with a commutator shield.

6.9. If the motor or inverter is liquid cooled, >51% water- based coolant must be used. The use of Dielectric fluid is prohibited.

6.10. If the motor is air cooled, all ventilation holes must be small enough to prevent the passage of a 12mm diameter spherical test object through all holes.

6.11. When an electrical motor casing is rotating around the stator, a scatter shield must be included to surround the rotating parts of the motor. The shield must be constructed from min 2mm steel or 3mm thickness aluminium alloy. Does not apply to motors fully enclosed in the transmission housing.

6.12. All motor and inverter connections that use bolted HV terminals must be fitted with moulded insulated terminal covers that are sealed to satisfy a minimum IP65 rating.

6.13. All HV power electronics on the **Vehicle** (including inverter, motor, charger and DC/DC converter must be designed to work safely at the maximum voltage on the Power Bus.

Rechargeable Energy Storage System (RESS)

7. General

7.1. The RESS must be comprised of a maximum of 2 separate traction battery enclosures per **Vehicle**.

7.2. Capacitor and flywheel energy storage systems are prohibited.

7.3. For **Bespoke EVs** the maximum total power going out of the RESS at any time is limited to 500kW, except for **Drag Racing** where the limit is 1MW.

7.4. For **National Type Approved EVs** the power out of the RESS may not exceed the homologated power.

7.5. For **Bespoke EVs** the maximum voltage on the Power Bus must never exceed 900V, except for **Drag Racing** where the limit is 1000V.

7.6. For **National Type Approved EVs** the maximum voltage must not exceed the homologated maximum voltage.

7.7. The RESS must include appropriately specified fuses or circuit breakers to prevent over-current in the event of short circuit. The protection devices must be located inside the RESS as close as possible to the main power bus connectors.

7.8. The RESS must be capable of being isolated from the Power Circuit by at least two independent systems (e.g. contactor or a manually operated Service Switch). There must be at least one manually operated system and one automatic system (under control of the BMS or Electronic Control Unit). The Service Switch may be a High Voltage (HV) or Low Voltage (LV) device. Any HV device should be orange and designed such that no HV potential is exposed when the device is operated / removed. If HV Service switches are used, they must be fitted into each battery pack. If a LV switch is used, only one is required (preferably mounted on one of the battery packs). The location of the Service Switch(es) should be clearly marked.

8. Enclosure

8.1. The RESS must be installed within the survival cell, passenger compartment, engine compartment or boot of the **Vehicle**. Underfloor installation of the RESS is permitted if full impact protection is provided to meet the 60kN FIA impact energy requirements. Full details of the impact protection must be provided to **ASN** 3 months prior to the **Vehicle** inspection.

8.2. The RESS must not be used as a stressed member.

8.3. Calculations must be provided to the **ASN** 3 months prior to the vehicle inspection to confirm that mechanical and electrical safety is ensured in a crash. The RESS may be required to pass a crash test defined by the **ASN**. See **ASN** website for an example calculation for a battery module and battery pack

8.4. The RESS enclosure must be to a minimum rating of IP65.

8.5. Modules must be mechanically secured inside a metallic or composite enclosure. Any covers or access panels must be sealed and secured with fasteners requiring tools to remove.

8.6. The RESS must be designed to prevent short circuit of the conductive parts. In the event of compartment or component deformation, the design must ensure that no fluids enter the cockpit / **Passenger** compartment.

8.7. The RESS must prevent the build-up of an ignitable gas / air or dust / air concentration inside the compartment by means of a burst valve or vent tube, positioned away from the **Driver.** Any vent tube if fitted must discharge direct to atmosphere external to the **Passenger** compartment or survival cell.

8.8. All HV connections to the RESS must be made using either proprietary HV connectors with High Voltage Interlock Circuitry (HViL) or the cables must pass through HV rated cable glands of suitable size to match the cable and which preserve the IP rating of the external enclosure.

8.9. The enclosure containing the modules must also contain the BMS voltage and temperature sensing elements associated with the modules, service switch, fuses / circuit breakers and contactors.

9. Modules

9.1. Off-the-shelf commercially available or repurposed production modules must be used to make RESS packs. It is prohibited to assemble RESS modules or packs from individual cells.

9.2. It is prohibited to modify the modules in any way.

9.3. The **Competitor** must supply documents from the module producer specifying safety relevant data, including manufacturers' datasheet: UN38.3 report and Material Safety Data Sheet (MSDS). Including RESS characteristic diagram showing the limits of voltage (U), power (W), temperature (T) and State of Charge (SoC). These documents must be provided to **ASN** 3 months prior to the **Vehicle** inspection. Equivalent data from a 3rd party test house may be submitted in place of manufacturers data. Evidence of test house capability must be included as part of the submission.

10. Battery Management System

10.1. A **Battery Management System (BMS)** from an approved supplier is mandatory.

10.2. For **Modified EVs** the architecture of and functionality of the **BMS** must not be changed from standard.

10.3. The **BMS** must ensure that all cells do not exceed the manufacturers stated limitations for voltage, current and temperature under any circumstances.

10.4. The **BMS** in all cases must monitor every serial cell for voltage and a minimum number of cells (evenly distributed throughout the modules/pack) for temperature in order that the hottest, coldest and average cell temperatures are monitored. Full details of the temperature monitoring must be provided to **ASN** 3 months prior to the **Vehicle** inspection.

10.5. In the event that any cell exceeds the manufacturers stated limitations for voltage and / or temperature, within 2 seconds the **BMS** must reduce power to less than 5kW in order to leave the course or automatically isolate the RESS from the traction circuit if it is not safe to reduce power.

11. Cooling

11.1. If the RESS is liquid cooled, >51% water-based coolant must be used.

11.2. The cooling liquid must not come into direct contact with any active components within the RESS.

12. Electrical Equipment and General Electrical Safety

12.1. Specifications for general electrical safety are laid down in Appendix J – Article 253-18.1.

12.2. Specifications for the Power electronics (inverters, DC / DC converters, on-board charger etc.) are laid down in Appendix J – Article 253-18.5.

12.3. Any **Vehicle** with an electrical system operating at a voltage exceeding 60V DC or 30V AC must display the label detailed in **App.13 Diagram 6** next to all **Competition Numbers**. Label minimum size 75mm x 75mm x 75mm.

12.4. In cases where the voltage of the **Power Circuit** belongs to voltage class B (2.9), symbols warning of "High Voltage" must be displayed on or near the protective covers of all electrical equipment that may operate at high voltage (**App.13 Diagram 6**). The symbol background must be yellow, and the bordering and the

arrow must be black, in accordance with ISO 7010. Each side of the triangle should measure at least 120mm but may be reduced to fit onto small components.

12.5. No HV potential should be exposed anywhere on the **Vehicle** during normal operation.

12.6. The design of the system must be such to ensure that a single point of failure cannot cause an electric shock hazardous to life.

12.7. HV Electrical cables and electrical equipment must be protected against any risk of mechanical damage (stones, corrosion, mechanical failure, etc.) as well as any risk of fire and electrical shock.

12.8. The voltage class B components and wiring must comply with the applicable sections of IEC 60664 on clearances, creepage distances (3.4.2) and solid insulation; or meet the withstand voltage capability according to the withstand voltage test given in ISO/DIS 6469-3.2:2010.

12.9. A plug must physically only be able to mate with the correct socket of any sockets within reach. All HV Power Circuit connectors must not have live contacts on either the plug or the receptacle unless they are correctly mated.

12.10. All parts of the electrical equipment must be protected using an appropriate IP class with min IP65 protection on all HV components.

12.11. The HV traction circuit must be isolated from the **Vehicle Chassis.**

12.12. All HV cabling must comply with LV 216-2, ISO 6722 and ISO 14572 Construction of HV wiring systems for **Hybrid** and **Electric Vehicles**. All cables must be orange and shielded, either internally or by conduit and must be securely fixed to the **Vehicle** chassis using insulated fixings. Tie wraps are not acceptable. Cable conductor material must be copper. The use of aluminium bus bars and terminals is permitted.

12.13. All cable terminals must be crimped, or laser welded with a certificate of conformity if not OEM produced. The use of soldered terminals is prohibited.

12.14. All HV cable runs must be a single contiguous piece of cable between connectors / terminals. Any cable joins or splices must be achieved using bolted terminals securely fixed in a min IP65 rated enclosure with glands / strain relief on the cable entry points. Any covers or access panels must be sealed and secured with fasteners requiring tools to remove.

12.15. Any HV ancillary equipment (contactors, relays, fuses, current shunts etc.) not located in the RESS enclosure(s) must be securely located in a min IP65 rated enclosure with glands / strain relief on the cable entry points. Any covers or access panels must be sealed and secured with fasteners requiring tools to remove.

12.16. All Class B Power Circuit connectors must not have live contacts on either the plug or the receptacle unless they are correctly mated. An automatic HViL (High Voltage Interlock) system must be present in every HV connector and detect if a Power Circuit connector is de-mated, for example with shorter alarm contacts within the same connector and inhibit / remove High Voltage from both the plug and the receptacle. If the connector was live when de-mated, the high voltage must be switched off immediately and any residual voltage on the contacts of both the plug and the receptacle discharged to <60V DC within 4 seconds. Re-mating of the connector must not re-energise the circuit.

12.17. All class B Power Circuit connectors and cabling must provide mechanism for locking, strain relief and sealing to the cable assembly.

12.18. All major conductive parts of the body must be connected e.g. with wires of appropriate dimension to obtain equipotential bonding.

12.19. No part of the **Chassis** or bodywork should be used as a current return path.

12.20. The distribution of high currents in the HV DC network must be made in a star-point configuration and not in a loop, in order to avoid potential shifts resulting from current flows. The star-point of the electrical reference potential is referred to as “Power Circuit Ground".

12.21. 12:21 Every part of the electrical equipment must have a minimum insulation resistance between all live components and earth of 500 Ohms per volt. The measurement of the insulation resistance must be carried out using a DC voltage of at least 100 volts.

12.22. 12:22 Unless the function is already provided by the **BMS** a proprietary isolation surveillance system must be used to continuously monitor the status of the isolation barrier between the voltage class B (2.9) system and the **Chassis** while the HV system is energised.

12.23. If not part of the **BMS** the proprietary isolation surveillance system must be located within the RESS enclosure and wired in series with the main RESS contactors. If an isolation fault is detected, the system shall open the circuit breaker automatically and trigger the “Danger” state of the RESS Status Indicator. Full details of the isolation surveillance system must be provided to **ASN** 3 months prior to the **Vehicle** inspection.

12.24. The **Competitor** must provide a detailed “Emergency Services Guide” documenting all aspects of the HV system including component locations and details of the standard and emergency HV isolation procedures. This document should be structured in the same way and have similar content to the guides provided by OEM’s for production **EVs** and must be provided to **ASN** 3 months prior to the **Vehicle** inspection.

12.25. See **App.13 Diagram 3** for an example of the **EV** System Schematic showing all components and connections. The **Vehicle** specific version must be provided to **ASN** 3 months prior to the **Vehicle** inspection.

12.26. On **Vehicles** without a 12v alternator, a DC / DC converter of suitable power rating must be provided to charge the auxiliary battery and electrical system.

12.27. The auxiliary battery must never be used to recharge the RESS.

SAFETY EQUIPMENT.

13. Driver master switch

13.1. All **Vehicles** must be equipped with a general circuit breaker of sufficient capacity and which can be operated easily by a switch from the driver’s seat when the **Driver** is seated in a normal and upright position, with the safety belts fastened and the steering wheel in place and from the outside to cut off all electric transmission devices.

13.2. This switch MUST act as a General Circuit Breaker that interrupts ALL electrical transmission between the RESS and all other HV circuits by means of a spark-proof circuit breaker providing galvanic switching which MUST NOT be short- circuited by any components such as a pre-charge resistor. Low power batteries provided for low voltage circuits, for example auxiliary circuits, do not have to be isolated by the general circuit breaker provided that they are completely isolated from the main power accumulators.

13.3. In the event that the circuit breaker is activated, the HV potential, outside the RESS, must drop below 60V DC with 4 seconds.

13.4. Specifications for the General Circuit Breaker are laid down in Appendix J – Article 253 18.17.

14. Fire Extinguisher

14.1. All **Vehicles** must be equipped with an electrically operated plumbed in extinguishing system in accordance with **App.6 Art.1.1.** Only systems with an extinguishing medium proven to not create a conductive atmosphere and in compliance with the below list are authorised:

- Novec 1230 or FX G-TEC FE36.

15. Extinguisher switches

15.1. The system must have three points of triggering, one for the **Driver** and two exterior actuators. These external actuators must be situated at the base of the main rollover structure on both sides of the **Vehicle** for a single seater or at the lower corners of the windscreen for a closed cockpit **Vehicle**.

15.2. A means of triggering from the outside must be combined with the general circuit breaker switches.

15.3. The actuators must be marked with a letter "E" in red at least 80mm high, with a line thickness of at least 8mm, inside a white circle of at least 100mm diameter with a red edge with a line thickness of at least 4mm. See App.13 Diagram 4 for an example.

15.4. Pressing the fire extinguisher button must also activate disconnection of the High Voltage Battery.

15.5. The electrical circuits for the fire extinguisher and the RESS isolation must be electrically separated by the use of a two-pole momentary-on button that is waterproof to IP67.

15.6. When using a homologated fire extinguisher system designed for an ICE it is permitted to exchange the trigger buttons for alternatives that comply with the requirements listed herein.

16. Marshal Neutral Switch

16.1. To enable a marshal to isolate the RESS from the power bus in less than 2 seconds, external switch(es) which operate the general circuit breaker must be provided, which:

16.2. For a single seater, a single switch must face upwards and be recessed into the top of the survival cell no more than 150mm from the **Vehicle** centre line and less than 150mm from the front of the cockpit opening and less than 70mm from the extinguisher switches defined in Art.12.6.

16.3. For a saloon two switches must face upwards and be recessed into the windscreen scuttle on either side, no more than 150mm from the side of the **Vehicle**, 350mm from the door aperture and less than 70mm from the extinguisher switches defined in Art.12.6.

16.4. Each switch must be designed such that the power circuit cannot be energized using the external switch. The method of triggering (push, pull or rotation direction) must be clearly marked.

16.5. Each switch must be marked with a red spark in white edged blue triangle with a base of at least 120mm. The angle of the triangle where the spark is pointing to, must point to the button. It must be associated with a letter "N" in blue inside a white circle at least 50mm in diameter and with a blue edge. The height of both symbols must be at least 100mm. See App.13 Diagram 5 for an example.

16.6. It is prohibited to cover the external switches in any way whatsoever.

16.7. In a crash all energy sources of the Power Circuit must be switched off automatically and the full RESS must be isolated. The arrangements must be validated by the Failure Mode and Effects Analysis (FMEA) which must be provided to **ASN** 3 months prior to the **Vehicle** inspection. An FIA approved Accident Data Recorder may be used to initiate the shutdown.

16.8. 16.8 All switches (**Driver** Master, Neutral and Extinguisher) must operate at a nominal 12V.

16.9. See App.13 Diagram 3 for an example of the functional switching diagram. The **Vehicle** specific version must be provided to **ASN** 3 months prior to the **Vehicle** inspection.

16.10. Safety Indicator requirements are based on the specifications laid down in Appendix J – Article 253 18.22.

16.11. All indicators must have a viewing angle of at least 120° and a luminous flux of at least 8 lumens.

17. HV RESS status light

17.1. All **Bespoke Vehicles** with a HV RESS must be fitted with a HV RESS Status indicator light, which:

a. Is a Red/Green light that indicates the safety status of the RESS.

b. Must be in working order throughout the **Event** even if power on the **Vehicle** has failed.

c. Indications must be visible from any point around the car, manufacturer may install multiple devices to achieve it.

d. Remains powered for at least 15 minutes after the general circuit breaker is activated.

e. Is marked with a “HIGH VOLTAGE” symbol (see App.13 Diagram 6).

f. Has repeater indicator light on the dashboard the replicates the states of the main light. This does not have to comply with Art.8.5.

17.2. See App.13 Chart 4 for the HV RESS Status indicator states.

17.3. **Ready-to-Move-light**

17.4. All **Bespoke EVs** that have an **EV** system that is capable of propelling the **Vehicle** must be fitted with a Ready- to-Move light, which:

a. Is a white light (at the front) and an orange light (at the rear) that will illuminate to indicate that the **Vehicle** can move if the throttle pedal is pressed.

b. Must light up and illuminate to the front and rear of the **Vehicle** respectively, parallel to the centre line of the **Vehicle**.

c. Will flash “on” for 0.05 seconds and “off” for 2 seconds whilst the **Vehicle** is charging.

d. Will flash "on" for 0.5 seconds and "off" for 0.5 seconds if, when the system has been requested to energize and the bus voltage has not exceeded 50V.

17.5. See Chart 5 for the Ready-To-Move indicator states.

18. Throttle failsafe

18.1. All **Bespoke Vehicles** must be equipped with a throttle fail safe system, which in case the throttle and brake pedal are pressed at the same time, overrides the throttle and cuts the power to the propulsion system. The details of the fail- safe system must be provided to **ASN** 3 months prior to the **Vehicle** inspection.

19. Bespoke Vehicle Charging

19.1. **Bespoke Vehicles** must use a charging system compliant with a recognised charging standard and be able to use public chargers (SAE J1772, IEC 62196, CHAdeMO or Combined Charging System (CCS)) and must follow standard protocols for connecting/disconnecting the charge connector and initiating/stopping the charging process. Only a single external charge port is permitted.

19.2. **Bespoke Vehicles** must use a commercially available on-board charger (if fitted) and if liquid cooled, >51% water- based coolant must be used. Details must be provided to **ASN** 3 months prior to the **Vehicle** inspection.

CHAPTER 7 COMPETITOR VEHICLE AND VEHICLE SAFETY EQUIPMENT

Appendix 12 - Scrutineering

This Appendix must be read in conjunction with **Chapters 2 – 5** and **8** and **9** as well as relevant discipline Chapters and all **Official Documents.**

1.1. **Technical Officials** are **Officials** of the **Event.**

1.2. At all times it is the responsibility of the **Competitor** to establish that the **Vehicle** presented is in conformity with the **Regulations** of the **Event.**

1.3. Before taking part in any **Competition** or **Practice** for any **Competition** requested **Vehicles** must be presented to the **Event Scrutineers** for examination and approval.

1.3.1 The main purpose of **Pre-Event Scrutineering** is to check, as far as possible under the prevailing conditions, the safety of the vehicle and safety equipment for compliance with **Technical Regulations** and to superficially check its eligibility for a particular class or category.

1.4. The fact of obtaining a **Scrutineer's** approval at pre-**Event** scrutiny does not indicate that the **Scrutineer** is accepting any responsibility for the safety or the roadworthiness of the **Vehicle** nor does it indicate that the **Vehicle** complies in all respects with the **Regulations**. Please note that pre-**Event Scrutineering** or **Vehicle** Passport inspection by a **Scrutineer** is only a spot check of a limited number of key safety and eligibility features of a **Vehicle's** condition. Approval does not guarantee that the **Vehicle** meets all applicable regulations or standards and which at all times is the responsibility of the **Competitor.**

1.5. Subsequent to pre-**Event** scrutiny any **Vehicle** involved in an accident or having been modified in any way must be represented to the **Scrutineers** for further examination.

1.6. At any time during an **Event** the **Clerk of the Course** or the **Scrutineers** (or where applicable to the **Stewards of the Event**) may order that a **Vehicle** be examined or re-examined even if this involves stopping a **Vehicle** whilst **Practising** or competing.

1.7. At the conclusion of a **Competition** a number of **Vehicles** as agreed by the **Clerk of the Course** and the **Scrutineers** or as ordered by the **Stewards** or as laid down in the **Regulations** may be required to be presented for **Post-Event** scrutiny. Such **Vehicles** will then be in **Parc Ferme** regardless of their actual location. No work is to be done on such **Vehicles** after finishing the **Competition** except by permission or request of the **Scrutineers** until after the examination is completed and the **Vehicle** released. It is the responsibility of the **Competitor** to provide appropriate tools and personnel within an agreed time to carry out the work required.

1.8. The post-**Event** scrutiny will be mainly directed at the **Vehicle's** eligibility and may involve parts of the **Vehicle** being sealed for subsequent stripping and examination. Subject to the overriding authority of the **ASN (Ch.1 Art.1.4)** this should normally be within a maximum of 30 days after sealing although it can be extended by mutual agreement between the **Organisers** and the **Competitor** to 50 days. Subject as stated above at the end of the season series or championship it should never exceed 30 days.

1.9. **Vehicles** or components may be sealed on the instructions of the **Clerk of the Course, Stewards of the Event,** the **Technical Commissioners** or following a **Protest (Ch.2).** Sealing may be by wire seals special reactive paint or other suitable method. Such seals must not be broken except with the written permission of the person who originally affixed the seal or of the **ASN** or by the person designated to examine the parts in question. The **Technical Commissioner** or **Scrutineer** examining the **Vehicle** or component will report their findings to the **Clerk of the Course** for their action.

1.10. If a sealed **Vehicle** or sealed component is to be examined other than at the **Event** by a third party on behalf of the **Organisers** then the **Stewards of the Event** and the **ASN** must be notified before the date of any such examination and the **ASN** may impose condition on that examination.

1.11. Approval of a **Vehicle** will only be in relation to those items of the **Vehicle** which have been examined and will only apply to the **Event** which the **Vehicle** has just completed.

1.12. Where **Vehicle Identification Stickers** are required (App.1 Art.1.11–1.12) part of the scrutineering procedure is to affix an **ASN** sticker to the **Vehicle** in an appropriate position (near to the chassis identification plate if possible). Stickers may only be affixed by selected **Scrutineers**, or by the **ASN** at **ASN** Headquarters.

1.13. Once applied, **Vehicle Identification Stickers** must remain permanently affixed to the **Vehicle.** Damaged stickers can only be removed and replaced by selected **Scrutineers**. New and replacement stickers will be charged at the current fee.

1.14. If a vehicle component or item of **Personal Protective Equipment** is found not to comply with required **Standards** or is in poor or dangerous condition the **Chief Scrutineer** may impound that item for the duration of the **Event**. At the close of the **Event** the item will be made available for return to the competitor. Should the item not be collected within 42 days of the event the item may be disposed of.

1.15. An essential part of the **Pre-Event Scrutineering** should be a sound test.

CHAPTER 7 COMPETITOR VEHICLES AND VEHICLE SAFETY

Appendix 13 - Charts and Diagrams

Chart 1 Maximum Noise Limits

The following table gives alternative distance readings. (Noise measured in dB(A).)

	0.5m	2.0m	
Section 'A'	105	93	**CAR RACE (SALOON AND SPORTS CARS) MAXIMUM AT 3/4 MAXIMUM RPM**
Section 'B'	108	96	**CAR RACE (SINGLE SEATER AND SPORTS RACING CARS) MAXIMUM AT 3/4 MAXIMUM RPM**
Section 'C'	100	88	**STAGE RALLY, AUTOTEST, TRIALS, MAXIMUM AT 4,500 RPM**
Section 'D'	98	86	**ROAD RALLY MAXIMUM AT 2/3 MAXIMUM RPM**
Section 'E'	100	88	**CROSS COUNTRY VEHICLE MAXIMUM AT 2/3 MAXIMUM RPM**
Section 'F'	108	96	**AUTOCROSS AND RALLYCROSS MAXIMUM AT 3/4 MAXIMUM RPM**
Section 'G'	110	98	**HILLCLIMB AND SPRINT MAXIMUM AT 2/3 MAXIMUM RPM – RACING AND SPORTS LIBRE CARS AND CARS COMPLYING WITH Ch.14 App.4 Art.15**
	108	96	**ALL OTHER CATEGORIES**

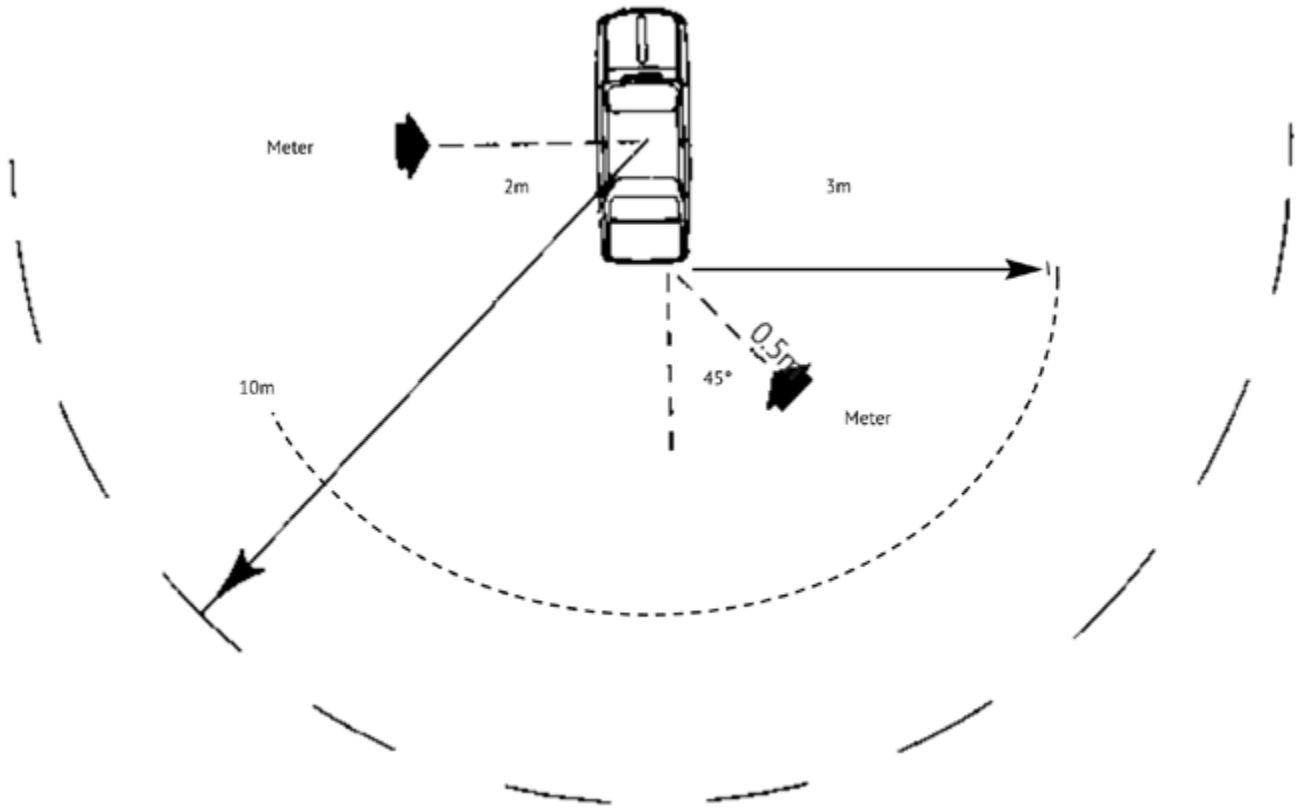

Chart 2 Regulation Summary

Regulation	Description	EV Tech Regs Applicability				
		mHEV	HEV	PHEV	LV BEV	BEV
		LV	HV	HV	LV	HV
Ch.1 App.1 Nomenclature and Definitions		Y	Y	Y	Y	Y
Ch.7 Competitors Vehicles and Vehicle Safety Equipment		Y	Y	Y	Y	Y
Ch.7 App.11 Electrified Vehicles Technical Regulations						
Arts.1.1 - 1.6	Electrified Vehicles	Y	Y	Y	Y	Y
Arts.1.7 - 1.19	Permitted Vehicles	Y	Y	Y	Y	Y
Art.2	EV Passport and Inspection	Y	Y	Y	Y	Y
Arts.3 - 4.5	Scrutineering	Y	Y	Y	Y	Y
Art.5	Charging	Y	Y	Y	Y	Y
Bespoke BEVs						
Art.6	Motors	n/a	n/a	n/a	Y	Y
Arts.7 - 11	Rechargeable Energy Storage Systems	n/a	n/a	n/a	Y	Y
Art.12	Electrical Equipment and General Electrical Safety	n/a	n/a	n/a	Y	Y
Arts.13 - 18	Safety Equipment	n/a	n/a	n/a	Y	Y
Art.19	Bespoke Vehicle Charging	n/a	n/a	n/a	Y	Y

Chart 3: Permitted Electrified Vehicle Types

	Permitted EV's					EV Inspection					Vehicle Passport Requirement				
	mHEV	**HEV**	**PHEV**	**BEV**	**BEV**	**mHEV**	**HEV**	**PHEV**	**BEV**	**BEV**	**mHEV**	**HEV**	**PHEV**	**BEV**	**BEV**
	LV	HV	HV	LV	HV	LV	HV	HV	LV	HV	LV	HV	HV	LV	HV
Vehicle Type															
Standard Electrified Vehicle App.11 Art.1.9	Y	Y	Y	N/A	Y	N	N	N	N/A	N	EVP	EVP	EVP	N/A	EVP
Modified Electrified Vehicle App.11 Art.1.10	Y	Y	Y	N/A	Y	Y 1.2	Y 1.2	Y 1.2	N/A	Y 1.2	EVP	EVP	EVP	N/A	EVP
Bespoke Electrified Vehicle App.11 Art.1.11	N	N	N	Y	Y	n/a	n/a	n/a	Y	Y 1.3	n/a	n/a	n/a	EVP	EVP

Key:

mHEV = Mild hybrid

HEV = Hybrid

PHEV = Plug-in hybrid

BEV = Battery electric vehicle

LV = Low voltage (<30V AC or 60V DC)

HV = High voltage (>30V AC or 60V DC)

EVP = Electric Vehicle Passport

1. Notes:

1.1. Category or discipline specific regulations may impose further restriction on permitted vehicles

1.2. Submission of OEM vehicle specific Emergency Services Guide and visual inspection only

1.3. Full submission of all data requirements contained in EV Tech Regs plus visual and technical inspection and functional test

Chart 4:

HV RESS Status indicator states

Light Status	RESS Status
Green	**Safe**
Red	**Danger (Isolation fault)**

Chart 5:

Ready-to-move indicator states

<table>
<tr><th colspan="2">Light Status</th><th>Vehicle Status</th></tr>
<tr><td colspan="2">Off</td><td>HV system de-energised</td></tr>
<tr><td>White (front)
Orange (rear)</td><td>Always on</td><td>HV system energised – vehicle ready to move</td></tr>
<tr><td>White (front)
Orange (rear)</td><td>Flashing</td><td>Charging or energising</td></tr>
</table>

Diagram 1: Competition Numbers

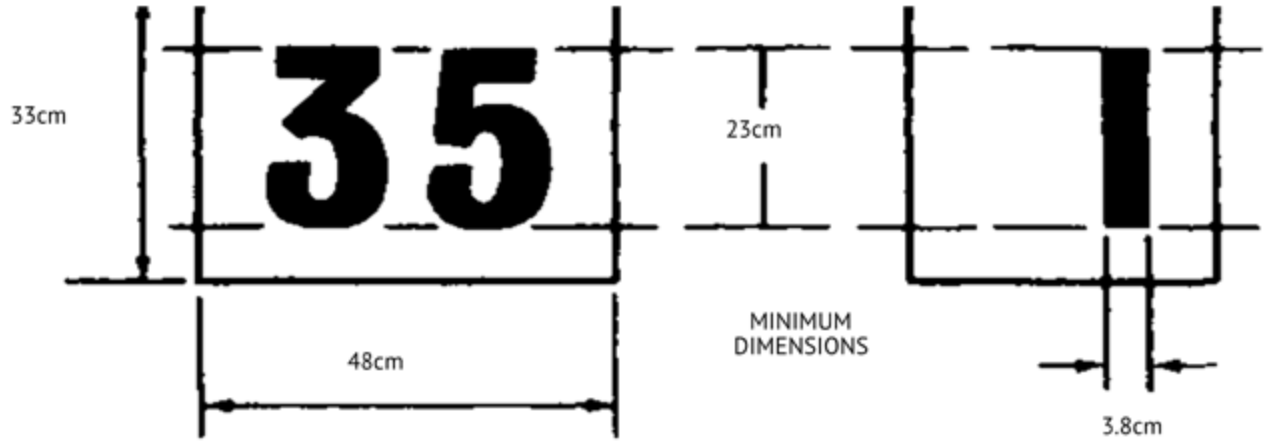

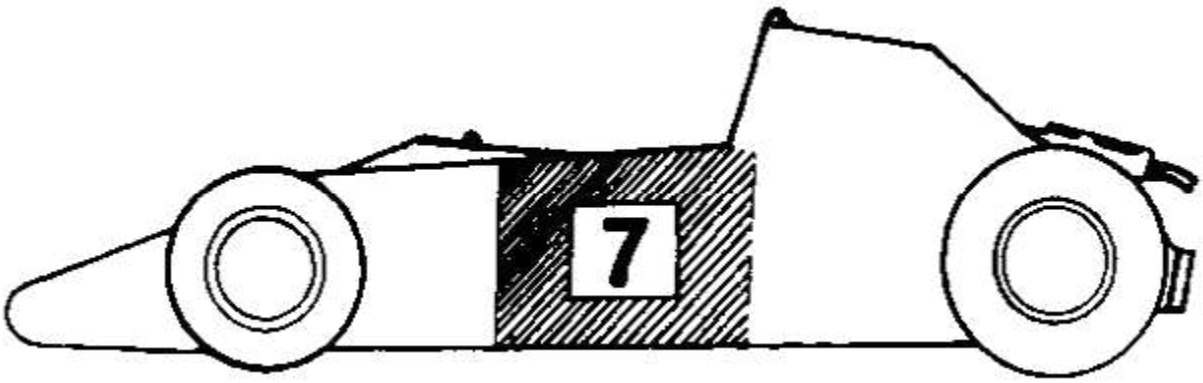

Diagram 2: Steering

(A)

(B)

(C)

Diagram 3: Functional switching diagram example

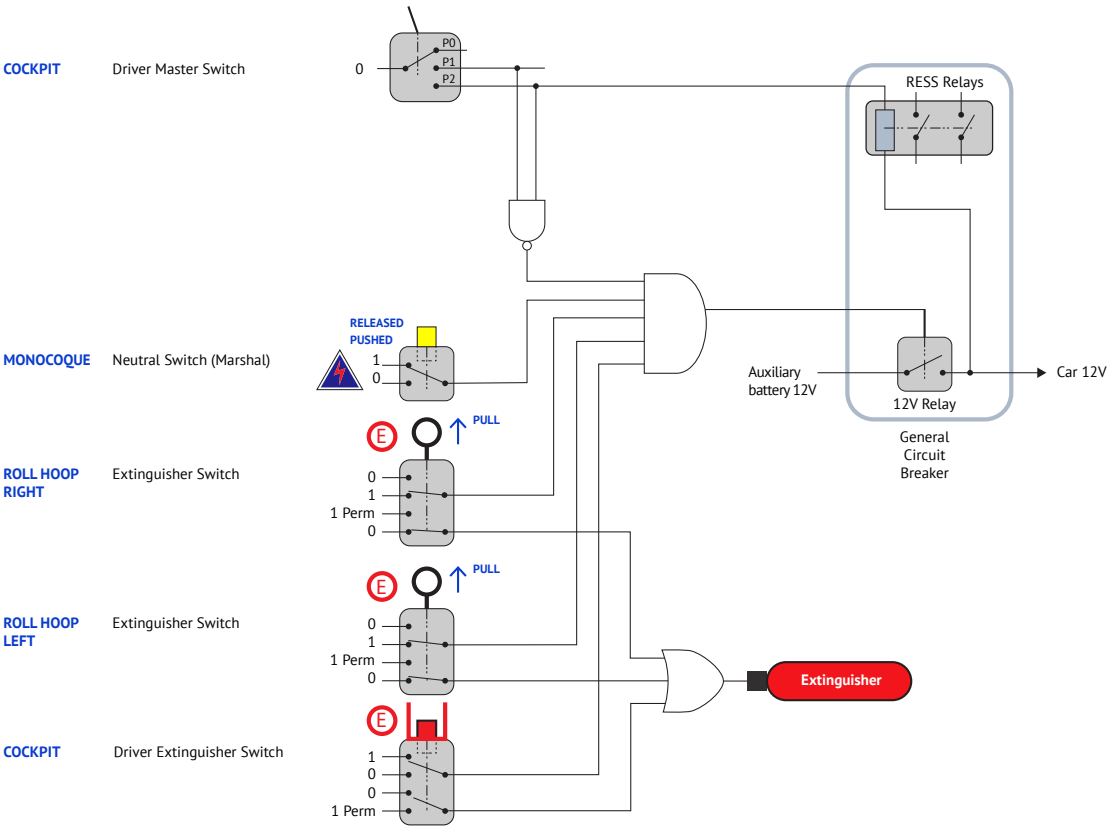

Diagram 4: Fire Extinguisher Warning Symbol

Diagram 5: Marshal Neutral Switch Warning Symbol

Diagram 6: High Voltage Warning Symbol

Diagram 7: Approval Sticker

Diagram 8:

Diagram 9:

HELMET STANDARDS

CMR2007

CMS2007

CMR2016

CMS2016

K2020

SA2020

K2015

SA2015

K2025

SA2025

8860-2010 (a)

8860-2010 (b)

8859-2015

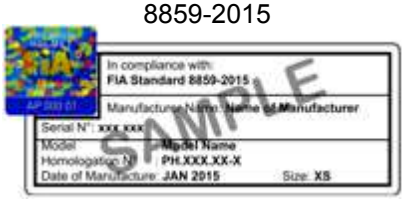

8860-2018

8860-2018-ABP

8859-2024

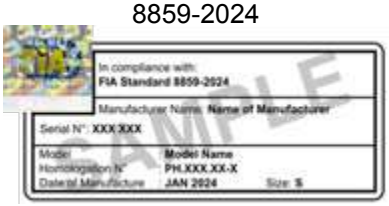

8859-2024-ABP

8878-2024

Safety Cage Drawings

Diagram 10

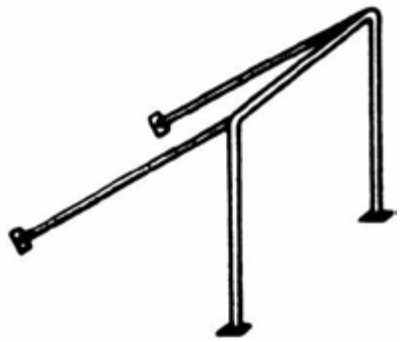

Diagram 11

Diagram 12

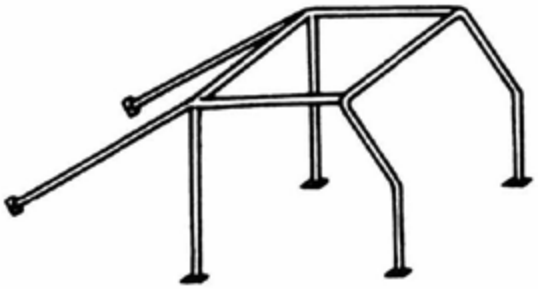

Diagram 13

Diagram 14

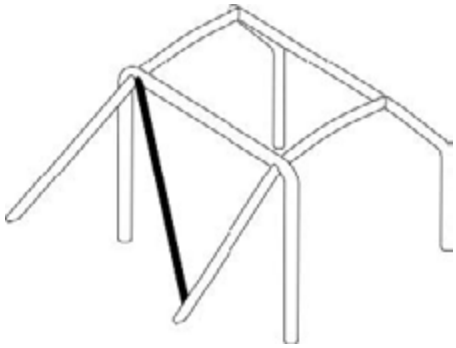

Diagram 15

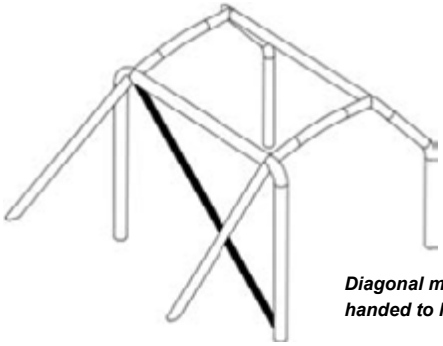

Diagonal may be handed to left or right

Diagram 16

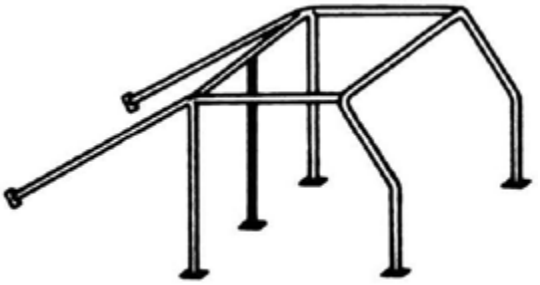

Diagram 17

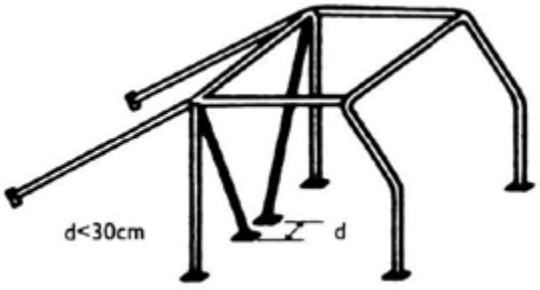

Diagram 18

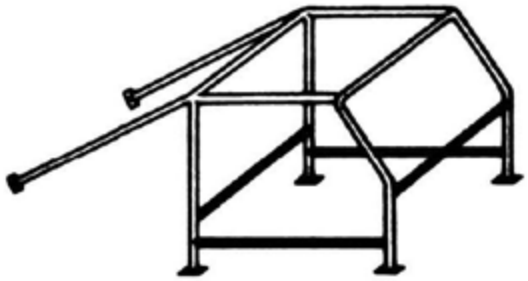

Diagram 19 (a)

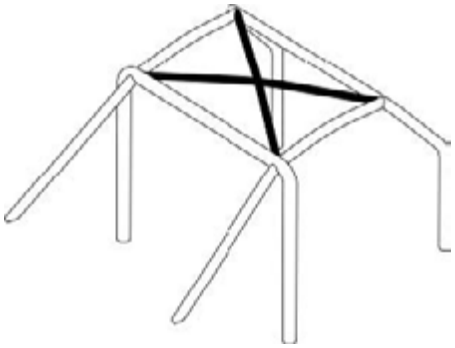

Diagram 19 (b)

Bar may be fitted in either orientation

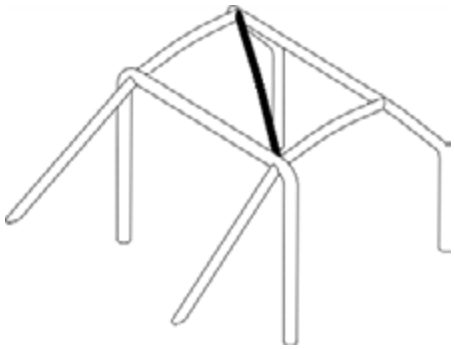

Diagram 19 (c)

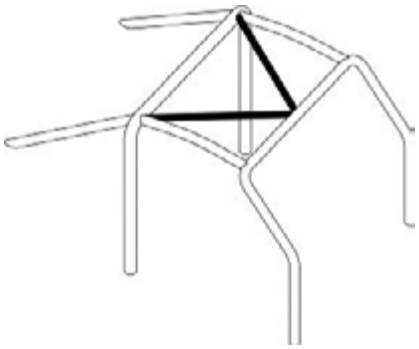

Diagram 19 (d)

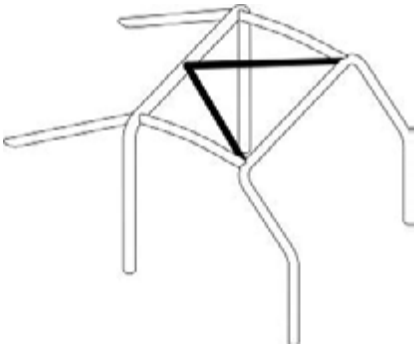

Diagram 20

Diagram 21 Optional Reinforcing Members [6]

(a)

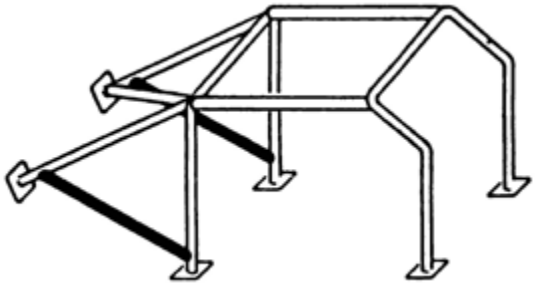

(b)

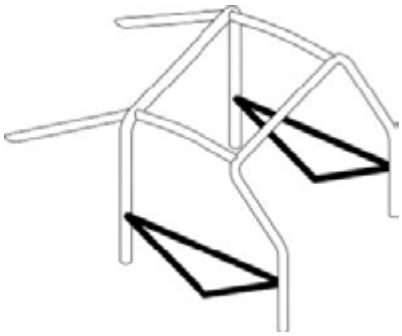

(c)

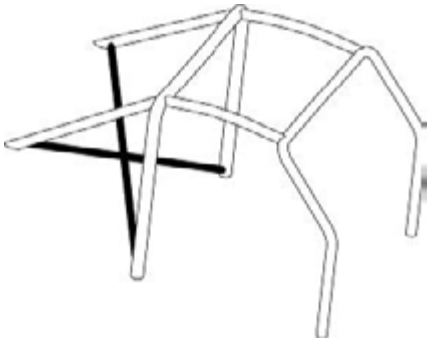

(d)

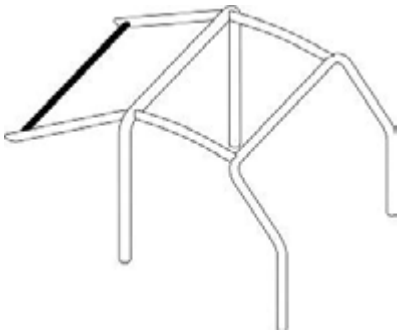

(e)

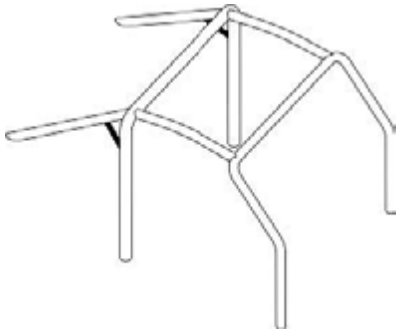

(f)

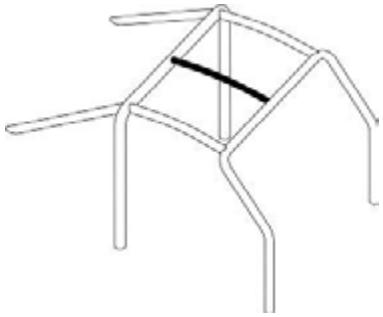

(g)

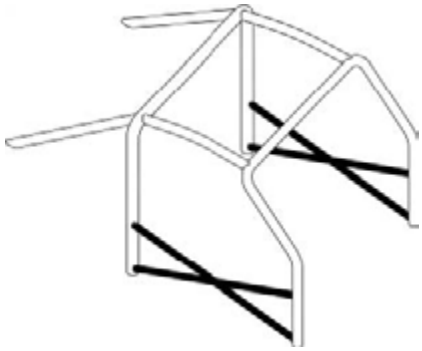

(h)

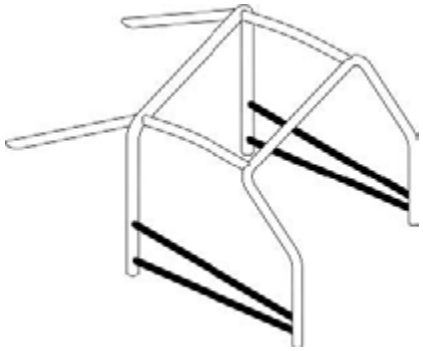

(i)

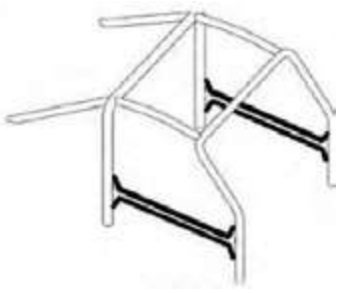

(j)

Diagram 22

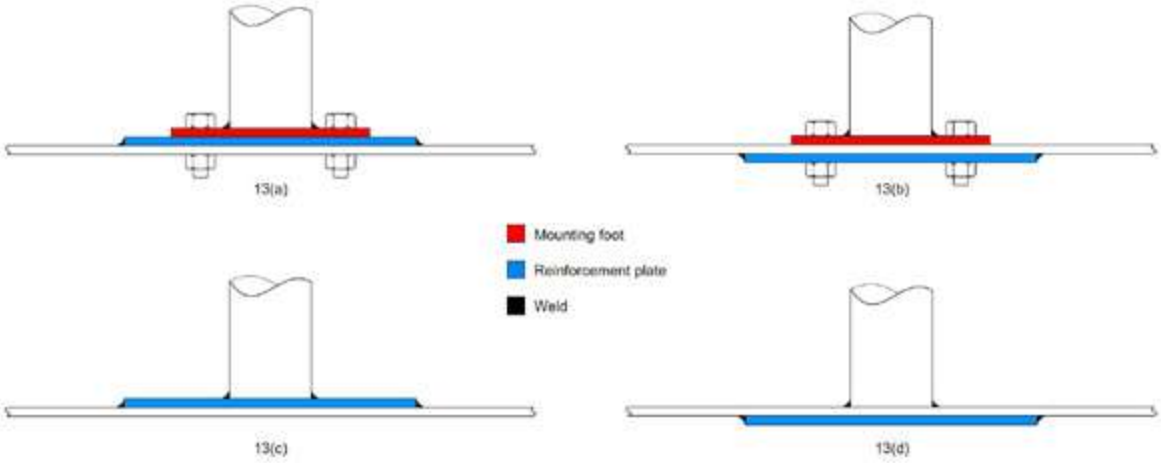

Diagram 23

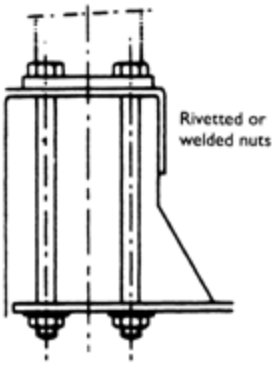

Diagram 24

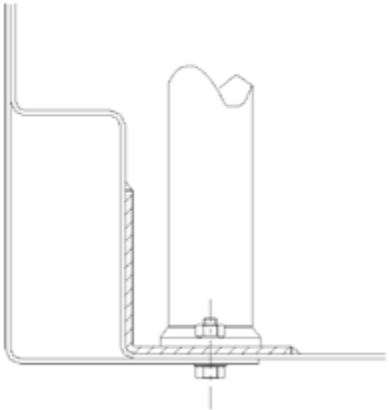

Diagram 25

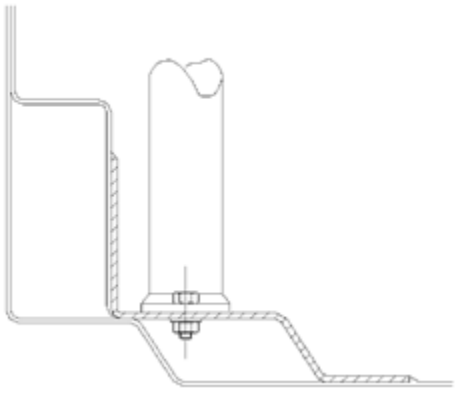

Diagram 26

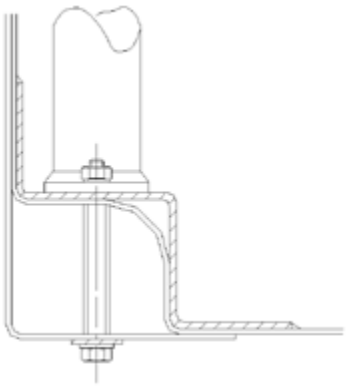

Diagram 27

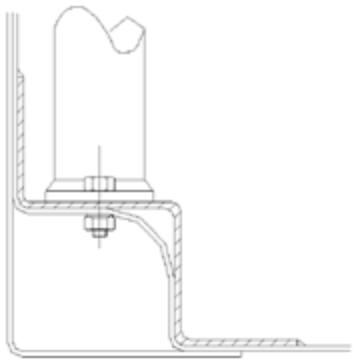

Diagram 28

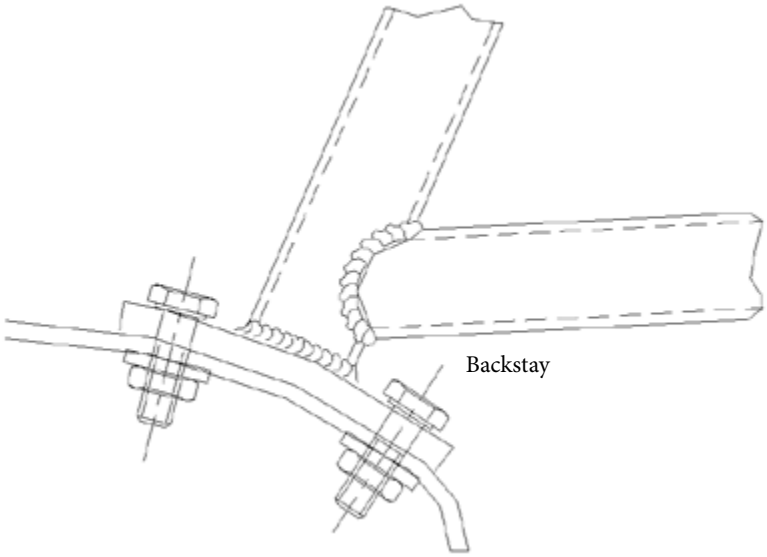

Diagram 29

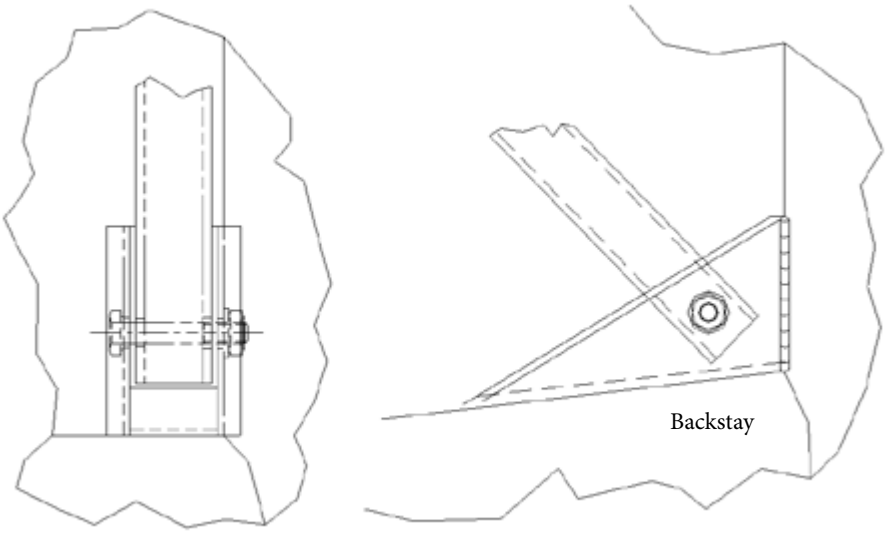

Diagram 30

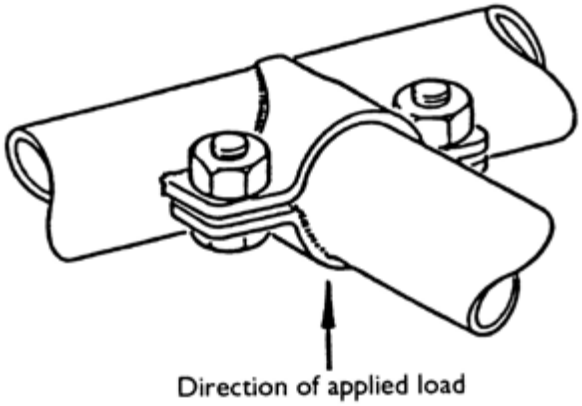

Diagram 31

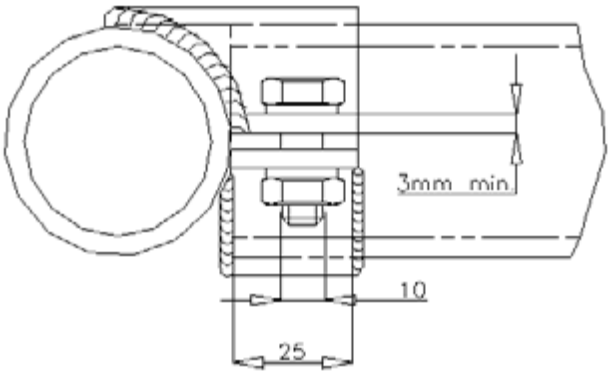

Direction of applied load

Diagram 32

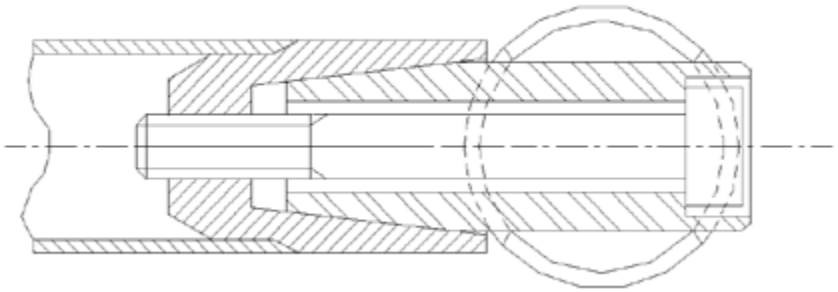

Diagram 33

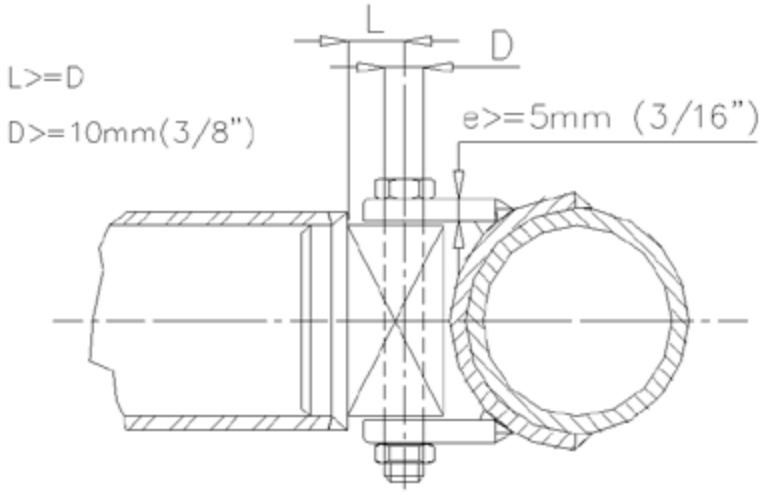

Diagram 34

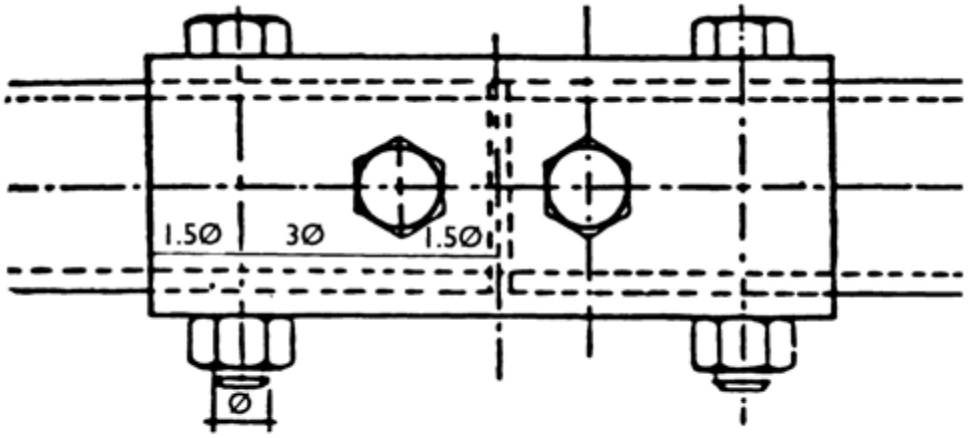

Ø = 14mm (tube≥40mm<50mm diam. ext.)
16mm (tube≥50mm diam. ext.)

Diagram 35

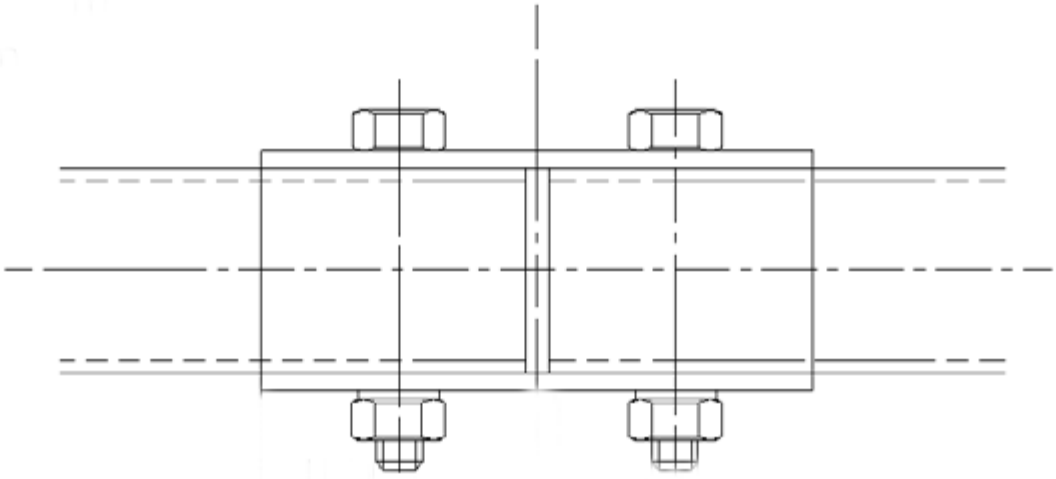

Diagram 36

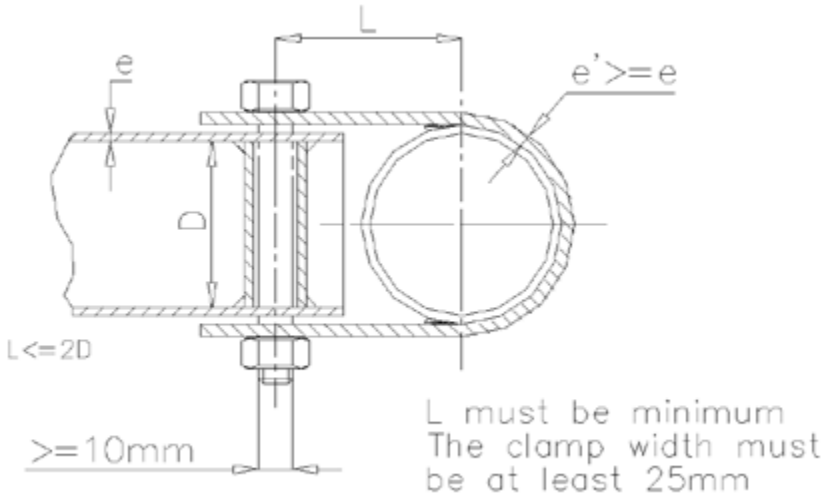

Diagram 37

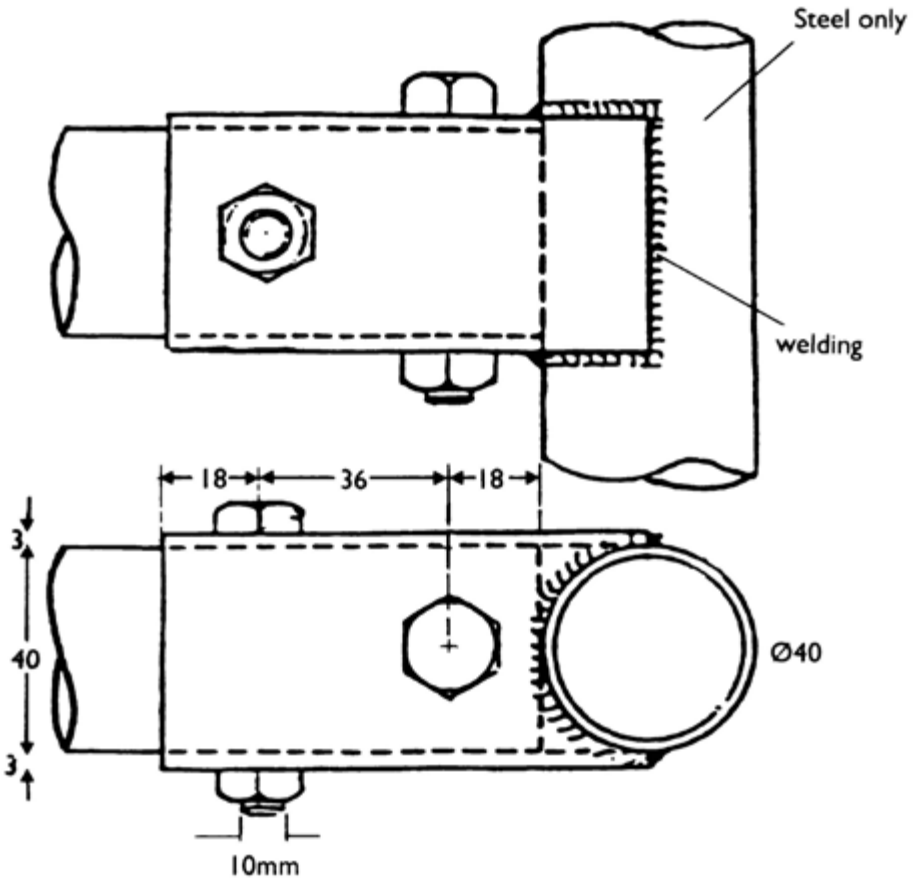

Diagram 38

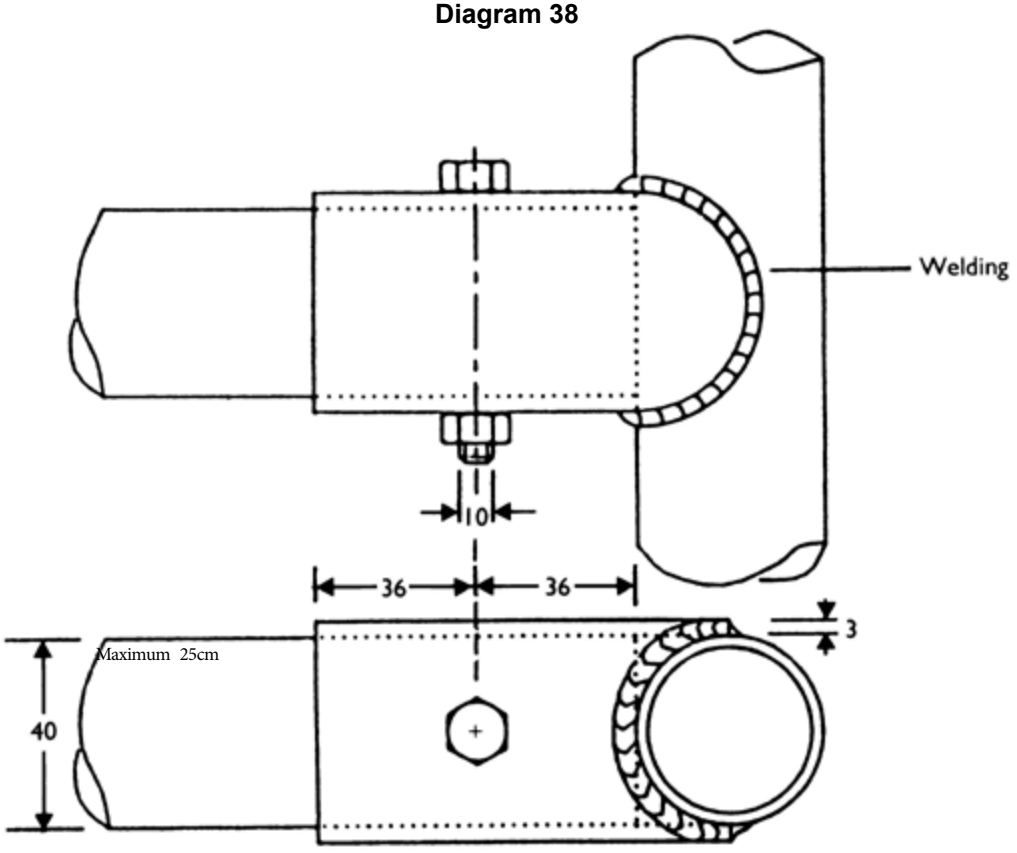

Diagram 39

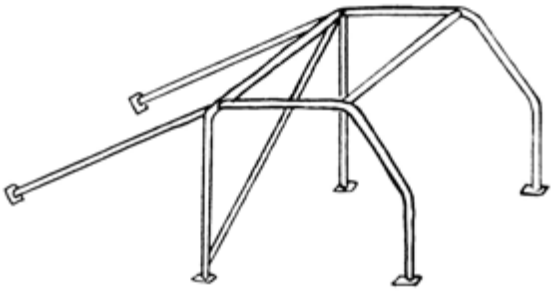

Diagram 40

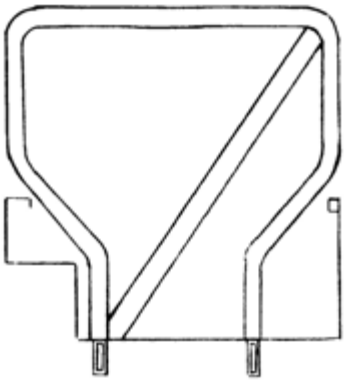

Diagram 41

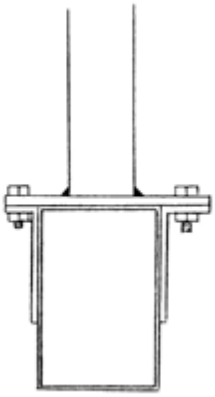

Diagram 42

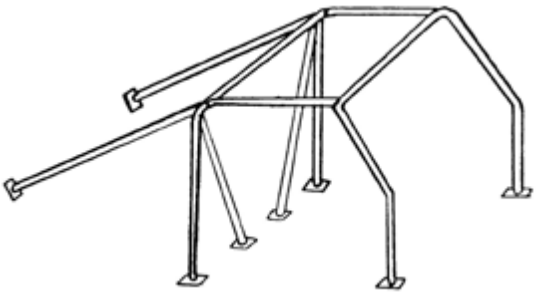

Diagram 43

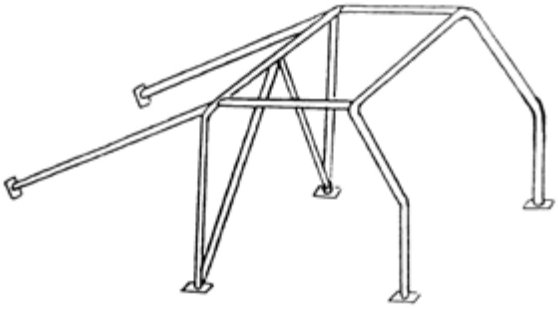

Diagram 44

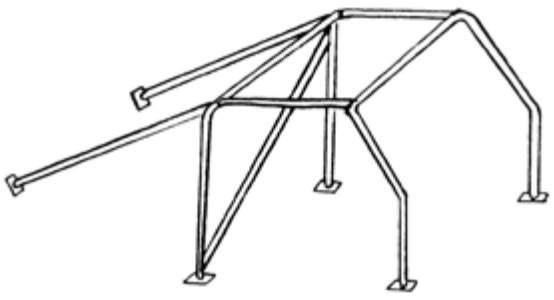

Diagram 45

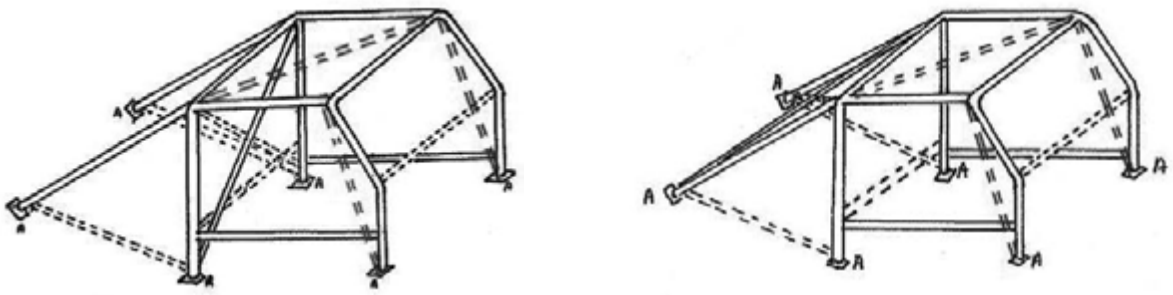

a) Diagonal(s) across Main Hoop

b) Diagonal(s) across Back Stays

Mandatory minimum requirement Maximum options permitted
Mandatory mounting points
Additionally a further 8 points may be attached to the bodyshell.
Competitors should note that an installation to this drawing may contravene **FIA Appendix K** regulations. Doorbars may alternatively be as shown in Diagram 21.g or h.
Roof Reinforcement may alternatively be as shown in **Diagram.19.a** to 19.d.

Diagram 46

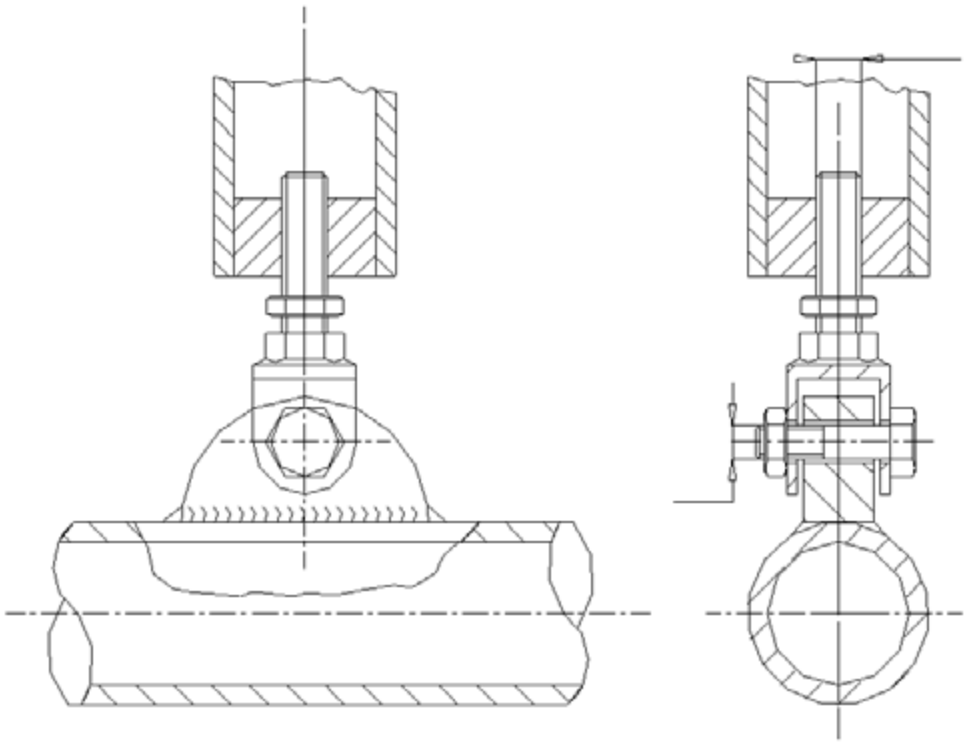

Diagram 47

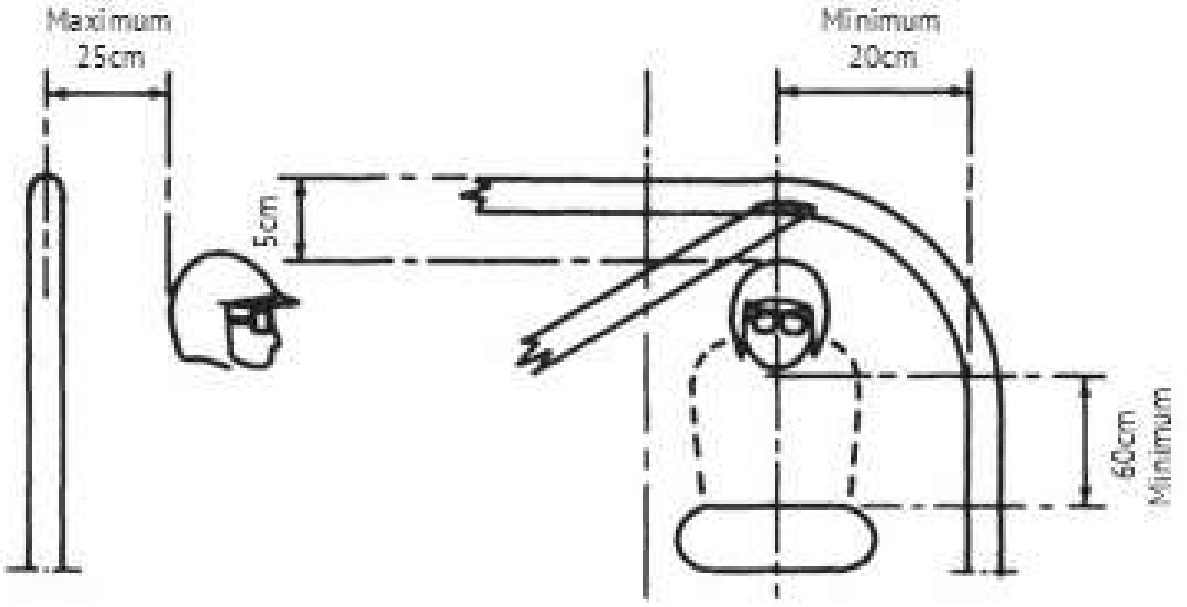

Diagram 48

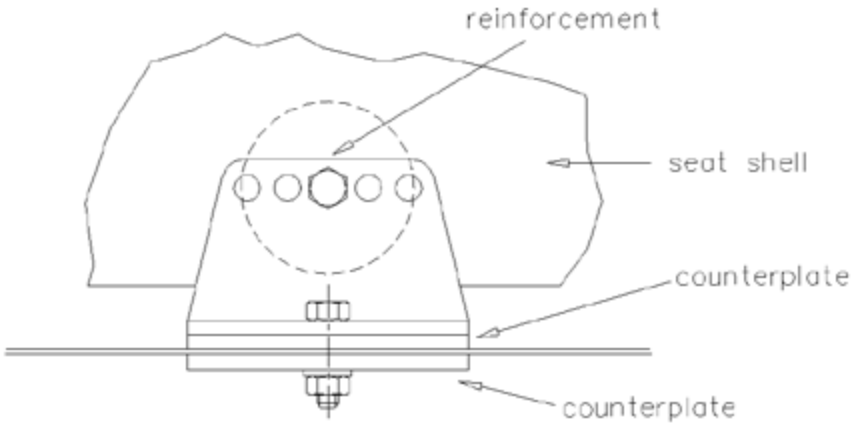

Typical Safety Belt Installation

Diagram 49

(a) **(b)**

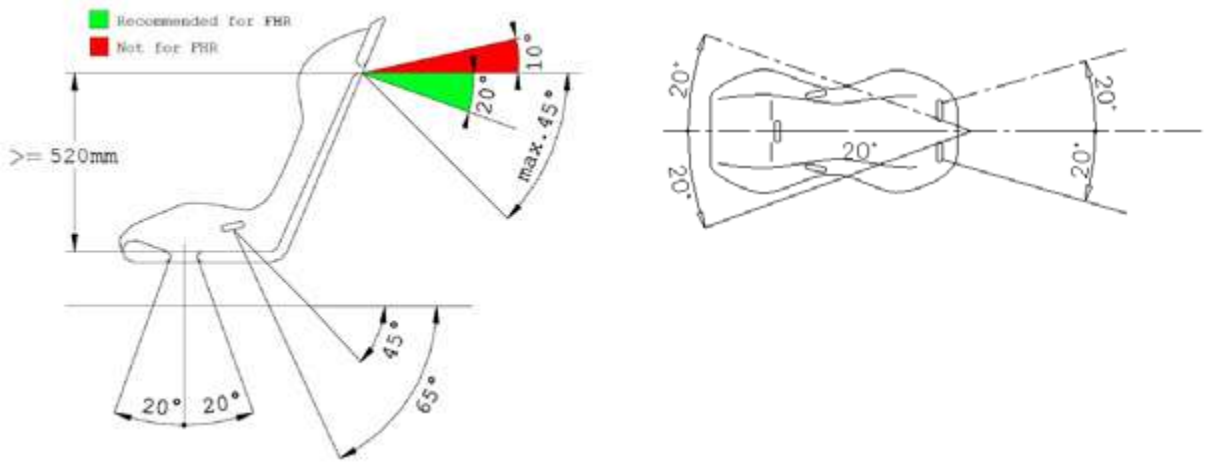

Diagram 50

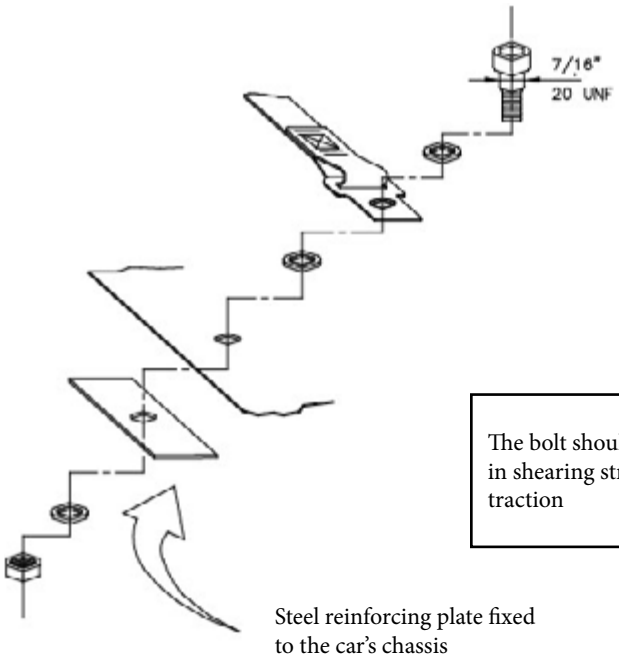

Steel reinforcing plate fixed to the car's chassis

The bolt should preferably work in shearing stress and not in traction

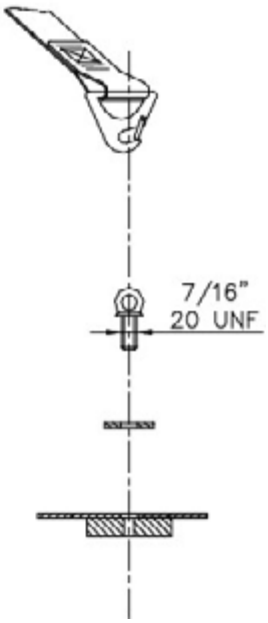

Diagram 51

Plate fixes to the chassis and strengthened by a reinforced plate on the other side

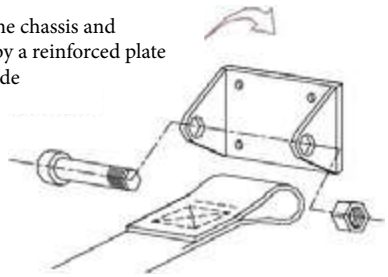

Diagram 52

Reinforcing plate fixed to the car's chassis

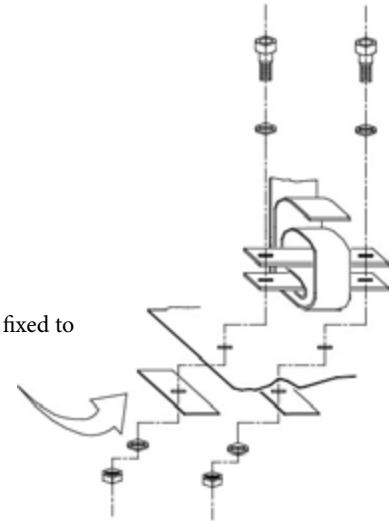

Diagram 53

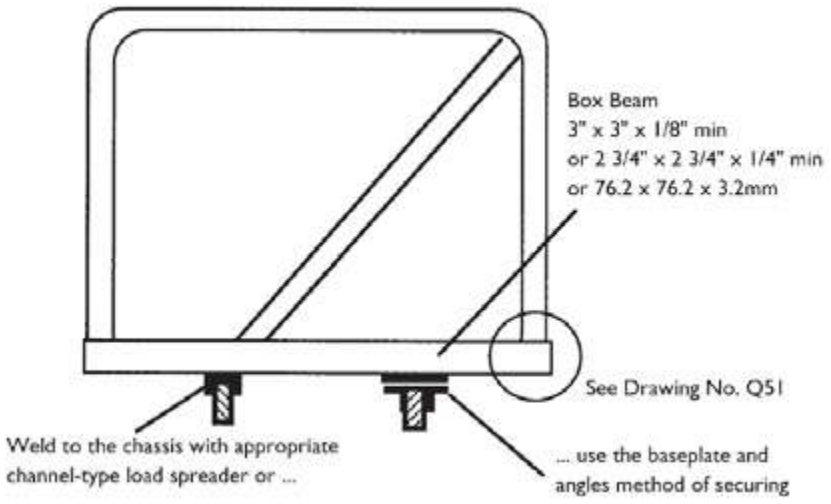

Diagram 54

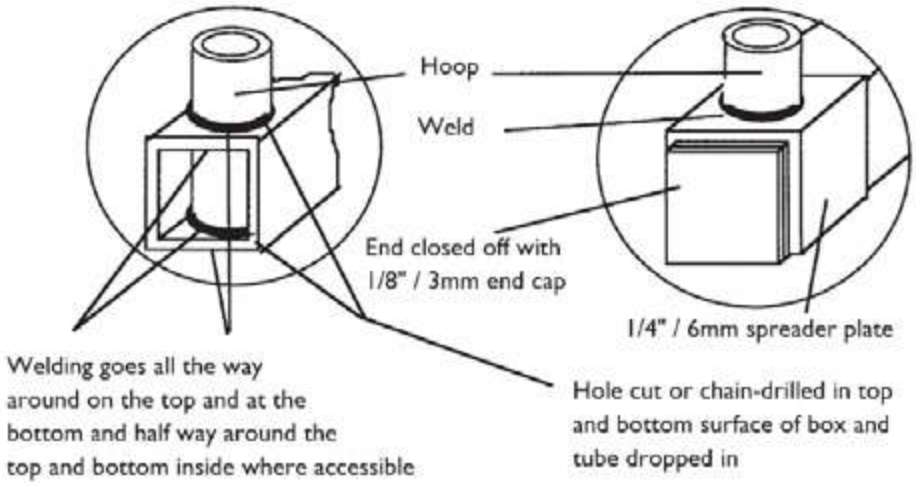

Diagram 55

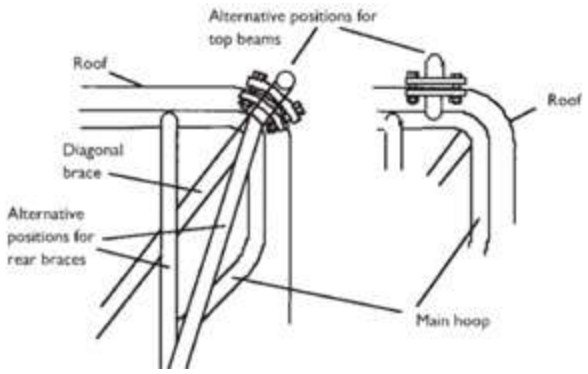

Diagram 56

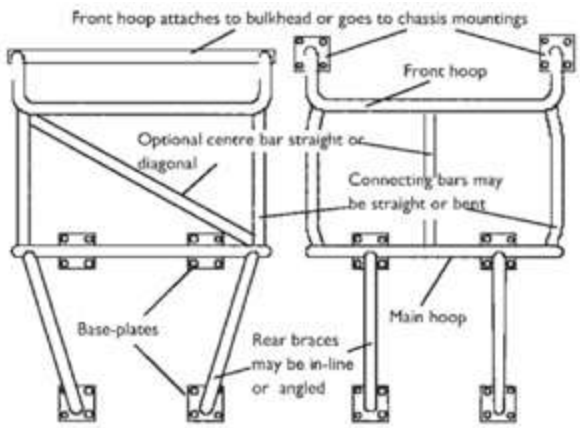

Diagram 57

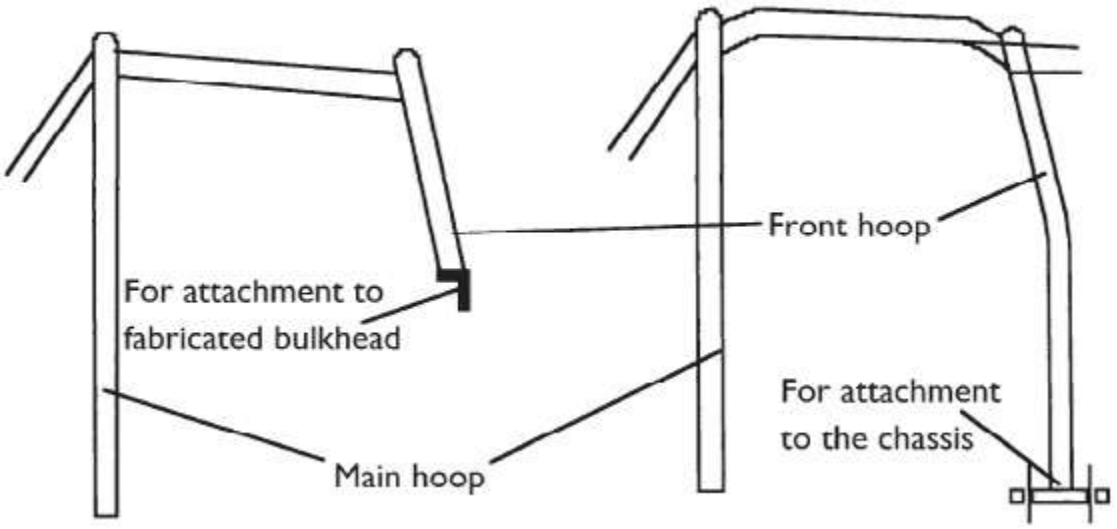

Diagram 58

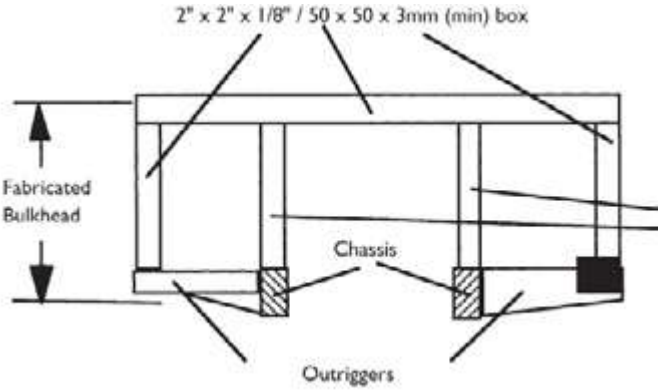

Diagram 59

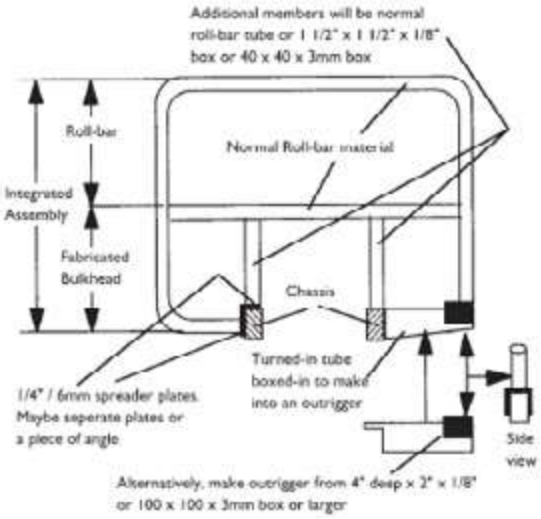

Diagram 60

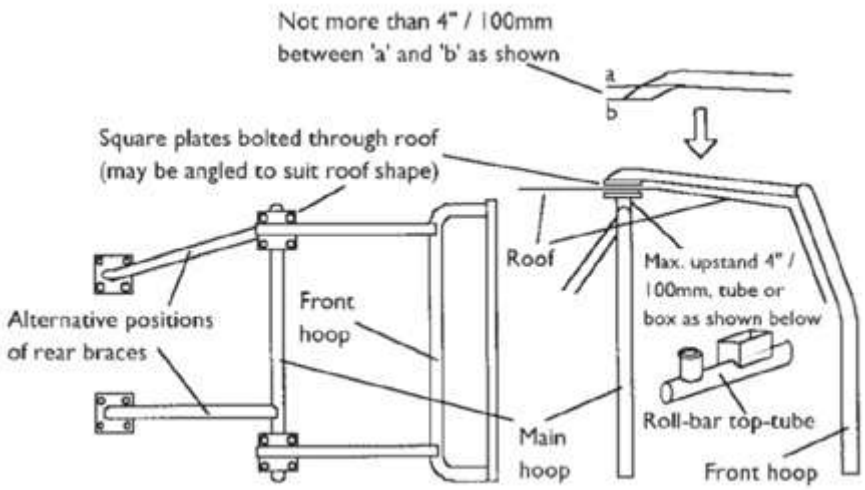

Diagram 61

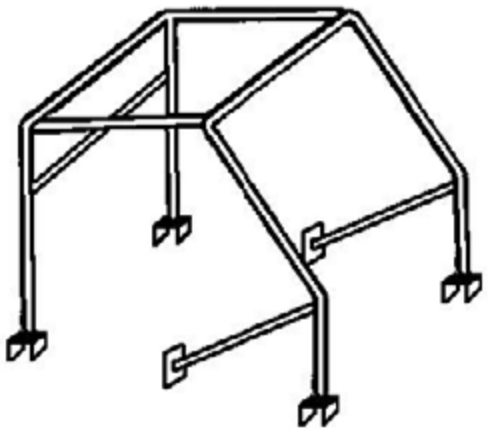

Diagram 62

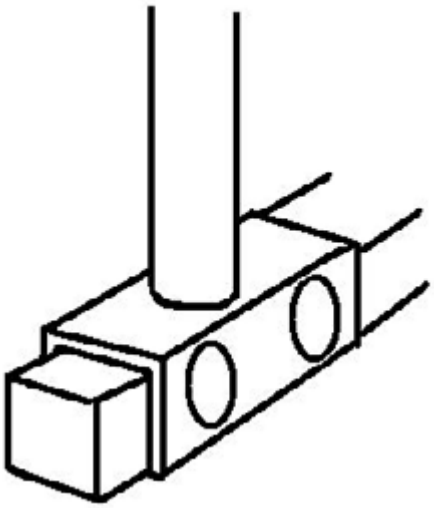

Diagram 63

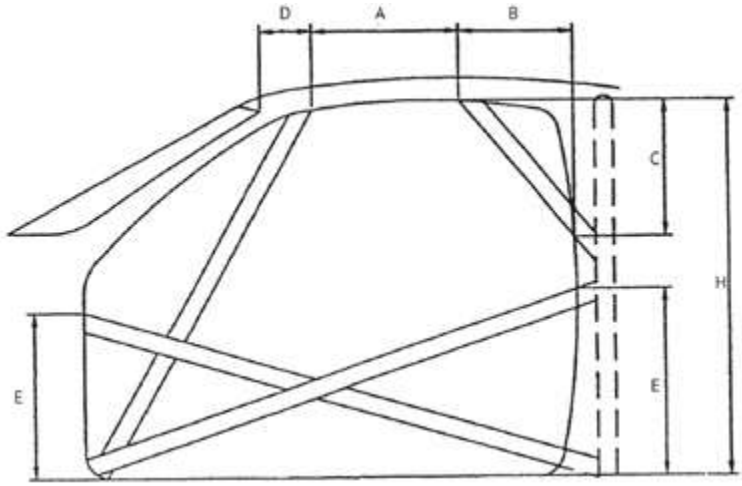

Diagram 64 a

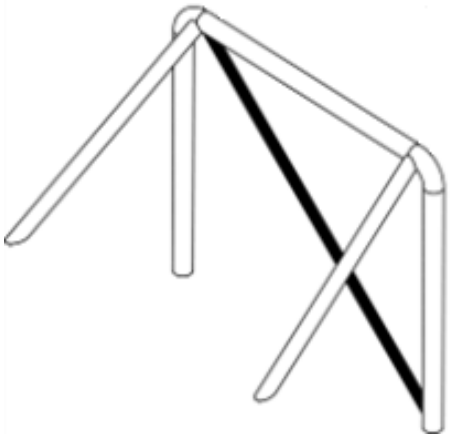

Diagram 64 b

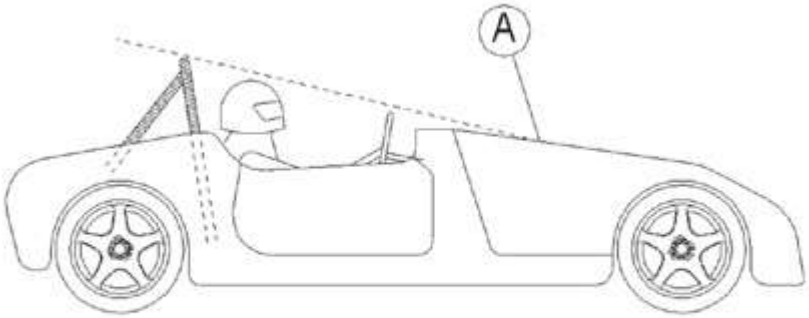

'A' is the substantial structure forward of the driver such as to act as the front rollbar. No part of the driver's helmet is to pass through a line struck from the top of the rollbar to this structure.

Diagram 65

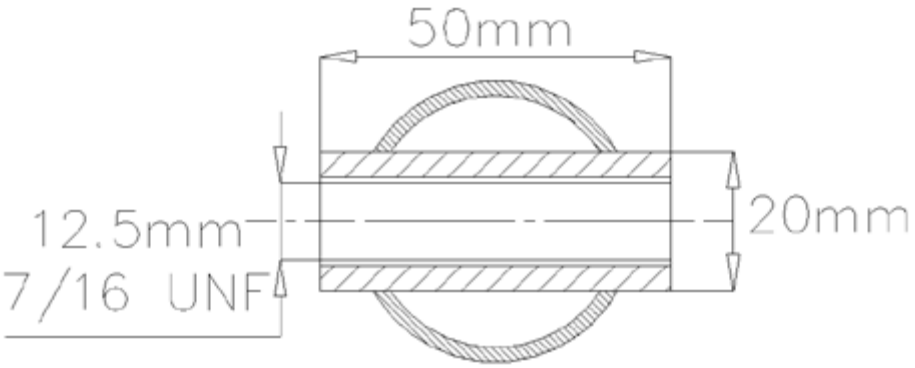

Diagram 66 a

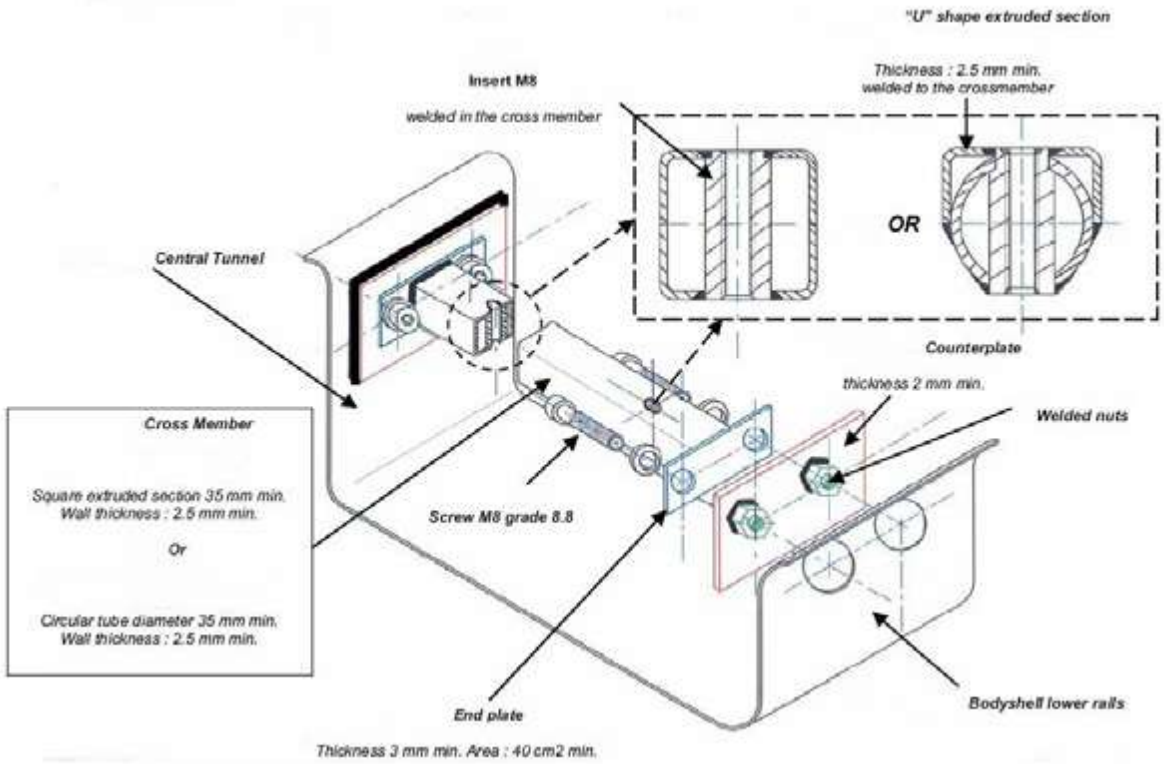

Diagram 66 b

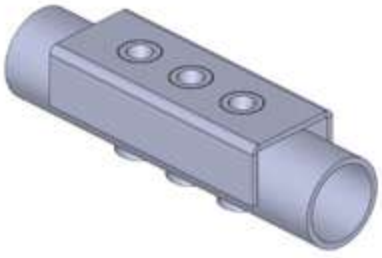

Diagram 66 c

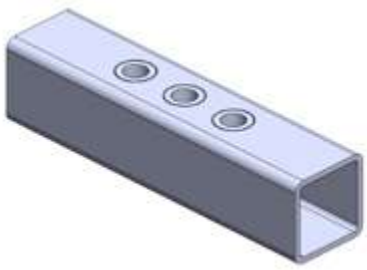

Diagram 67

Dimension B Height over front seats (measured between 0° and 15° towards the rear in relation to the vehicle using the test seat weight)

Dimension C Width for the front seats

Dimension D Height over the rear seats (measured as Dimension B)

Dimension E Width of rear seats.

Dimension F Distance from the centre of the hub of the steering wheel to the brake pedal (if the steering wheel is adjustable it must be placed in the median position).

Dimension G Length from the centre of the hub of the steering wheel to the bulkhead of the rear seat, or if possible to the rear face of the rear seat (maximum tilt 15°) If the steering wheel is adjustable it must be placed in the median position.

B and D are measured between the bottom of the seat compressed by the test seat weight, the axis of which is vertical, and the ceiling (padding compressed). If the seats are separate, the measurement is taken in the middle of each of the seats. In the case of longitudinally adjustable seats, the seats will be placed in the median position. If there is a bench seat in the front, the measurement is taken at 25cm from the centreline of the car.

C and E are the maximum widths measured along the vertical plane passing through the axis of the standard test seat weights placed on the seats, being able to be freely maintained over a height of at least 25cm and a length of at least 40cm. The minimum dimensions (in cm) according to the cylinder capacity (in cm^3) are the following, with H = F+G

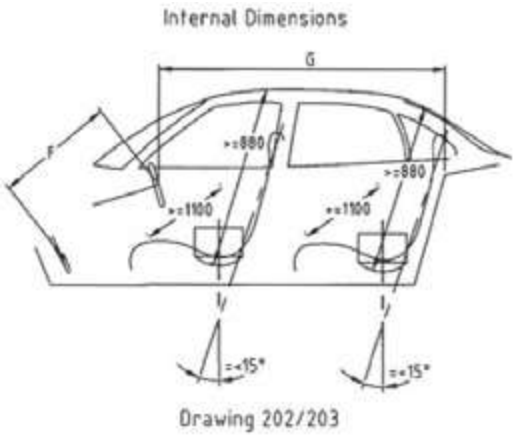

Drawing 202/203

Engine Capacity	Dim. B	Dim. C	Dim. D	Dim. E	Dim. H
From 0 to 1,300	Free	90	Free	90	180
From 1,300 to 2,000	88	110	88	110	200
Over 2,000	93	120	93	120	210

Diagram 68

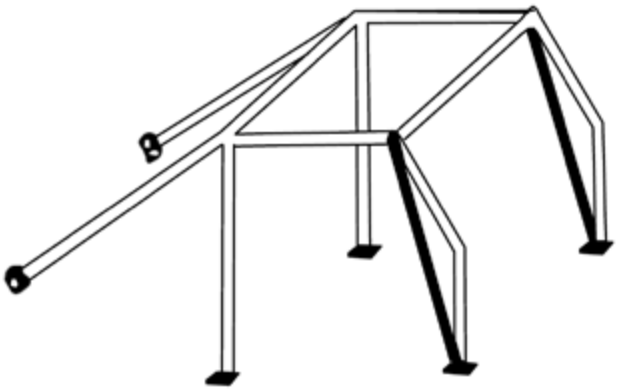

Diagram 69

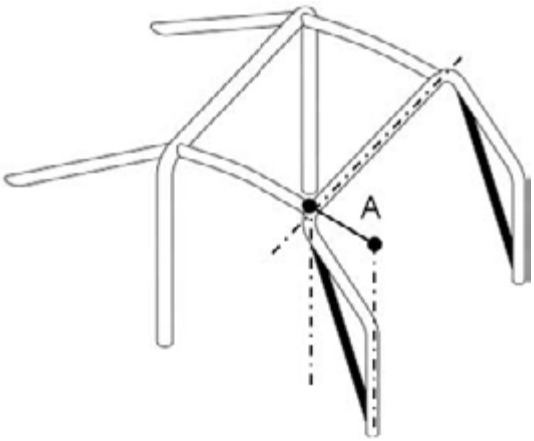

Diagram 70

Chapter 8

Permitted Fuels and Tyres and Testing

CHAPTER 8 - PERMITTED FUELS AND TYRES AND TESTING

This Chapter is separated into the following appendices:

App.1 Permitted Fuels

App.2 Fuel (and other **Vehicle** fluids) Testing

App.3 Tyre Testing and Checking

App.4 Permitted Tyre List

1. General

1.1. This Chapter must be read in conjunction with specific sporting discipline Chapters and where applicable Ch.2 (**Judicial**) and Ch.1 App.1 (Nomenclature and Definitions).

1.2. This Chapter applies to all sporting disciplines **Events** and **Championships** unless specific waiver or variation in respect of the use of permitted fuels or tyres has been approved in writing by the **ASN.**

1.3. In the interests of any of sustainability, Statutory compliance, or sporting fairness the **ASN** reserves the right to amend the **Regulations** in respect of fuel and / or tyres at any time. Wherever possible reasonable notice of any change will be given by publication on the **ASN** website.

1.4. Only Permitted fuels may be used in **Competitions.**

1.5. Only Permitted tyres may be used in **Competitions.**

1.6. It is always the **Competitor's** responsibility while competing to ensure conformity with the relevant **Regulations**.

1.7. Subject to Art.1.8 below it is an offence in breach of the **NCR** to use fuel or to use tyres that are not permitted and which breach may be subject to **Judicial** procedures under **Chapter 2.**

1.8. If it is discovered at pre-**Competition** scrutineering that a **Competitor** has the incorrect tyres this will be reported by the **Scrutineers** to the **Clerk of the Course** and who has the authority to permit the **Competitor** to achieve conformity and re-present the **Vehicle** to the scrutineers for approval but the commencement of the relevant **Competition** shall not be delayed to facilitate such re-presentation.

1.9. All fuel and all tyres may be checked for conformity with the **NCR** in accordance with the prescriptions at App.3 and 4 respectively of this Chapter. It is an offence in breach of the **NCR** to refuse to cooperate with any official test procedure required by the **Organisers** and or the **ASN.** Such a breach may result in **Disqualification** from relevant **Events** and suspension of **Competition Licence** and referral to the **National Court.**

2. Specific matters relating to tyres

2.1. Tyres must comply with **Regulations** for the duration of an **Event** including any **Regulations** regarding tyre pressure.

2.2. Except FF1600 per Art.2.3 below, treaded tyres must have a minimum of 1.6mm tread throughout the circumference of all tyres at the commencement of the relevant **Competition.**

2.3. FF1600 tyres must have a minimum of 1.0mm tread throughout the entire circumference of all tyres at the commencement of the relevant **Competition.**

2.4. Where tyre choice is free it is the responsibility of the **Competitor** to ensure that the tyres used are of adequate speed rating and construction for the **Competition.**

2.5. The fitment and / or use of pressure control valves is prohibited in **Competition.**

2.6. The use of chemical tyres softeners is prohibited unless specifically allowed in **Official Documents.**

2.7. Except for the use of inner tubes (where permitted by the tyre manufacturer), the interior of the tyres being the space between the wheel rim and internal tyre carcass must only be filled with air or nitrogen.

CHAPTER 8 PERMITTED FUELS AND TYRES AND TESTING

Appendix 1 - Permitted Fuels

1.1. Use **Permitted Fuel** (see definition below at Art.1.7 and Ch.1 App.1 Nomenclature and Definitions) except, subject to prior written authority having been given by the **ASN**, where permitted otherwise under **Official Documents**

1.2. If using LPG, the entire system must conform with **Construction and Use Regulations** and **LPG Industry Technical Association Code of Practice No. 11.**

1.3. If using Methanol have a 3-inch diameter 'Day- Glo' orange disc affixed immediately adjacent to the **Competition Numbers** on both sides.

1.4. Any **Vehicle** using methanol must include an **ASN** approved additive which provides a distinguishable colour and smell when burning. The maximum permitted volume of additive within the fuel is 0.2%.

1.5. All **Vehicles** competing in **British** and **ASN Titled Championships** for, and all new build **Vehicles** from 01 January 2013 for, **Rallycross, Car Racing, Special Stage Rallying, Sprints** and **Hill Climbs** (with the exception of **Vehicles** competing in **Sprint** and **Hill Climb Standard Car** and road car categories) must be equipped with the facility to enable a fuel sample to be taken. For fuel injected **Vehicles** the facility must be a dry break fuel sampling coupling, approved by the **FIA**, **Competitors** must carry and make available a 300mm minimum length of hose to which, where necessary, the appropriate mating part is to be attached.

1.6. All **Vehicles** must have sufficient fuel in the **Vehicle** fuel tank for a fuel test (App.2) present at any time during the **Event.**

1.7. The definition of '**Permitted Fuel**' is as follows:

NOTE: The **ASN** reserves the right to amend these details to reflect any change occurring in the quality of fuel on general sale to the public in the UK.

Also refer to Specifications Table below.

Petrol: **Commercially available gasoline**

a. **BS EN 228 (unleaded and super-unleaded**).

Unless otherwise stated or the distinction is made between leaded and unleaded petrol, the motor gasoline fuel shall meet the following:

i. Acceptance levels for **Octane Numbers** will be accepted or rejected according to the Standard ASTM D.3244.

ii. Only additives to this **Motor Gasoline Fuel** solely for the purpose of lead replacement are allowed.

LRG (unleaded), Lead replacement gasoline (LRG also known as LRP): Only additives to unleaded motor gasoline, solely for the purpose of lead replacement, from Sodium, Phosphorous or Manganese are allowed, subject to application according to manufacturer's instructions and to the treated fuel complying with the **Specifications Table** at **Art.1.8 of this Chapter.**

Lead in excess of EU Directive 98/70 EC requirements is illegal. This also applies to 'Free Fuel'.

The addition of a lubricant on current sale is permitted in fuels for use in 2-stroke engines.

For rotary engines, a 2-stroke oil with a minimum viscosity of 5 cSt at 100°C, may be added at a maximum concentration of 0.30% (mixing ratio of 300:1).

b. **Petrol** or **Diesel** in compliance with **FIA** Appendix J Art 266. Or, for Karting, Petrol in accordance with **CIK Technical Regulations** Appendix 6. Article 6.1.

c. **LPG (Liquefied Petroleum Gas)** which is of 99% wt. min. hydrocarbon composition and that is entirely gaseous at atmospheric temperature and pressure. Complying with BS EN589.

d. **Diesel Automotive Gas Oil (DERV**), commercially available, complying with BS EN 590 and EU Directive 98/70 EC (see Table below).

e. **High Ethanol Content Fuel** in compliance with **FIA** Appendix J Art 266 Article 9.3 – Only permitted to be used with the specific approval of the **ASN**.

f. **Bio Diesel** – Commercially available and complying with BS EN15940

g. **Methanol.** Methyl Alcohol CH3OH. This is a clear colourless liquid, miscible with water acetone and other ketones, the esters, aromatic and highly unsaturates hydrocarbons, and castor oil. It is not miscible in all proportions with straight-run petroleum spirit or mineral oil. B.P. 64.7°C, Specific Gravity 0.796, Flash Point 32°F. For **Speed Events**, British Standard 506 with an allowance of up to 10% Acetone, is permitted. It must include an **ASN** approved additive which provides a distinguishable colour and smell when burning. The maximum permitted volume of additive within the fuel is 0.2%.

h. **Hydrogen** in compliance with **FIA** Appendix J Art 266 Article 9 – Only permitted to be used with the specific approval of the **ASN**.

1.8. **SPECIFICATIONS TABLE**

PERMITTED FUEL - UNLEADED, SUPER-UNLEADED AND LRG

	BS EN 228 (Unleaded)	**Test**
MON (max)	89.0	EN ISO 5163
RON (max)	100.0	EN ISO 5164
Oxygen % (max)	3.7% w/w	Elemental
	LRG (Unleaded)	**Test**
MON (max)	89.0	EN ISO 5163
RON (max)	100.0	EN ISO 5164
Lead (max) g/l	0.005	ASTM D3341/IP362/EN 237
Oxygen % (max)	2.7% w/w	Elemental

Certain of the above values are additional to those specified in the standards referred to.

PERMITTED FUEL – DIESEL

	BS EN 590	**Test**
Density 15˚C kg/m^3 (max)	**845**	**EN ISO 3675/EN ISO 12185**
Cetane Number (max)	**60**	**EN ISO 5165/EN 15195**
Calculated Cetane Index (max)	**60**	**EN ISO 4264**
Sulphur Content mg/kg (max)	**10**	**EN ISO 20846/EN ISO 20884**

At the discretion of the **ASN** the maximum Cetane and calculated Cetane numbers may be increased to 70.0 for **National Competitions / Championships**

CHAPTER 8 PERMITTED TYRES AND FUEL AND TESTING

Appendix 2 - Fuel (and other Vehicle fluids) Testing

1. Fuel (and other Vehicle Fluids) Testing

1.1. **Organiser**s and the **ASN** have the right at any time before, during or after a **Permitted Event** to check and or require the testing of any fuel used or presented by the **Competitor** for use in **Competition**. This includes fuels in a **Vehicle** at any time during or for the purpose of the **Competition** including any scrutineering of it connected to the relevant **Competition** and to any fuel present in the **Competitor**'s pit or paddock area.

1.2. The **Clerk of the Course** must always be notified of the intention to carry out fuel checking and or testing.

1.3. The responsibility for the checking of fuels at **Event**s is an **Eligibility** matter and shall be delegated to the **Chief Scrutineer** at the **Event** who in turn may delegate this responsibility to other **Scrutineers** appointed to the **Event** but who shall report to the **Chief Scrutineer.**

1.4. Any non-conformity of any fuel shall be reported by a **Non-Compliance Report** and which must be delivered to the **Clerk of the Course** or to the **Stewards of the Event** where the **Clerk** has no **Judicial** responsibility at an **Event**.

1.5. A **Non-Compliance Report** may be a **Judgement of Fact** provided that the **Scrutineers** concerned satisfy the criteria as **Judges of Fact.**

1.6. On receipt of a **Non-Compliance Report** the relevant **Judicial** body must deal with the matter by way of a formal **Judicial Hearing** pursuant to **Ch.2. App.8 Arts.1.9-1.12**.The result of the **Judicial Hearing** shall be published as an **Official Document** of the **Event**.

1.7. Fuels may be checked for eligibility under the **Official Documents** or for testing as set out below ('FTP')

1.8. The analysis of a laboratory on the UKAS list or by an **ASN** approved comparison test will be a Judgement of Fact.

1.9. Any **Eligibility Decision** whereby it is determined that any fuel is in breach of the **NCR** shall be penalised in accordance with **Ch.2 App.8 Art.2** (subject always to **Ch.2 App. 8 Art.1.12** (a ruling in respect of exceptional reason). The **ASN** may additionally refer the matter to the **National Court** for the consideration of additional penalties.

2. FTP

2.1. New unused **ASN** approved sample containers, capable of being sealed by the authorised sampling official must always be used for the storage of fuel samples.

2.2. Three samples will be taken and must individually be sealed and labelled in separate **ASN** approved containers as per **Art.2.1 above.** An **ASN Sealing Certificate** must be completed and distributed as detailed on the **Certificate.** For **Comparison Testing** only one sample need be taken, providing the **Vehicle** remains secured in **Parc Ferme** to enable subsequent samples to be taken should this first sample confirm non-compliance.

3. Analysis Testing

3.1. Each sample must be a minimum of 1 litre.

3.2. Where there are less than 3 litres available, such that only two minimum 1 litre samples are available the **Competitor** forfeits their right to select a sample (**Art.3.6 below**) and the result of the **ASN** first test will conclusively determine the compliance or non-compliance of the fuel (**Art.3.5 below**).

3.3. If only a single minimum 1 litre sample is available, that sample alone will be tested in accordance with **Art. 3.7 below** and that test will conclusively determine the compliance or non-compliance of the fuel. Notification will be given under **Art.6.1 below.**

3.4. The results of all analysis testing will be compared for compliance with the relevant specification, detailed in this **Ch.8 App.1: Permitted Fuel**, in accordance to the reproducibility of the test method.

3.5. Subject to Arts.3.2 and 3.3 above the **Entrant** is entitled to select one of the samples for their retention (the "**Entrant's Sample**") and to nominate a testing laboratory on the list of the United Kingdom Accreditation Service (UKAS) for the independent testing of that sample, if required as per Art.3.9 below.

3.6. The remaining samples must be delivered by the **Organiser**s to the **ASN**, normally within 7 days of the **Event**.

3.7. The **ASN** will then select one of these two samples at random and arrange testing of the selected sample at a laboratory on the UKAS list. The breaking of the seal must be witnessed by an appointed representative of the **ASN**.

3.8. The result of this **ASN** first test will be notified pursuant to Art6.1 below.

3.9. If the result of this **ASN** first test indicates non-compliance then the **Entrant** may, within 14 days of being notified of this non-compliance (Art6.1 below), submit the **Entrant**'s Sample for testing at the laboratory nominated by them (Art.3.5 above) and at their expense (Art.7.2 below). The **Entrant** must be given the opportunity to be present at this test and the test – including the breaking of the seal(s) – must be witnessed by an appointed representative of the **ASN**.

3.10. If the **Entrant** does not submit the **Entrant's Sample** for testing within the said 14 days or if the result of their test confirms non-compliance then the fuel will be deemed ineligible and notification will be given under Art6.1 below.

3.11. If the result of the **Entrant**'s test indicates compliance), then the **ASN** will arrange for the remaining third sample to be tested by a laboratory on the UKAS list not previously used in this particular testing process. The **Entrant** must be given the opportunity to be present at this test and the test – including the breaking of the seal(s) – must be witnessed by an appointed representative of the **ASN**.

3.12. Where testing takes place under Art.3.11 above then the result of this third test will conclusively determine the compliance or non-compliance of the fuel and notification will be given under Art6.1 below.

4. Comparison Testing

4.1. Each sample must be a minimum of 50ml.

4.2. The results of all comparison testing will be compared for compliance with the results obtained from a sample taken from the same controlled source, at the beginning of the **Event**.

4.3. Comparison testing will only be implemented where fuel for the **Event** is mandated by the **Organisers** for all **Competitors** in the **Class(es)** to be drawn from a single controlled source. It is the sole method used when use of control fuel is mandatory.

4.4. One sample, selected at random, will normally be tested on-site in accordance with **ASN** approved procedures, by the authority nominated in those procedures.

4.5. If the result of this test indicates compliance then no further action will be taken.

4.6. If the result of this test confirms non-compliance then the **Entrant** will be informed and will be given the opportunity to select one of the two remaining sealed samples (Art.2.2 above) for testing in their presence and in accordance with the same **ASN** approved procedures (Art.4.4 above).

4.7. If the **Entrant** chooses not to have a sample tested, or if the result of this second test confirms non-compliance, then the fuel will be deemed ineligible and notification given under Art.35 below.

4.8. If the result of this second test indicates compliance then the remaining third sample will be tested in accordance with the same **ASN** approved procedures (Art.4.4 above); the **Entrant** must be given the opportunity to be present at this test.

4.9. Where testing takes place under Art.4.8 above then the result of this third test alone will conclusively determine the eligibility of the fuel and notification will be given under Art6.1 below.

5. Storage of Samples

5.1. Samples retained by the **ASN** or its authorised **Officials** must be stored in a secure location.

5.2. If there is any evidence that any seal and / or container has been tampered with, then that sample will be deemed to have failed the relevant test.

6. Notification of Results

6.1. The result of either Analysis or Comparison fuel testing will be reported to the **Entrant**, the **ASN** or its authorised official and must be communicated to the **Clerk of the Course, Technical Commissioner(s), Chief Scrutineer** and **Eligibility Scrutineer** prior to the relevant **Judicial Official** proceeding in accordance with **Arts.1.6** and **1.9 above**.

7. Cost of Testing

7.1. Unless fuel testing is specifically authorised by the **ASN**, the cost of testing shall be initially borne by the **Club,** organisation or individual requesting the test. However, whenever the conclusion of the testing procedure confirms non-compliance, then the **Entrant** shall be ultimately responsible for all costs and fees arising from the testing procedure.

7.2. Where the **Entrant** chooses to submit a selected sample for testing at a laboratory of their own choice (**Art.3.9 above**) then they will be responsible for all charges relating to that testing.

8. The Testing of Vehicle Fluids other than fuel

8.1. Three samples, each of equal volume, will be taken at the **Event** / **Competition Venue** and must be labelled and sealed. One sample will be tested by an **ASN** approved official using approved test equipment in accordance with **ASN** approved procedures.

8.2. The principles applied to the testing of fuel samples in this Appendix must be followed as appropriate for the testing of such other **Vehicle** fluids.

CHAPTER 8 PERMITTED TYRES AND FUELS AND TESTING

Appendix 3 - Tyre Testing and Checking

1. General

1.1. **Organisers** have the right at any time during or after a **Permitted Event** to check and or require the testing of any tyre presented by the **Competitor** for use in **Competition.** This includes tyres presented on a **Vehicle** at any **Scrutineer**ing of it connected to the relevant **Competition** and to any tyre designated by the **Competitor** as a 'spare' including any 'wet use' tyre.

1.2. The **Clerk of the Course** must always be notified of the intention to carry out tyre checking and or testing.

1.3. The responsibility for the checking of tyres at **Events** is an **Eligibility** matter and shall be delegated to the **Chief Scrutineer** at the **Event** who in turn may delegate this responsibility to other **Scrutineers** appointed to the **Event** but who shall report to the **Chief Scrutineer**.

1.4. Any non-conformity of any tyre shall be reported by a **Non Compliance Report** and which must be delivered to the **Clerk of the Course** or to the **Stewards of the Event** where the **Clerk** has no **Judicial** responsibility at an **Event**.

1.5. A **Non Compliance Report** may be a **Judgement of Fact** provided that the **Scrutineers** concerned satisfy the criteria as **Judges of Fact.**

1.6. On receipt of a **Non Compliance Report** the relevant **Judicial** body must deal with the matter by way of a formal **Judicial Hearing** pursuant to **Ch.2. App.8 Arts.1.9–1.12**. The result of the **Judicial Hearing** shall be published as an **Official Document** of the **Event**.

1.7. Tyres may be checked for **Eligibility** under the **Official Documents** or for testing in relation to performance enhancing products ('**TTP**') as set out below.

1.8. The analysis of a laboratory on the UKAS list or by an **ASN** approved comparison test will be a **Judgement of Fact.**

1.9. Any **Eligibility Decision** whereby it is determined that any tyre is in breach of the **NCR** shall be penalised in accordance with **Ch.2 App.8 Art.2** (subject always to **Ch.2 App.8 Art.1.12** (a ruling in respect of exceptional reason)). The **ASN** may additionally refer the matter to the **National Court** for the consideration of additional penalties.

2. TTP

2.1. **TTP** may be carried out at any time, before, during, or after a **Competition** on the instructions of the **ASN**, **Clerk of the Course**, **Technical Commissioner, Chief Scrutineer**, **Eligibility Scrutineer** or the **Stewards**.

2.2. New unused **ASN** approved sample containers, or other containers approved by the **ASN**, capable of being sealed by the authorised sampling official must always be used for the storage of individual tyre rubber samples.

2.3. Where there is the possibility that the tyre(s) may have "picked up" rubber from the track surface, the **Entrant** shall be permitted (or may be required by the Eligibility or **Chief Scrutineer**) to remove the "pick up" from the tyre(s) with a mechanical device, such as a scraper. Rubber residue from the cleaning process must be collected and retained by the **Chief Scrutineer** for further testing as appropriate, and in a separate container as per **Art.1.2 above.**

2.4. Removal of rubber samples from the tyre must be done in a controlled and preferably clean environment within the Venue, such as in the scrutineering bay, and always under the supervision of the **Chief Scrutineer** or **Eligibility Scrutineer**. Removal onto a clean surface is essential. The tyre rubber sample(s) will then be subjected to testing in the approved manner as detailed below. The **Competitor** (or in the case of minors, the **Competitor** and **PG**) shall have the right to be present.

2.5. Three samples will be taken and must be sealed and labelled in separate **ASN** approved containers as per **Art.1.2 above** and an **ASN Sealing Certificate** must be completed and distributed as detailed on the **Certificate.** Prior to sealing, the samples should be wrapped in clean aluminium foil to prevent contact with any plastics.

2.6. Each sample must be a minimum of 1mm width, 25mm length and 0.3mm depth.

2.7. Each sample shall be placed and sealed in an **ASN** tamper-proof evidence bag.

3. Analysis Testing

3.1. The results of all analysis testing will be compared for compliance with the relevant tyre manufacturer's specification for that model retained by the **ASN**.

3.2. The **Entrant** is entitled to select one of the samples for their retention (the "**Entrant's Sample**") and to nominate a testing laboratory on the list of the United Kingdom Accreditation Service (UKAS) for the independent testing of that sample, if required as per **Art.2.6 above**.

3.3. The remaining two samples must be delivered by the organisers to the **ASN**, normally within 7 days of the **Event**.

3.4. The **ASN** will then select one of these two samples at random and arrange testing of the selected sample at a laboratory on the UKAS list, or a laboratory approved by another **ASN**. The breaking of the seal must be witnessed by a representative of the **ASN**.

3.5. The result of this **ASN** first test will be notified pursuant to **Art.5 below**.

3.6. If the result of this **ASN** first test confirms noncompliance then the **Entrant** may, within 14 days of being notified of this non-compliance, submit the **Entrant's Sample** for testing at the laboratory nominated by them (**Art.1.8 above**) and at their expense (**Art.7.1 below**). The **Entrant** must be given the opportunity to be present at this test and the test, including the breaking of the seal(s), must be witnessed by a representative of the **ASN**.

3.7. If the **Entrant** does not submit the **Entrant's Sample** for testing within the said 14 days, or if the result of their test confirms non-compliance), the tyre(s) will be deemed ineligible and notification will be given under **Art.5 below**.

3.8. If the result of the **Entrant's** test confirms compliance, then the **ASN** will arrange for the remaining third sample to be tested by a laboratory on the UKAS list not previously used in this particular testing process. The **Entrant** must be given the opportunity to be present at this test and the test, including the breaking of the seal(s), must be witnessed by a representative of the **ASN**.

3.9. Where testing takes place under **Art.4.1 below**, the result of this third test will conclusively determine the compliance or non-compliance of the tyre(s). Notification will be given in accordance with **Art.5**.

4. Comparison Testing

4.1. The results of all comparison testing will be compared for compliance with the results obtained from a sample taken from the same manufacturer and model of tyre, from the same controlled source, at the beginning of the **Event**.

4.2. Comparison testing will only be implemented where tyres for the **Event** are mandated by the **Organisers** for all **Competitors** in the class(es) to be drawn from a single controlled source.

4.3. One sample, selected at random, will normally be tested on-site by an **ASN** approved official and in accordance with **ASN** approved procedures.

4.4. If the result of this test confirms compliance then no further action will be taken.

4.5. If the result of this test confirms non-compliance, the **Entrant** will be informed and will be given the opportunity to select one of the two remaining sealed samples for testing in their presence.

4.6. If the **Entrant** chooses not to have a sample tested, or if the result of this second confirms non compliance then the tyres will be deemed ineligible and notification given under **Art.5 below**.

4.7. If the result of this second test confirms compliance, then the remaining third sample will be tested; the **Entrant** must be given the opportunity to be present at this test.

4.8. Where testing takes place under **Art.3.7 above** the result of this third test alone will conclusively determine the eligibility of the tyre(s) and notification will be given under **Art.5 below**.

5. Storage of Samples

5.1. Samples retained by the **ASN** or its authorised Officials must be stored in a secure location.

5.2. If there is any evidence that any seal and/or container has been tampered with, then that sample will be deemed to be invalid.

6. Notification of Results

6.1. The result of either Analysis or Comparison tyre testing will be reported to the **ASN** or its authorised official and must be communicated to the **Entrant, Clerk of the Course**, **Technical Commissioner(s), Chief Scrutineer** and **Eligibility Scrutineer** prior to the relevant **Judicial Official** proceeding in accordance with **Arts.1.6** and **1.9 above**.

7. Cost of Testing

7.1. Unless TTP is specifically authorised by the **ASN** the cost of testing shall be initially borne by the **Club,** organisation or individual requesting the test. However, whenever the conclusion of the testing procedure confirms non-compliance, then the **Entrant** shall be ultimately responsible for all costs and fees arising from the testing procedure.

7.2. The analysis of a laboratory on the UKAS list (or a laboratory approved by another **ASN** in respect of **Art.2.4** above) or by an **ASN** approved comparison test, will be taken as a finding of fact.

8. Tyre Checking (Karting)

8.1. It shall be an offence to use a tyre which does not comply with the tyre specification laid down in the **Technical Regulations**, or the **Official Documents** of the **Event** (or **Championship**).

8.2. The analysis of a laboratory on the UKAS list (or a laboratory approved by another **ASN** in respect of U20.3.4.) or by an **ASN** approved comparison test, will be taken as a finding of fact.

8.3. The provisions of **Ch.2 App.8** will apply in the case of a tyre or tyres found to be ineligible and additional penalties may be applied by the **ASN** and/or the **ASN National Court**.

CHAPTER 8 PERMITTED FUEL AND TYRES AND TESTING

Appendix 4 - Permitted Tyre Lists

Certain **Championships** define the types of tyre permitted to be used and **Competitors** it is the **Competitor**'s responsibility to check the requirements in all **Event** and **Official Documents** which will specify the **Permitted Tyres.**

1. Production Tyres

1.1. The tyres in List 1A are regarded by the manufacturers as **Standard Road Tyres**. They may have wear bars moulded into the tread to show 1.6mm remaining pattern depth. These are set at six positions around the circumference of the tyre and extend across its width. If any of the wear bars are level with the tread surface at pre-**Event** scrutineering the **Vehicle** will not be allowed to compete.

1.2. Tyres with sidewall markings removed will be prohibited in all **Events** unless they are correctly marked 'Retread' or 'Remould'.

1.3. All tyres on List 1A and 1B must carry type approval markings ('E' mark) in compliance with ECE Reg 30 and Reg 117. ECE Reg 108 for retread tyres. Or ECE Reg 30 for tyres designed for use on cars first registered before 1st October 1990.

1.4. Tyre List 1C is solely for **Competition Tyres** with type approval markings ('E' mark) in compliance with EEC Reg 30 or Reg 108 but no longer in compliance with Reg 117.

1.5. Some tyres in List 1A and 1B may have additional sidewall markings denoting specific fitment at OE These markings may be in the vicinity of the range name or after the size designation (eg NO, MO,*). Such tyres with additional markings are accepted as equivalent to tyres designated in Lists 1A and 1B.

1.6. Tyres marked with an asterisk may be removed from the **Lists** at the end of the current year. See official bulletins for details. Additional tyres may be added to the lists at any time (see official bulletins for details).

1.7. Run-flat, SUV and EV variants of tyres listed in List 1A are permitted unless specifically prohibited in the Lists. Tyre pressure monitoring devices must be used on run-flat tyres.

1.8. Tyres must be suitably rated for the vehicle on which they are being used.

2. Tyres for All Rallies

2.1. For **Rallies**, all tyres used on the **Public Highway** must comply with the relevant **Motor Vehicle Construction and Use Regulations**, in addition to requirements specified in Ch.13 App.15 Art.4 (**Road Rallies**), Ch.13 App.15 Art.13 (**Historic Road Rallies**), Ch.13 App.15 Art.7.15 (**Endurance Road Rallies**), Ch.13 App.16 Art.7 (**Stage Rallies**) and Ch.13 App.17 Art.7 (**Historic Stage Rallies**), and the following regulations.

2.2. At all times during an **Event** the tread depth must not be less than 1.6mm over at least three quarters of the tread pattern.

2.3. Tyres marked 'For Racing Purposes Only' are prohibited on all **Rallies.**

3. Tyres for Road Rallies

3.1. For all **Road, Navigation, Targa Road** and **Historic Road Rallies** tyres are free subject to the following:

a. Tyres on the current **FIA List of Asphalt Eligible Tyres** including sizes not homologated are not permitted unless on List R;

b. Tyres on List 1B and List 1C are not permitted other than those on List R;

c. Tyres marked for "**Competition** use" are not permitted with the exception of tyres on **List 6** and **List R**.

3.2. For **Endurance Road Rallies** only tyres on List 4 are permitted.

YOKOHAMA

ADVAN

YOKOHAMA.CO.UK

YOKOHAMA

4. Tyres for Stage Rallies

4.1. **FIA** homologated tyres are recommended for asphalt stage rallies. All tyres contained in List 1A,, 1B and 6 are authorised for use on all sealed surface **Stage Rallies.**

4.2. Only tyres from List 6 are authorised for use on unsealed surface stages taking place on the national forest estates (FCS/FCE/NRW).

4.3. Additionally, for **Single Venue Stage Rallies**, where no part of the itinerary traverses the **Public Highway,** tyres from **List 1C** are authorised.

4.4. **NOTE TO COMPETITORS:** road legal List 1A tyres and some specialist motor sport tyres may not have strengthened sidewalls more normally used in the construction of tyres in List 1B and Rally tyres homologated by the **FIA.**

4.5. With the exception of tyres specified in List 1A, 1B (1C SVSRs where permitted) and 6, hand cutting is permitted, but only for the purpose of introducing additional grooves no deeper than those moulded into a new tyre. Hand cutting in order to increase the depth of existing moulded grooves is prohibited for all tyres.

LIST 1A

Standard Road Tyres Suitable for Competition in compliance with Art.1.3.

4.6. It is prohibited to re-groove tyres in this list.

BLOCKLEY

- BR1 (pre 1/10/90)

BRIDGESTONE

- *Potenza RE050, RE050A
- *Potenza RE070R
- *Potenza S007
- *Potenza S001
- *Potenza S005
- *Potenza Sport
- *(1)Potenza Race

(1) Only applicable where an OE fitting. Contact **ASN** Technical for verification.

CONTINENTAL

- ContiEcoContact 3
- ContiEcoContact 5
- ContiPremiumContact 2
- ContiPremiumContact 5
- ContiSportContact 2
- ContiSportContact 3
- ContiSportContact 5
- ContiSportContact 5P
- EcoContact 6
- EcoContact 7
- EcoContact 7S
- PremiumContact 6
- PremiumContact 7
- SportContact 6
- SportContact 7
- UltraContact
- UltraContact NXT

DAVANTI

- Protoura Sport

DUNLOP

- SP Sport 01
- SP Sport 600
- SP Sport Aquajet/CB73
- SP Sport Maxx GT
- SP Sport Maxx RT
- SP Sport Blue Response
- SP Sport Maxx RT2
- SP Street Response 2
- SP Sport Maxx
- SP Sport FastResponse

FIRESTONE

- *Firehawk Sport

DAVANTI TYRES

ENGINEERED TO WIN

ENGINEERED TO WIN
ENGINEERED TO WIN
ENGINEERED TO WIN

Scan for more

PROTOURA RACE

MOTORSPORT UK LIST 1B

Protoura Race from Davanti has been specifically designed to excel on the track.

Its semi-slick tread design provides a combination of excellent dry grip and control in the wet without compromising speed, making it a successful formula to outpace the ordinary.

Follow Us

Discover more at **davanti-tyres.com**

GITI

- *Sport S1
- Sport S2
- GitiSynergy E1

GOODYEAR

- Eagle F1 Asymmetric 2
- Eagle F1 Asymmetric 3
- Efficient Grip Performance
- Eagle F1 SuperSport
- Eagle F1 SuperSport R
- Eagle F1 SuperSport RS
- Efficient Grip Compact
- Efficient Grip Performance 2
- Eagle F1 Asymmetric 5
- Eagle F1 Asymmetric 6

GT RADIAL

- *Sport Active
- Sport Active 2
- FE2

HANKOOK

- Kinergy Eco2
- Ventus Prime 3
- Ventus Prime 4
- Ventus S1 Evo3
- (1)Ventus S1 EvoZ
- Ventus Evo

(1) Only applicable where an OE fitting. Contact **ASN** Technical for verification.

KUMHO

- Ecsta PS91
- Ecsta HS52
- Ecsta PS71
- Ecsta Sport (PS72)
- Ecsta Sport S (PS72)

MICHELIN

- Pilot Sport

(Excludes Pilot Sport Cup and all **Competition** tyres)

- Pilot Sport 3
- (1) Pilot Sport Cup 2R
- (1) Pilot Sport Cup 2
- Pilot Sport 4 (including PS4S)
- Pilot Sport 5
- Pilot Sport PS2
- Pilot Exalto PE2

(1) Only applicable where an OE fitting. Contact **ASN** Technical for verification.

NANKANG

- *NS–20
- AS–1
- XR–611
- *AS–2+
- NA-1
- ECO–2+
- AS–3

PIRELLI

- P Zero
- *Cinturato P7
- *CA67
- CN12
- P7
- P Zero Nero GT
- P1 Cinturato

TOYO

- Proxes T1-R
- Proxes T1 Sport
- 330
- 310
- NanoEnergy 3
- Proxes CF2
- Proxes Sport
- Proxes TR1
- Proxes Sport 2
- Proxes Comfort

UNIROYAL

- RainSport 3
- RainExpert 3
- RainSport 5
- RainExpert 5

YOKOHAMA

- A 008 (Advan HF Type D)
- A 539
- Advan Sport V103
- Advan Sport V105
- Advan Fleva V701
- A 008 P
- GT Special Classic Y350 (pre 1/10/90)
- Advan Sport V107

LIST 1B

Road Tyres designed primarily for motor sport use in compliance with Art.1.3.

4.7. Some tyres below are available in sizes and tread compounds that do not comply with Reg 117. Only those tyres below in compliance with both Reg 30 and Reg 117 (unless exempt) are valid.

4.8. EU Regulation 1222/2009 for tyre labelling exempts tyres designed for use on **Vehicles** first registered before the 1st October 1990, therefore a number of tyres remaining on List 1B will only be valid for **Vehicles** registered before this date, those tyres are appropriately annotated below.

4.9. It is prohibited to re-groove tyres in this list.

ACCELERA

- 651 Sport (including XTRA)
- 351 Sport GD

ARMSTRONG

- BLU-TRAC RACE

AVON

- ACB 10 Sport (pre 1/10/90)
- CR6ZZ (Including Sport) (pre 1/10/90)
- Turbospeed CR28 Sport (pre 1/10/90)
- *ZZS
- *ZZR (8018 & 8019

)

BRIDGESTONE

- *Potenza Race

COOPER

- *RS3–RS
- *Rally Classic CT01 (pre 1/10/90)

DAVANTI

- Protoura Race

EXTREME

- *VR1 (Marked either V2, S3, S4B) (retread)
- *VR2 (including NK) (Marked either R7a, R9a, S3, HL, R7B, R9B) (retread)

GITI

- Sport GTR3

HANKOOK

- Ventus TD

LANDSAIL

- Apex King AK01

MAXSPORT

- *RB5 (Marked either Hard, Medium) (retread)
- *RB6 (Marked either Hard, Medium) (retread)

MICHELIN

- Pilot Sport Cup 2R

MRF

- ZTR (Marked Roadtrack)

Longstone CLASSIC TYRES

www.longstone.com Tel:+44(0)1302711123

NANKANG

- NS–2R
- AR–1
- CR–S
- CVR–6 (pre 1/10/90)

NOVA MOTORSPORT

- CT01 (pre 1/10/90)

OTANI

- BM2000

PIRELLI

- *CA67
- P Zero Corsa
- P7 Corsa Classic (Pre 1/10/1990 only)
- P Zero R
- P Zero Trofeo RS
- P Zero Trofeo R
- CN36

SENTURY

- AK01

TOYO

- Proxes R888R

VITOUR

- Tempesta P1

YOKOHAMA

- A032 – R (165/70x10 only)
- *A048 – LTS (OE fitments marked LTS in sizes 195/50x16 & 225/45x17 only)
- *Advan Neova AD08R
- Advan A052
- Advan Neova AD09
- Advan Neova AD08RS (Marked S2WR2)

ZESTINO

- Gredge 07R
- Gredge 07RS

LIST 1C

Competition Tyres in compliance with Art.1.4.

4.10. Tyres listed on 1B as valid for **Vehicles** first registered before 01/10/1990 are valid in 1C where fitted to **Vehicles** first registered after 01/10/1990.

4.11. It is prohibited to re-groove tyres in this list.

AVON

- *ZZR
- *ZZR RT7

COOPER

- RS 3-R

DUNLOP

- Direzza DII
- Direzza DZ03G
- Sport Maxx Race
- Direzza DIII

EXTREME

- VR1
(Marked either *W3A, *W5, W3b, W5B) (Retread)
- VR2
(Marked either *R5a, *W3A, R5B, W3B) (Retread)
- VRS
(Marked Type-N) (including NK) (Any Compound) (retread)

GITI

- Compete GTR 2

HANKOOK

- Ventus RS4

KUMHO

- Ecsta V700 (including V70A) (Any Compound)

MAXSPORT

- RB5 (Marked Soft) (retread)
- RB6 (Marked Soft) (retread)

MICHELIN

- TB15 (including +)
- TB5 (f & r) (including +)

MRF

- ZTR (Marked Trackday)

NOVA MOTORSPORT

- ZZS
- ZZR

YOKOHAMA

- *A021-R
- A048
- A050

LIST 2

4.12. **See NCR Chapter 17 (Trials) for details of Permitted tyres**

4.13. It is prohibited to re-groove tyres in this list.

LIST 3

4.14. **Tyres for Sporting Car Trials**

4.15. It is prohibited to re-groove tyres in this list.

MAXXIS

- *MA-510N
- *ME-3

MICHELIN

- XZX

NANKANG

- *CX668
- *NA-1

TOYO

- *330

VREDESTEIN

- T-Trac 2

YOKOHAMA

- GT Special Classic 350

LIST 4

Tyres for Endurance Road Rallies

4.16. It is prohibited to re-groove tyres in this list.

AVON

- Avanza
- CR6ZZ (not Sport or 6751)
- Ice Touring

COLWAY

- *Road Plus

FALCON

- PC523

FALKEN

- KK07E (10in)
- ZIEX-ZE912

FIRESTONE

- F580C
- *Multihawk Van
- *F580 (Incl. Fuel Saver)
- Vanhawk

Longstone CLASSIC TYRES

Photo:Doug, Cool Classics

Maserati A6G 2000 correctly sporting Pirelli's Stella Bianca on Borrani wheels

Developed through a racing history, the quality and beauty of Borrani light-weight wheels cannot be surpassed; Available for many marques including Alfa, Ferrari, Lancia, Maserati and many others. Contact us to find out how we can make the very best of your classic

Borrani. Wheels of glory

www.longstone.com Tel:+44(0)1302 711123

RUOTE BORRANI MILANO

PIRELLI

- 190 Snow Control

SPORTWAY

- R1
- R1+

VREDESTEIN

- Quatrac 2

LIST 5

Tyres for Cross Country Events

4.17. It is prohibited to re-groove tyres in this list.

4.18. **Competitive Safaris** and **Hill Rallies** and **Point to Point** must specify **Tyre Eligibility** in **Official Documents.** See **Ch.20 App.10 Art.7.2**

LIST 6

Tyres for unsealed surface Stage Rallies:

4.19. Other than as specified below only the tyres listed here are permitted for **Stage Rallies** in the **National Forest Estates.**

4.20. **Vehicles** using wheels of 12in diameter or less are exempt but the tyres may not be hand cut in any form.

4.21. **Cross Country Vehicles** with a valid **CCLB/Vehicle Passport** and for which a suitable fitting is not available may use tyres from **List 5**.

4.22. Where conditions dictate the **Clerk of the Course**, with the agreement of the **Steward**s of the **Event,** may declare the **Event** to be of "Winter Conditions" and suspend the requirement to comply with **Tyre List 6.**

4.23. It is prohibited to re-groove tyres in this list.

ACCELERA

- RA162

AVON

- SFR

DMACK

- *DMG+
- *DMG+2
- *DMG1
- *DMG2
- *DMG3
- *Surface Saver
- DMG+22

DUNLOP

- DZ86 R/RW
- DZ87R
- *SP61/82
- SP85
- Direzza 88R

FEDERAL

- *G10

FEDIMA

- F4
- F5

HANKOOK

- R201
- R202
- R203 NEW
- R203
- R204
- R211
- R213

HOOSIER

- GTS
- GTM
- GTH

KUMHO

- R800
- R900

MAXSPORT

- RB3 Narrow
- RB3 Ultra
- RB3

MAXXIS

- Victra R19

MICHELIN

- FB
- LATCROSS HR/HL
- TL40
- TL
- TZ
- TZS
- LTX Force T
- LTX Force T XL
- G70 / G80 / G90

MRF

- ZDM3
- ZG1
- ZG2
- ZGM
- ZVH1
- ZG3
- ZG4
- ZDM2

NOVA MOTORSPORT

- M+S (Incl. Avon and Cooper)
- M+S Evo (Incl. Avon and Cooper)
- DG1 (Incl. Cooper)

PIRELLI

- GM
- K
- KM
- *XR
- *Scorpion XR
- WRC Scorpion K**
- Scorpion AT
- T

YOKOHAMA

- A035
- A035E
- A036
- A053

LIST R

AVON

- CR6ZZ
- Turbospeed CR28 Sport (pre1/10/90)
- ZZS
- ZZR

COOPER

- Rally Classic CT01 (pre 1/10/90)
- DT1

DAVANTI

- Protoura Race

EXTREME

- VR1
- VRC

HANKOOK

- Ventus Z205
- Z210

HOOSIER

- TW1W/TW2W
- TD1W/TD2W
- TD1S/TD2S

KUMHO

- TM02
- TW02

MAXSPORT

- RB5
- RB6

MICHELIN

- Pilot Sport

MRF

- ZTA
- ZTR (Marked RoadTrack)
- ZWR
- ZTW5

NANKANG

- NS-2R
- CR-S
- AR-1 (12 inch only)
- CVR-6 (pre 1/10/90)

PIRELLI

- P7 Corsa Classic (pre 1/10/90)
- CN36

TOYO

- Proxes R888R

YOKOHAMA

- A032 - R (165/70x10 only)
- Advan Neova AD08R
- Advan A052
- Advan Neova AD09
- Advan Neova AD08RS

Chapter 9

Competitor Personal Safety Equipment

FOR ALL YOUR MOTORSPORT REQUIREMENTS

demon tweeks

WE'VE GOT YOU COVERED

RACEWEAR AND HELMETS

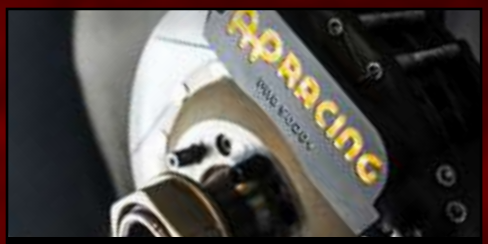

BRAKING

FIRE EXTINGUISHERS

STEERING WHEELS

INFORMATION SYSTEMS

KARTWEAR AND PROTECTION

SEATS AND HARNESSES

OILS AND FLUIDS

INTERCOMS

SIMULATOR EQUIPMENT

AIR FILTERS

LIGHTING

WHEELS AND TYRES

www.demon-tweeks.com

75 Ash Road South, Wrexham Ind. Estate,
Wrexham, North Wales, LL13 9UG

SALES ORDER LINE 01978 664466

SCAN ME TO VIEW OUR E-CATALOGUE

CHAPTER 9 COMPETITOR PERSONAL SAFETY EQUIPMENT

1. Illegal Copies Warning

1.1. **Competitors** are warned that despite the vigilance of the **ASN** and **FIA** and manufacturers there are a significant number of illegal copies of **Homologated** items offered for sale especially on the internet. These items are highly dangerous and do not conform to **Homologated** or other **Safety** standards.

1.2. **Competitors** should only source personal safety equipment from reputable suppliers who are authorised re-sellers for the manufacturer who has **Homologated** the equipment or manufactured it to an alternative recognised safety standard where permitted in **Competition** under the **Code** or the **NCR.** The **ASN** and / or **FIA** may demand proof of purchase.

1.3. Specific regulations concerning flame-resistant gloves, socks, balaclavas and underwear are published by the **FIA** and applicable to **International Events.**

1.4. **Personal Safety Equipment Homologation Lists** are freely accessible at **www.FIA.com**. If in doubt **Competitors** should contact the **ASN Technical Department** to arrange inspection or contact the **Chief Scrutineer** at an **Event** or if a **Competitor** in a **Championship** contact the **Championship Eligibility Scrutineer.**

1.5. **Competitors** are responsible for presenting and wearing at all times during **Competition** the correct legitimate **Personal Safety Equipment.**

1.6. The presentation and use at an **Event** of **Personal Safety Equipment** that does not conform to the acceptable standards and these **Regulations** is a punishable breach of the **NCR** (the maximum penalty is **Exclusion** from Motor Sport in all **FIA** territories and / or a fine to the maximum prescribed by these **NCR)** and **Scrutineers** are empowered to impound it.

1.7. Where illegal copies of **Personal Safety Equipment** are discovered at an **Event** it will be impounded by the **Scrutineers** and forwarded to the **ASN** who may forward to the **FIA** where applicable and to the manufacturer of the **Homologated / Standard** bearing equipment. It will be destroyed and the purchaser of it may risk criminal prosecution and / or a civil claim at the instance of the manufacturer.

2. Contamination

2.1. In all cases where contamination of the **Personal Safety Equipment** is suspected the advice of the **Chief Medical Officer** and / or **ASN Technical Department** must be obtained as part of the impound process. The item must only be handled wearing suitable protective clothing and following initial inspection be placed in a secure appropriately marked and sealed container.

3. General

3.1. As with any item of safety equipment evidence of damage or excessive wear can render it unsuitable for use. In the case of overalls and Heat and Flame-Resistant Clothing this could include over frequent or incorrect washing broken seams or stitching and worn patches.

3.2. Due to the complex nature of national test standards and variations of detailed testing it is not possible to quote ‘equivalents’ from foreign national standards unless they are **FIA** approved.

3.3. **National** test standards may be superseded by or collaborate with European norms (CE Marks) which may provide a common standard throughout Europe and may include the territories of the **ASN.** The **Competitor** must ensure that the correct equipment is used in the jurisdiction of the **Competition.**

3.4. Individual **Competitors** are responsible for ensuring their own safety and that appropriate flame-resistant overalls are worn when mandatory.

3.5. **Competitors** are strongly advised to wear flame-resistant gloves socks balaclavas and underwear.

3.6. Plastic or similarly combustible material in footwear is to be avoided during **Competition** due to risk of fire related injury.

3.7. When a name appears on a driver's helmet or overalls this must be the name of the person wearing them and must be in accordance with **Homologated** standards and / or manufacturer recommendations.

3.8. The **ASN** may depict and publish images of impounded **Personal Safety Equipment** without identifying the **Competitor** by name for the purposes of **Safety** education and / or training. By applying for and holding an **ASN Competition Licence** and **Entering** and **Signing On** at an **ASN Permitted Event** the **Competitor** acknowledges and accepts these rights of the **ASN** as necessary for the drive to improve **Safety** standards in global Motor Sport.

3.9. It is recognised by the **ASN** and this by all **Officials** and **Competitors** that **Personal Safety Equipment** may be impounded by National and local authorities.

4. Overalls

4.1. Clean Flame-Resistant overalls must be worn to cover from ankle to wrist to neck.

4.2. Exceptionally **Drivers** of open bodywork **Period Defined Vehicles (Non-Rally**) A-D and pre-1941 three wheeled cars, may wear **ACU** or **FIM** approved leather overalls which must have a minimum thickness of 1.2mm at any part of the suit, or overalls approved by the **FIA** for **Karting** on **Race Venues.**

4.3. Acceptable standards:

a. For **International** use overalls must comply with current **FIA** regulations.

b. For **FIA** Standard Overalls the homologation label will be stitched into the fabric of the garment or on a sewn in label.

c. Racing: **FIA** 8856-2018 / **FIA** 8856-2000

d. Special Stage Rallies / Sprints and Hill Climbs: **FIA** 8856-2018 / **FIA** 8856-2000 / **FIA** 1986 Standard

e. Karting: As defined in **Ch.18.**

f. All Other **Event**s (including overalls in accordance with **Ch.12**):

BS6249 part 1 Index A or B (but not part C).

BSEN533

EN533:1995 Index 3

ISO 14116

FIA 8856-2018

FIA 8856-2000

FIA 1986 Standard.

4.4. Two-piece overalls should be avoided but if worn must overlap and provide flame-resistant coverage.

5. Crash Helmets General

5.1. Crash helmets bearing an **ASN** approval sticker must be worn at all times during training Practice and **Competition**.

5.2. The user must ensure that the helmet is to a standard currently specified and that it fits properly and is secured properly and that it is in a serviceable condition.

5.3. It is strongly recommended that a flame-resistant balaclava helmet bib or face mask also be worn

5.4. Total protection can never be given by any headgear and the most advanced and or expensive crash helmets may not entirely prevent head injury or death in a severe accident.

GPR
RACE RALLY KART
PROTECTING TODAY'S DRIVERS
Official distributors of:
sparco OMP alpinestars BELL Arai HELMET stilo

Visit us today at **www.gprdirect.com** or visit our showroom
at Silverstone Technology Park, Silverstone, NN12 8TN **01327 855585**

5.5. Helmet users must understand that helmets are deliberately constructed so that the energy of a severe blow will be absorbed by the helmet and thereby partially destroy it. The damage may not be readily apparent; it is essential therefore that any helmet receiving a blow in an accident is either replaced or returned to the manufacturer for competent inspection – this of necessity must be the responsibility of the helmet user who will have been aware of the circumstances under which the helmet was struck.

5.6. It is not possible nor indeed reasonable to expect the **Scrutineer** in every case to observe significant damage.

5.7. Where there is any doubt about the helmet's fitness for its intended purpose then the **Chief Scrutineer** is empowered to remove the **ASN** Approval Sticker and impound the helmet for the duration of the **Event**.

5.8. **Competitor**s must proceed on the basis that once a helmet has served its purpose it is necessary to replace it. It is the **Competitor** who must ensure that the helmet used is fully fit for its purpose.

5.9. The **Competitor** should recognise that an accident may be survived but head injuries still result having knowingly used a previously damaged helmet and that insurance may be invalidated.

6. Impounding of helmets

6.1. The **ASN** may depict and publish images of the impounded helmet without identifying the **Competitor** by name for the purposed of safety education and / or training. By applying for and holding an **ASN Competition Licence** and Entering and Signing On at an **ASN** Permitted **Event** the **Competitor** acknowledges and accepts these rights of the **ASN** as necessary for the drive to improve safety standards in global motor sport.

Case 1 Pre-Event:

If the helmet does not conform with the required Standards or is in a poor or dangerous condition the **Chief Scrutineer** will impound the helmet for the duration of the **Event** and remove the **ASN** sticker. At the close of the **Event** the helmet may be returned as received (except for the **ASN** sticker) to the **Competitor** concerned alternatively the **Chief Scrutineer** may impound the item and forward it to the **ASN.**

Case 2 Accident during the **Event:**

If the **Competitor** is injured and the helmet is damaged the **Chief Scrutineer** will impound the helmet and remove the **ASN** sticker then forward it to the **ASN.**

Case 3 Accident during **Event** and **Competitor** evacuated to hospital with head injuries:

The **Chief Scrutineer** will produce the helmet to the **Chief Medical Officer** and then will then impound the helmet and remove the **ASN** sticker. Unless the **Chief Medical Officer** wishes to retain the helmet it must be securely delivered to the **ASN Technical Department.**

In all cases where contamination of the helmet is suspected the advice of the **Chief Medical Officer** and / or **ASN Technical Department** must be obtained as part of the impound process. The item must only be handled wearing suitable protective clothing and following initial inspection be placed in a secure appropriately marked and sealed container.

7. Standards:

7.1. Helmets bearing one of the under mentioned ‘standards’ may be approved by the **ASN** subject to other criteria being met. See also **Ch.7 App.13 Diagrams 7**, **8** and **9.**

a. ALL MOTORSPORT UK NATIONAL EVENTS

FIA 8860-2010

FIA 8859-2015

FIA 8860-2018

FIA 8860-2018-ABP

FIA 8859-2024

FIA 8859-2024-ABP

SNELL SA2015 (Not valid after 31.12.26)

SNELL SA2020

SNELL SA2025

b. **ASN National Kart Racing Events** (with exception of **Kart Drivers** under 15 years of age **Cadet** and **Bambino Drivers**) and **ASN National Junior Drag Racing**:

FIA 8878-2024

SNELL K2015

SNELL K2020

SNELL – **FIA** CMR2007

SNELL – **FIA** CMS2007

SNELL – **FIA** CMR2016

SNELL – **FIA** CMS2016

SNELL K2025

c. For all **International Events** please refer to the **FIA Regulations**.

d. **Kart Drivers** under 15 years of age Cadet and Bambino **Driver**s:

The weight of the helmet may be checked at any time during an event and must not weigh more than 1550g or such other value as may be specified from time to time by the **Code** and / or the **NCR:**

SNELL – **FIA** CMR2007

SNELL – **FIA** CMS2007

SNELL – **FIA** CMR2016

SNELL – **FIA** CMS2016

7.2. Part of the approval procedure is to affix an **ASN** sticker to the outside of the helmet in the approximate location of the driver's right ear.

7.3. Stickers may only be affixed by selected scrutineers or by **ASN Technical Officials** at **Motorsport UK** or by selected manufacturers after the helmet has been checked for conformity with the standard required and is considered to be in a satisfactory condition.

7.4. **ASN** approval stickers are subject to the current fee published by the **ASN** and payable by the **Competitor** to the approving **Scrutineer.** Approval stickers are printed on foil and once affixed cannot be reapplied. Stickers are individually numbered.

7.5. Helmets approved for use in all disciplines require a blue **ASN** sticker to be affixed. Helmets which are accepted for use in kart racing only require a green or yellow as applicable **ASN** sticker to be affixed. These stickers are available from issuing **Scrutineers** subject to the fee mentioned above.

7.6. Helmet standards are regularly reviewed and updated and superseded. Standards will periodically cease to be acceptable and an element of 'lifing' will always remain.

8. Fit and Security:

8.1. To ensure satisfactory fit and security of your helmet proceed as follows:

a. Obtain correct size by measuring the crown of your head.

b. Check that there is no side-to-side movement; a helmet should be as closely fitting as possible consistent with comfort.

c. Tighten straps securely – the chin strap must always be in tension; ensure therefore that the strap cannot slip. Chin cups are prohibited.

d. With head forward attempt to pull up the back of the helmet to ensure the helmet cannot be removed in this way.

e. Ensure you can see clearly over each shoulder.

f. Make sure nothing impedes your breathing in the helmet and never cover your nose or mouth other than with a flame-resistant balaclava or face mask.

g. Helmets with life-support must only be worn if connected to a permitted life-support system.

h. Never wear a scarf tie or other loose clothing which could come loose and possibly cause an accident.

i. Ensure that the visor can be opened with one gloved hand.

j. Satisfy yourself that the back of the helmet provides protection for your neck.

k. Do not buy from mail order unless you can satisfactorily carry out the above checks; return a helmet unused if it does not fit.

8.2. The **Competitor** is reminded of the following essential criteria when buying or using a helmet:

a. Correct Standard.

b. Correct Fit.

c. Security.

d. Condition.

9. Condition and Care of Helmet

9.1. The user must bear the prime responsibility for ensuring that the helmet is fit for the purpose intended since significant damage to the helmet may have been sustained without this being apparent to the **Scrutineer**.

9.2. Anything other than minor superficial damage is likely to result in the **Scrutineer** removing the **ASN** sticker and impounding the helmet for the **Event**.

9.3. It is in everyone's interest for the **Competitor** to buy the best helmet possible and to look after it (the best is not necessarily the most expensive). A helmet bag should always be used.

9.4. There must be no alteration to the structure of a helmet. Where a radio intercom is fitted this should only be done in accordance with the helmet manufacturer's instructions. Fitment of cameras to or within helmets by whatever means is not permitted unless an integral camera is provided by the helmet manufacturer and that model of helmet is approved under one of the accepted standards. Only glasses for the sole purpose of correcting eyesight in accordance with **Chapter 6 Appendix 2 Article 6.7** (and/or sun protection) are permitted.

9.5. Use only a weak solution of soft soap and water to clean the interior and exterior of the helmet; do not get the interior too wet.

9.6. Some moulded plastic helmets although they meet approved standards can be seriously damaged by substances such as petrol paint adhesives cleaning agents and stickers (not the **ASN** stickers) – such damage may not always be apparent; however crazing or obvious dulling of the surface finish could indicate

www.acscustom.com

acs

CELEBRATING 30 YEARS OF PROTECTING DRIVERS EARS!

From F1 to Karts, ACS are global specialists in Custom Hearing Protection and Communication Devices for motorsport drivers and teams.

SCAN TO VIEW PRODUCTS FOR MOTORSPORT

FOR ENQUIRIES, ORDERS AND FITTINGS EMAIL: SARAHR@ACSCUSTOM.COM

serious structural weakening of the helmet and is likely to result in the **Scrutineer** removing the **ASN** sticker and impounding the helmet for the **Event.**

10. FHR Device

10.1. It is permitted to incorporate the use of an **FIA** approved FHR Device fitted in accordance with **FIA** regulations and those below.

10.2. For **ASN National Events** in addition to helmets listed by the **FIA** as recognised for use with FHR helmets to Snell SA2015 and Snell SA2020 are accepted subject to the FHR anchorage points being marked as homologated to **FIA** 8858-2010.

10.3. Part of the approval procedure is to affix an **ASN** sticker to the yoke of the FHR device.

10.4. **ASN Stickers** may only be affixed by selected **Scrutineers** by **ASN Technical Officials** at **Motorsport UK** or by selected manufacturers after the FHR device has been checked for conformity with the standard required and is considered to be in a satisfactory condition.

10.5. **ASN Approval Stickers** for which a prescribed fee is payable are printed on foil and once affixed cannot be reapplied. Note: Stickers are individually numbered.

10.6. Where there is any doubt about the device's fitness for its intended purpose then the **Chief Scrutineer** is empowered to remove the **ASN Approval Sticker** and impound the FHR Device for the duration of the **Event**.

10.7. The FHR Device may also be impounded by the **Chief Scrutineer** on the same bases as the helmet including forwarding it to the **ASN**.

11. Goggles and Visors

11.1. Either a visor or goggles must be worn at all times during training **Practice** and **Competition** unless in a closed **Vehicle.**

11.2. Recommended visor and goggles standards (minimum) are:

11.3. BS4110 BS4110:1999 BS EN 1938 European Standard 89/686/EEC.

11.4. Such other standard as may be legislated from time to time.

11.5. Visors or goggles must be clear or neutral density filters.

12. Heat and Flame-Resistant Clothing

12.1. Where appropriate and required by specific regulations the **FIA** standard is shown below as detailed in **FIA Code Appendix L**. These standards are advised for all **Competition** use where protective clothing is either mandatory or recommended.

12.2. **Underclothing**. Materials tested to ISO 6940 or homologated to an **FIA** standard for protective clothing for automobile **Drivers.** An indication of this should appear on the front of the upper garment which must cover the neck.

12.3. **Balaclavas**. Materials tested to ISO 6940 or homologated to an **FIA** standard for protective clothing for automobile **Drivers**. For ISO 6940 garments all of the parts seen in frontal projection when worn must consist of at least 2 layers of minimum 180 gr/m^2 each. The bottom of the balaclava must meet the requirements in **Art.12.10 below**.

12.4. **Socks**. Materials tested to ISO 6940 or homologated to an **FIA** standard for protective clothing for automobile **Drivers**. Socks to be half hose (to mid-calf) and made from at least one layer minimum 180 gr/m^2.

12.5. **Shoes**. To cover the whole foot and ankle. Materials tested to ISO 6940 or homologated to an **FIA** standard for protective clothing for automobile **Drivers** and fastenings and laces to be of non- fusible material. Soles to be manufacturer certified as resistant to hydrocarbons and to flames. Thread used to be flame-resistant.

12.6. **Gloves**. Materials tests to ISO 6940 or homologated to an **FIA** standard for protective clothing for automobile **Drivers**. Each glove to be labelled to that effect. For ISO 6940 garments backs of gloves to be made from

at least two layers of 180 gr/m2. Thread must be flame-resistant and non-melting. Gloves must be fitted at the wearer's wrist and cover the cuff of the wearer's overalls.

12.7. Where **ASN** / **FIA** regulations specify the wearing of protective clothing the labels on overalls and upper underclothing may be verified by the **Organiser**s for compliance with regulations.

12.8. Exceptionally **Drivers** of **Period Defined Vehicles (Non Rally) A-D** and pre-1941 three wheeled **Vehicles** may wear **ACU** or **FIM** approved leather gloves and shoes which must have a minimum thickness of 1.2mm at any part of the garment or gloves and shoes approved by the **FIA** for **Karting** at **Race Venues.**

12.9. Wearers are warned of the particular vulnerability to fire of head neck wrists and ankles. Ankles and wrists should always be covered by at least two items of protective clothing

12.10. Balaclavas must extend to enter inside the overalls or undergarment around the neck and not come free whichever way the head is moved.

12.11. Upper undergarments should have a polo style neck

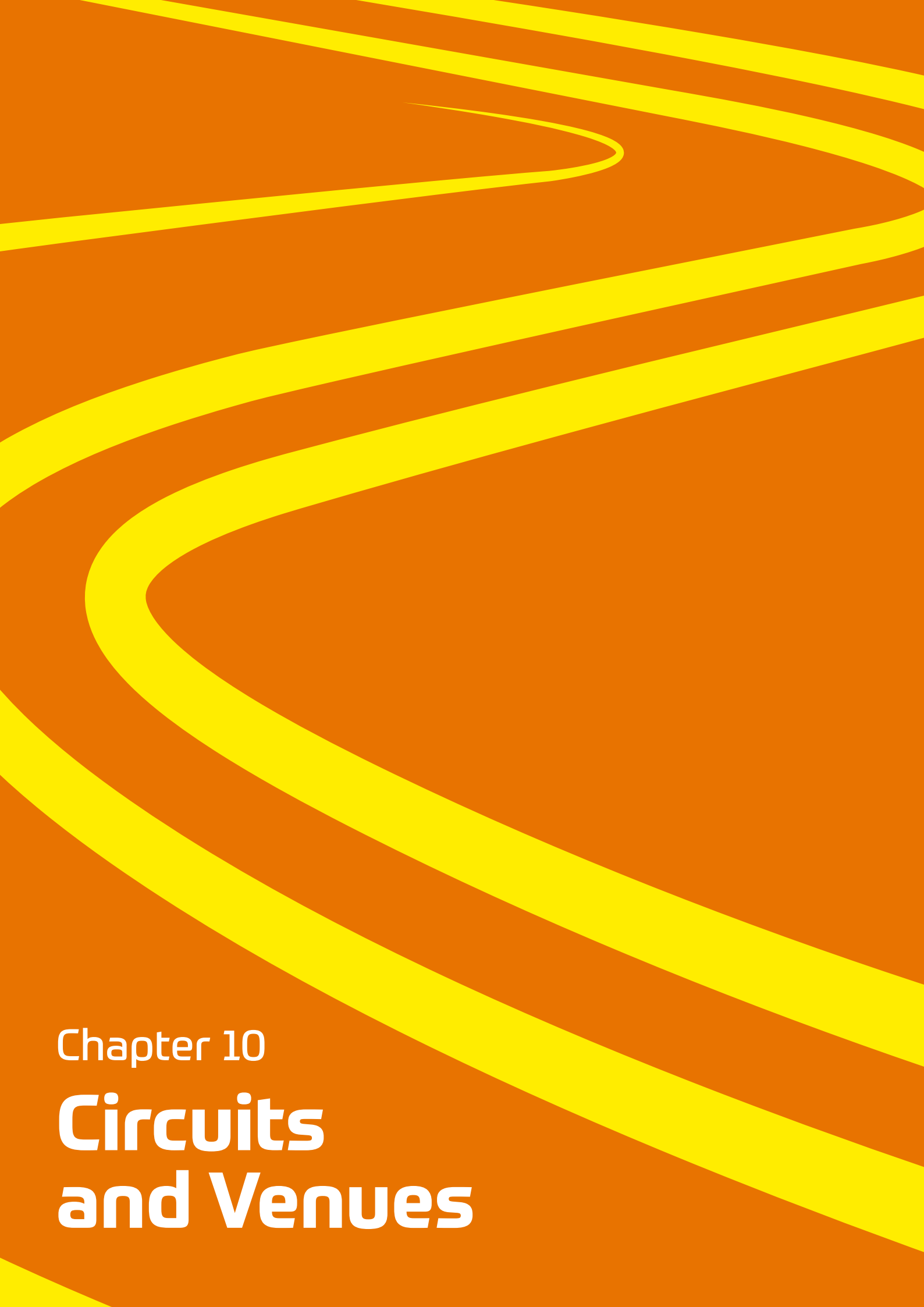

Chapter 10

Circuits and Venues

CHAPTER 10 - CIRCUITS AND VENUES

This Chapter is separated into the following appendices:

- App.1 **Regulations** for **Track Licences** and **Track Licence Applications**.
- App.2 Specific **Regulations** for **Race** and **Speed** and Temporary **Drag** Strip **Events**.
- App.3 Specific **Regulations** for Marshals Posts.
- App.4 Medical Facilities – Fire Precautions and Equipment – Emergency Rescue Vehicles at Race Circuits.
- App.5 Specific **Regulations** for **Scrutineering** Areas.
- App.6 **Regulations** for **Endurance** and Night and Bad Weather Racing.
- App.7 Guidance Notes on Dealing with Oil.

This Chapter by its Appendices governs permanent and temporary **Race Circuit Venues** and other fixed or temporary **Venues** used for **Race, Speed** and **Rallycross** and where stated to **Drag Race Venues**.

For temporary **Drag Race** strips specific provisions for shut down distances depending on length of course and other safety requirements are provided at App.1 and App.2 of this Chapter.

This Chapter must be read together with Ch.11 regarding **Emergency and Medical Services**.

All **Venues** must hold a **Track Licence** issued by the **ASN** and for **International Events** a **Track Licence** issued by the **FIA** but applied for through the **ASN**.

It is strongly recommended that land-owners or developers discuss their outline plans for any new racing circuit with **ASN** before any construction begins. This is to ensure compliance with **ASN** and governmental safety standards, and race organising facilities which **ASN** may require under the **NCR**.

1.1. In the interests of safety, animals should not be admitted to **Race**, **Speed** or **Kart** venues, but if present they must be secured inside a vehicle or building whenever **Practice** or **Competition** is taking place, working dogs excepted.

2. Welfare

2.1. At permanent motorsport **Venues** the **Venue** operator should ensure that adequate sanitation is provided and available for **Officials, Competitors** and spectators in accordance with local authority guidance.

2.2. At non-permanent **Venues** the requirements of Art.2.1 are the responsibility of the **Organising Club**.

2.3. It is recommended that marshals and **Officials** follow the guidelines below:

a. those in the proximity of gravel traps should wear protective glasses to protect from flying debris

b. motorsport can create unavoidable restricted levels of noise hence ear defenders or ear plugs which do not impede the ability to carry out tasks should be used.

c. in certain areas such as the pits hard hats should be used

CHAPTER 10 CIRCUITS AND VENUES

Appendix 1 - Regulations for Track Licences and Track Licence Applications

Regulations for Track Licences

1. General

1.1. **ASN Track Licence**s may be issued to the owner or operator of a **Course**. Where the **Licence Holder** is not the owner a written agreement must exist between the owner and the prospective **Licence Holder** setting out the responsibilities of each to ensure that all requirements of the **Licence** are met. The **ASN** has the right to call for a copy of all such agreements.

1.2. **ASN Track Licence**s are issued subject to the conditions contained within them.

1.3. The **ASN** can refuse to grant or withdraw a **Track Licence** at any time without stating a reason.

1.4. The holder of an **ASN Track Licence** must at all times cooperate with the **ASN** in connection with all matters pertaining to the **Track Licence**.

1.5. The organisation of an **Event** must not be announced or advertised until a **Track Licence** has been agreed by the **ASN**. Should an unauthorised **Event** be held on any licensed **Course** the **Licence** may be revoked and the **ASN** may decline to issue any further **Track Licence**.

1.6. A current **Track Licence** (or a photocopy) must be displayed in a prominent position at the **Track** or be available for inspection in the case of a temporary **Track**.

1.7. The **Licence** is only valid for the days on which a the **ASN Event Permit** has been issued and shall have no validity on days when the **ASN** Permit is not in force.

1.8. **Track Licence** fees are provided in Ch.1 App.2.

1.9. The **Clerk of the Course** shall always have full control of the **Course** (including **Pits** and **Paddock**) and all areas between the **Course** and **Enclosures** from the commencement of **Practice** until all competing **Vehicles** have left the **Course** at the conclusion of the **Event**.

1.10. All **Event**s will be run in the direction specified on the **Track Licence**.

2. National Track Licence

2.1. The **ASN** can grant a **National** or **Interclub Track Licence** to a **Race Circuit** or **Speed Event Venue** including Rallycross **Venues** for an individual **Event** or a series of **Event**s or if the **Track** is a permanent one until the end of the current year.

3. International Track Licence

3.1. **Application** for an International **Track Licence** for a **Race Circuit** or **Speed Event Venue** must be made to the **FIA** through the **ASN**.

3.2. The **FIA** can licence a **Track** for a stated period and after consultation with the **ASN** can refuse to grant or withdraw an International **Track Licence** applicable in the UK at any time and without stating a reason.

4. Safety Requirements

4.1. In issuing a **Licence** the **ASN** will specify the types of **Vehicles** which can compete and the maximum number which can start simultaneously in any one **Race**.

4.2. The number of **Vehicles** permitted on the **Circuit** at any one time for practicing including **Qualifying Practice** must not exceed the number permitted in a **Race** by more than 20% without prior written approval.

4.3. Except in the case of handicap **Event**s where each **Vehicle** will be allocated a suitable area at the discretion of the **ASN Timekeeper** the starting grid shall be laid out in accordance with the **ASN Track Requirements** which can be obtained from the **ASN Safety Department**.

4.4. The **Start / Finish Line** and where applicable the grid positions shall be clearly marked on the road surface.

4.5. The **Track** must be in good repair and kept thoroughly swept as necessary during the **Event**.

4.6. The **Course** must not present any unreasonable hazards to either **Competitor**s or spectators. The width of the **Track** normally shall not be less than 9m for **Race Circuits** and 3.5m for **Sprint**s and **Hill Climbs**.

4.7. When there are no natural features defining corners (eg on airfields) they must be marked out by signs indicating distance to the corner.

4.8. The siting of all cameras other than in **ASN Approved Enclosures** is not permitted.

4.9. Aircraft and or helicopters under the control of the **Event Organiser**s must never be allowed to operate below 500ft except during scheduled take-off and or landing nor at any time fly directly over the venue while motor sport is in progress.

4.10. Drones under the control of the **Organisers** or any permitted third party must have **ASN Approval** and be operated in accordance with the Civil Aviation Authority ('CAA') Drone and Model Aircraft Code. The **ASN** Drone Policy is published on the **ASN** website.

4.11. Further special safety precautions must be complied with before a **Licence** will be issued for a **Circuit** to be used for **Truck Racing**.

5. Communications

5.1. There must be an efficient means of communication (either visually by telephone or radio) between the **Clerk of the Course**, **Observers**, **First- Aiders** and other staff unless otherwise specified in the **Track Licence**. There must be a radio link (not CB) to all emergency vehicle(s).

6. Timing Facilities

6.1. At permanent **Race Circuits** an adequate sheltered area (the **Timing Box**) must accommodate at least one **ASN Licensed** Timekeeper for every four cars permitted on the **Track** for **Practice** plus a further three assistants.

6.2. The **Timing Box** must provide an adequate view of the **Track** and the start / finish Signals and the start / finish line.

6.3. In the case of new **Circuit**s the position and design of the **Timing Box** must comply with the specification laid down by the **ASN**.

6.4. At all other **Venues** including temporary ones **Timekeepers** must be provided with adequate covered accommodation for themselves and their equipment.

7. Moving Image Facilities

7.1. To be granted a **Track Licence** all fixed **Venues** should have digital recording facilities to cover all areas of the **Track**. The current specification of this equipment can be obtained from the **ASN Safety Department**.

7.2. Following any incident involving injury serious damage judicial proceedings and when otherwise appropriate the **Owner** and / or **Operator** of a **Venue** having moving image facilities shall:

a. Retain any moving image recording relating to the incident for at least 31 days after the incident.

b. Upon a written request by the **ASN** provide the original of the recording requested.

c. Keep the copy of the recording requested by the **ASN** until notified in writing by the **ASN** that the keeping of the copy is no longer required.

8. Bridges

8.1. All bridges over the **Track** must be of substantial construction approved by a qualified construction engineer and both the bridge and its approaches must be shielded to eliminate all view of the **Track** from these areas.

8.2. No people or vehicles are permitted to stop on a bridge while any **Practice** or racing is in progress.

8.3. The floor and sides of each bridge must be constructed so that no object can fall from the bridge onto the **Track**.

8.4. Bridges must have sufficient clearance above the **Track** to allow passage of emergency service vehicles and where applicable **Race Trucks**.

9. Temporary Drag Race Strips – Shut Down Distances

9.1. The following are the minimum distances per course length:

a.	1 mile	1200 metres
b.	0.5 miles	700 metres
c.	0.25 miles	400 metres
d.	0.125 miles	250 metres

Regulations for Track Licence Applications

10. ALL APPLICANTS MUST CHECK CURRENT REQUIREMENTS WITH THE ASN SAFETY DEPARTMENT BEFORE MAKING ANY APPLICATION

11. All **Applications** must be made on the **Application** form(s) provided by the **ASN** on written **Application** to the Safety Department.

12. The minimum information required by the **ASN** for issuing a **Track Licence** is:

12.1. Racing Circuits and Rallycross Courses. Outline plans and ASN Inspector's report.

12.2. Other Speed Event Courses. 1/2500 scale plan and ASN Inspector's report.

13. The following information is also required:

13.1. Length of course and position of start and finish and method of marking.

13.2. Position of paddock and pits (if any).

13.3. Siting of spectator and Official Enclosures and distance from course.

13.4. Type of fencing around Enclosures.

13.5. Type and siting of protective barriers between course and Enclosures.

13.6. Siting of ambulance(s) rescue vehicles first aid headquarters and medical staff and minimum number of staff and ambulances.

13.7. Siting of Flag Marshals and Observers and minimum number of these Officials.

13.8. Siting of fire equipment and breakdown vehicles and minimum provision.

13.9. Siting of Clerk of the Course's Headquarters, Timekeeping Box and Scrutineering area.

13.10. Locations and type of communications system around course available to Officials.

13.11. Location of nearest outside telephone and number.

13.12. Address and telephone of nearest hospital available to receive casualties.

13.13. Number of starters and types of Vehicle.

13.14. Any special features of course including type of road surface and width.

13.15. The braking area (in the case of speed events).

13.16. An outline of the estate or grounds on which the Track or course is situated, marked with the position of any footpaths or bridleways which may pass on or near the estate.

13.17. The location and operation of any trackside flashing **Light Panels**.

13.18. The presence of any structure or obstruction including advertising material adjacent to the Track and which could be the first object to be struck by a Vehicle leaving the course shall be subject to the prior approval of the ASN.

13.19. Specification details of the Venue Moving Image Recording facilities.

CHAPTER 10 CIRCUITS AND VENUES

Appendix 2 - Specific Regulations for Race and Speed and Temporary Drag Strip Events

1. Race and Speed Events

1.1. Only competing **Vehicles** are allowed on the **Track** / **Course** during an **Event** except as instructed by the **Clerk of the Course** to deal with a serious emergency when **Flag Marshals** must warn competing **Driver**s. The **Clerk** must be satisfied that the **Driver** of any **Vehicle** allowed on the **Track** / **Course** knows the **Track** / **Course Regulations** in operation.

1.2. The recommended positioning of **Emergency Vehicles** will be indicated on the **Track Licence** should one be issued. For **Event**s running without a **Track Licence** the recommended positioning of any **Emergency Vehicles** should be indicated in the **Event Regulations**.

1.3. The holder of the **Track Licence** is responsible for maintaining a register of best performances achieved on the **Track** and a permanent medical record book detailing all incidents involving injury.

1.4. **Circuit** and **Venue** owners must inform the Local Environmental Health Officer of any serious incidents (see RIDDOR 95 or contact the **ASN Technical Department**).

2. Enclosures

2.1. All **Enclosures** at **Race Circuit**s must be protected by a substantial barrier capable of preventing a car entering that **Enclosure** and preventing access from any **Enclosure** to the **Track** by any unauthorised person.

2.2. **Enclosures** at **Speed Events** (if permitted at all) not protected by a permanent barrier must be a minimum 60m from the edge of the **Course** unless otherwise authorised by the **ASN**. Adequate measures must be taken to prevent access from any **Enclosure** to the **Track** / **Course**. The **ASN** may impose conditions on any **Event Permit** granted.

2.3. Spectators shall be allowed at corners only when there is **ASN** approved protection between them and the **Track** / **Course** and preventing any access to the **Track** / **Course** by any unauthorised person.

2.4. In special circumstances the protection at **Art.2.3 above** may be given by multiple rows of securely banded tyres straw bales and / or or other material approved by the **ASN**.

2.5. Any place where spectators may congregate (eg grandstands the start and finish line opposite the pits etc) shall be protected by a substantial barrier capable of preventing a car entering that place / **Enclosure** and preventing access from such place / **Enclosure** to the **Track** / **Course** by any unauthorised person.

2.6. Ideally there should be a clear space of at least 6m between any barrier and the spectators.

2.7. Where practicable there should be a verge of at least 3m between the edge of the **Track** / **Course** and any safety barrier.

2.8. No vehicle parked in a spectator **Enclosure** should be less than 10m from the front of the **Enclosure**.

2.9. If an unauthorised person or persons penetrate beyond the authorised **Enclosure** the **Event** programme must be suspended until they have been removed.

3. Race Events

3.1. At **Race Circuit**s all posts for **Officials** outside of the pits and normal **Enclosures** shall be adequately protected and provide dry hard standing.

3.2. Each post should have an **Observers'** 'hut' from which to observe write reports and telephone **Race Control**.

3.3. There should also be a weatherproof area in which **Marshal**s can place their bags etc and which could be used for storing post equipment brooms suitable absorbent material or neutraliser etc.

3.4. The following equipment is recommended (as appropriate) at **Race Event**s (minimum flag and panel size as provided in Ch.12.

3.5. At each **Marshal**'s post:

a. Two brooms

b. Two shovels

c. One container minimum 3 litres of suitable oil absorbent material

d. At least 3 fire extinguishers each containing not less than 6kg of extinguishing product suitable for extinguishing **Vehicle** fires

e. One hazard board

f. One **Safety Car** Board (SC in black 40cm high on white background)

g. A mechanism suitable for displaying the hazard and safety car boards

h. The following flags or a light board able to display the equivalent **Signal**s:

i. One green flag
ii. One white flag
iii. One blue flag
iv. Two yellow flags
v. One yellow and red flag
vi. One red flag
vii. One purple flag (if required).

3.6. At the **Start / Finish** post, as above plus the following flags or a light board able to display the equivalent **Signal**s:

a. **National** flag

b. Black & white diagonally split flag (or panel)

c. Black flag or panel with orange disc

d. Black flag or panel

e. Black / white chequered flag

f. The following boards:

i. 1 2 3 5 and 10 minutes
ii. 5 and 30 seconds
iii. Start delayed
iv. Wet **Race**/**Qualifying** session
v. 5 second penalty
vi. 10 second penalty
vii. 1 minute penalty
viii. Stop engines
ix. Rear lights on
x. Number board to show **Competitor**'s number (white on black up to three figures)
xi. **Stop / Go Penalty**
xii. **Drive Through Penalty**

4. Speed Events

4.1. There should be sufficient **Marshal**s at each main post. The minimum equipment required is:

a. One stiff broom

b. One shovel

c. One container minimum 3 litres of suitable oil absorbent material

d. At least two extinguishers each containing not less than 6 kg of extinguishing product suitable for extinguishing **Vehicle** fires.

5. Temporary Drag Strips

5.1. For temporary **Drag** strips if there are no protective barriers available Drawing 1 applies and the spectator **Enclosures** at the Start Line are to be sited 60m from the edge of the **Course** fanning out to at least 180m from the edge of the **Course** at the finish line. Spectator viewing is restricted to within 30 metres from the start line.

6. DRAWING 1

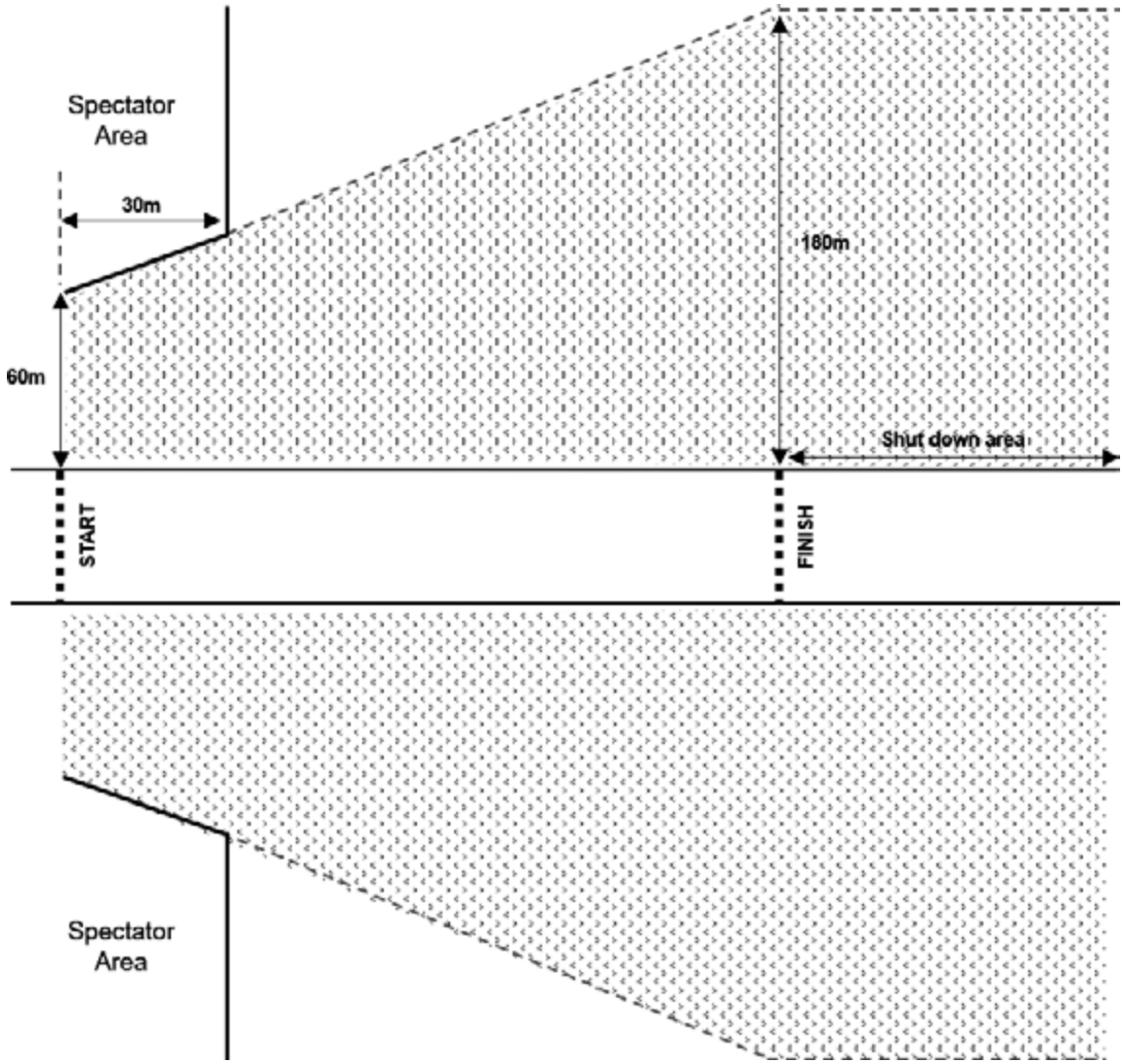

CHAPTER 10 CIRCUITS AND VENUES

Appendix 3 - Specific Regulations for Marshals Posts

1. Marshals' Posts

1.1. **Officials**' **Posts** equipped in accordance with **App.2 of this Chapter** must be established and maintained in accordance with the **ASN Track Licence** sufficient to ensure that the whole of the course is kept under observation at all times.

1.2. Each Post must be able to communicate by sight with the preceding and following one. If it is appropriate then relay posts will be specified to fulfill this condition. The distance between consecutive posts (disregarding relay posts) should not exceed 500m.

1.3. There should be sufficient **Marshal**s at each post to carry out signaling intervention and surveillance duties during **Practice**, **Qualifying** and **Racing**.

1.4. **Light Panels** may be installed to supplement or replace flag signals.

1.5. The location of these **Light Panels** around the course will be subject to prior approval by the **ASN**.

1.6. In its discretion the **ASN** may for specified **Competition**s sanction the use of **Light Panels** in substitution for any **Marshals Post**.

1.7. Where there is closed-circuit TV surveillance of the course the lights and or **Light Panels** at **Arts.1.4–1.5** above may be operated from **Race Control**.

1.8. Where there is no closed-circuit TV surveillance the **Light Panels** at **Art.1.6** above shall be operated from the **Observers**' posts.

CHAPTER 10 CIRCUITS AND VENUES

Appendix 4 - Medical Facilities – Fire Precautions and Equipment – Emergency Rescue Vehicles at Race Circuits

This Appendix must be read together with Ch.11.

1. Medical Facilities at Race Circuits (See Ch.11)

1.1. Each permanent **Circuit** shall have a **Circuit Medical Committee** consisting of:

a. A representative of the **Circuit** management.

b. A fully registered medical practitioner appointed by the **Circuit**.

c. A representative from the local First-Aid Organisation.

1.2. The **Committee** is responsible for organising a **Medical Headquarters** and supervising the supply and safekeeping of the medical equipment specified in these **Regulations**.

1.3. The **Committee** must have a formal procedure to be followed in case of a major accident and to be part of the **ASN Serious Incident Response Protocol**.

1.4. The names of **Committee** members together with the name of the person responsible for the medical arrangements at the **Circuit** shall be notified to the **ASN** which has the overriding authority to approve **Medical Centre**s and adjudicate on their compliance with the requirements of motor sport.

2. The Medical Centre

2.1. The **Medical Centre** should have easy and level access for ambulance and stretchers must offer security from press and public and be located in accordance with CAA requirements to allow helicopters to be used when necessary.

2.2. The **Centre** should consist of a minimum of three rooms of sufficient size and with adequate heating and lighting:

a. A resuscitation room capable of taking at least two patients at the same time.

b. An observation ward capable of containing two recumbent patients with total security in the event of death.

c. A treatment area for small dressings and other minor procedures.

2.3. There should also be an administration area and shower washing and toilet facilities contained within the **Medical Centre**.

3. Fire Precautions and Equipment

3.1. All fire extinguishers used at **Race** and **Speed Events** must have a valid manufacturer's (or agent's) Certificate confirming they are in working order issued immediately prior to the start of each season's racing.

3.2. This Certificate must be available for inspection by the **Steward**s of the **Event**.

3.3. At **Race Event**s manned Fire **Posts** (equipped as required by App.2 Arts.3.4 and 3.6) must be located and clearly marked at intervals round the **Circuit**. Other acceptable extinguishers may be deployed at unmanned posts or by mobile units.

3.4. Additional extinguishers should be located:

a. At marked points in the paddock

b. In the pit areas

c. At the **Scrutineering** Bay

d. In every medical room or **Centre**

3.5. In **Event**s involving the refuelling of **Vehicles** where more than five gallons of fuel is held in any one pit there must be two fire tenders and crew in attendance appropriately equipped and with immediate access to the pit area.

3.6. A Large Spill Kit is to be provided in all **Paddock** areas.

4. Emergency Rescue Vehicles and Equipment

4.1. **Licensed Rescue Vehicles** must comply with the Specifications detailed in Ch.11. The positioning of emergency vehicles must be indicated on the **Track** / **Venue Licence** and except only in emergency or **Force Majeure** circumstances may only be varied with the prior permission of the **ASN Safety Department**.

CHAPTER 10 CIRCUITS AND VENUES

Appendix 5 - Specific Regulations for Scrutineering Areas

1. Scrutineering Area

1.1. The minimum facilities for **Scrutineer**s are as follows:

2. Race Events

2.1. Covered accommodation adequate for the inspection of two **Vehicles** simultaneously and the handling of their relevant documentation.

2.2. Satisfactory facilities for inspecting the underside of a **Vehicle**.

2.3. Whenever **Vehicles** with weight limitations are competing fixed location weighing equipment must have not less than annual Weights and Measures certification (January - December) and such Certification must be present at the **Event** and prominently displayed at the weighbridge.

2.4. When weighing is carried out with portable electronic 'pad' scales a current Weights and Measures **Certificate** is not essential but if a **Certificate** is not available at the **Event** then the scales must be checked prior to use or upon request by the **Steward**s of an **Event** by means of certified weights compatible with the range of **Vehicles** to be weighed. If there is any deviation from standard as-checked then all **Regulatory** weighing must cease and the equipment must be rectified and certified before next use. Such deviation must be reported on the **Steward**'s **Report** to the **ASN** immediately following the relevant **Event**.

3. All Events

3.1. A clear flat area, large enough for a **Vehicle** to stand on.

3.2. An area for **Noise** tests that ensures conformity with the requirements of the **ASN**.

3.3. A suitable area for **Parc Fermé** / **Pits** / **Paddock**. Note: **Organiser**s have the right to designate any suitable area as **Parc Ferme** including if **applicable any Competitor**'s awning or garage.

3.4. Any pit lane must be separated from the **Track** / **Course** by a substantial barrier which must provide ample entrance and exit for single **Vehicles**.

3.5. The area between the barrier and the pits must be at least 6.5m (and preferably 8m) in width.

3.6. The working area in front of the pits (which must be at least 2.5m wide) must be marked by a white line at least 10cm wide extending the length of the pits.

3.7. The front of the pits must be of substantial construction and each pit must be at least 4m long.

3.8. There shall be an adequate number of pits for the **Vehicles** in a **Race**.

3.9. The pits and pit lane at any new **Circuit** must comply with current **FIA** and or **ASN** requirements.

CHAPTER 10 CIRCUITS AND VENUES

Appendix 6 - Regulations for Endurance and Night and Bad Weather Racing

1. General

1.1. **Organiser**s are free not to record individual lap times in practice or during a **Race**.

1.2. If times are not recorded for **Practice** starting grid positions may be based on engine capacity (with larger capacity **Vehicles** at the front) or by the methods described in Ch.12.

1.3. There must be provision for crossing the track by bridge or tunnel to access pits and paddock as follows:

a. For vehicles and pedestrians if any **Race** is to run continually for more than six hours

b. For pedestrians if any **Race** is to be run continually for more than an hour.

1.4. Accommodation for **Timekeepers** must be adequately heated and ventilated and provide full visibility through windows. There must be adjacent lavatory facilities if any **Race** is to run continually for more than half an hour.

1.5. All **Senior Officials** must have named **ASN Licensed Deputies** who are able to take appropriate action in the absence of the **Official** concerned.

1.6. There must be proper liaison with local residents and authorities before any **Race** extends over church hours or into darkness.

1.7. No snatch operations may take place during the hours of darkness unless the **Race** is under the control of a **Safety Car**.

2. Marshals

2.1. **Marshal**s must be relieved after six hours of continuous racing, following which they should operate in shifts of maximum six hours, with one shift on and one off.

2.2. Off-duty **Marshal**s should be provided with at least one hot meal, kept dry, comfortable and, if appropriate, provided with warm rest accommodation with individual sleeping facilities for at least six hours out of their off-duty period.

2.3. Transport must be provided for **Marshal**s if they are required to walk more than 500m to reach rest and refreshment facilities.

3. Lighting at Night

3.1. Where **Racing** takes place at night an area of **Track** including the **Start** and **Finish Line** appropriate to the speed of competing **Vehicles** at that point must be lit sufficiently to enable the positive identification of each competing **Vehicle**.

3.2. For safety there must be a build up to and run down from the area of maximum intensity of lighting which should be at a level at least equal to that of the headlamps of competing **Vehicles**.

3.3. All lighting installations and other equipment must:

a. not distract the competitor in any way, in particular by reason of shadow or dazzle and

b. be set out in accordance with proposals agreed in writing by the **ASN** and which were submitted to the **ASN** at least 30 days prior to the date of the **Event** and

c. be available in full working order for inspection by the **ASN** prior to the **Event** allowing adequate time for adjustments to be made if necessary.

4. General provisions

4.1. The pit area shall be lit sufficiently to enable control and replenishment to proceed.

4.2. The paddock area, spectator walkways, car parks, offices etc., shall all to be lit to ensure safety.

4.3. The **Track** itself shall be identified by reflectors placed at both **Track** edges at intervals of 5m from the 60m point before all corners until 60m past the end of the corner.

4.4. Corner warning boards shall carry reflecting markings.

4.5. All **Ambulance**s, break-down vehicles and **Official** cars shall be identified with a reflective strip at the rear and a blue or yellow flashing beacon.

4.6. All **Flag Marshals** shall have two yellow **Signal** lights (one as standby) incorporating a control giving steady or interrupted lighting.

4.7. The **Clerk of the Course** shall have a red **Signal** light available.

4.8. Each Observer shall have two hand lamps, unless at a point with permanent lighting.

4.9. **Scrutineer**s and **Timekeepers** shall have sufficient lighting to carry out their duties.

4.10. Competing **Vehicles** shall have front and rear lighting, brake lights, and direction indicator lights in working order.

4.11. Reflective identification numbers must be displayed in three places: on the forward and each side of the **Vehicles**. The side numbers must be adequately illuminated and displayed on a flat vertical surface. **Practice** / **Qualifying Practice**

4.12. Should the **Event** include a period at night each **Driver** must be required to **Practice** both in respect of the daylight period and the night-time period of **Practice**. In addition to daylight **Practice** at least one half-hour of **Practice** must be at night.

4.13. 'Night' is deemed to have occurred 30 minutes after sunset.

5. Bad Weather Racing

5.1. Rain: No specific requirement is specified regarding **Track** drainage, but when a **Track** is resurfaced whether wholly or partially sufficient camber should be incorporated to provide for water to run off.

5.2. Any significant accumulation of or standing water on the **Track** surface will make the cancellation of racing probable.

5.3. Fog: When visibility is obscured between any two adjacent **Marshal Posts**, **Racing** or **Practice** must be stopped and may be abandoned if there is no reasonable prospect of conditions improving within two hours of the session.

5.4. Snow and Ice: The following areas must be free of all snow and ice before racing can commence:

a. The **Track** including verges either up to the safety bank or for a width of 3m whichever is the lesser.

b. The **Paddock**, the **Pits** and communication roads.

5.5. Where **Course** verges are cleared any snow must not be piled into banks.

5.6. When a **Track** is snow or icebound an inspection must be made 24 hours before the start of official **Practice** to decide whether the **Event** will be cancelled or postponed.

5.7. If an adverse decision is taken the **ASN** and the **ASN Steward** and the **Competitor**s and the media must be notified.

CHAPTER 10 CIRCUITS AND VENUES

Appendix 7 - Guidance Notes on Dealing with Oil

1.1. Oil deposits on a track are generally caused in three ways:

a. From the fine spray caused by leakage on the pressure side of an oil system or from a badly fitting oil tank cap.

b. An accumulation of droppings from free flow oil systems used on motorcycle-type engines or from overflows.

c. As a mass of oil caused by the sudden emptying of a sump or tank. This is usually restricted to a relatively small area.

1.2. Where there is only a film of oil on the track surface then a fine dusting of a suitable absorbent material or neutraliser should be applied to the affected area.

1.3. Where there is oil on the track this should be soaked up using a suitable absorbent material or neutraliser.

1.4. This can be spread upwind of the oil film using a small shovelful.

1.5. The absorbent material should be scattered along the line of the oil then brushed across the line. Discolouration of the material will occur within a minute or two so that **Officials** can note the action taking place.

1.6. On no account should large amounts of material be used as this can clog the track surface when it hardens and in addition can itself cause a minor dust storm.

1.7. Where there is a mass of oil on the track, this should be soaked up using sawdust or other suitable absorbent material.

1.8. This material must be carefully swept up and a quantity of fresh suitable absorbent material or neutraliser then brushed into the area to kill the film left after removal of the material.

1.9. The suitable absorbent material or neutraliser used must be dry and reasonably new.

1.10. Oil spillage in **Pits** / **Paddock** / **Scrutineering** / **Parc Ferme** areas should be managed by the deployment of spill kits.

Chapter 11

Emergency and Medical Services (Units & Equipment)

CHAPTER 11 – EMERGENCY AND MEDICAL SERVICES (UNITS AND EQUIPMENT)

This Chapter is separated into the following appendices:

App.1 Rescue Units

App.2 Stage Safety Units (SSU)

App.3 Medical Cars

App.4 Recovery Units

App.5 Fire Tenders

App.6 Race Medical Centre

App.7 Kart Circuit Medical Centre

App.8 Basic First Aid Kit – Rally Doctors

App.9 Charts and Tables

Medical practice is dynamic and susceptible to amendment. For that reason, the full **ASN** requirements of **Emergency and Medical Services** are included within the **Emergency and Medical Services Guidance Document** on the **ASN Website.**

1. General

1.1. The **Emergency and Medical Services Guidance Document** has regulatory status and forms an integral part of the **NCR** (the '**Guidance Document'**).

1.2. All **Emergency Vehicles** are **Licensed** based on their suitability for the particular tasks required of them and the equipment carried being as detailed in the appropriate section of App.9 Table 1**.**

1.3. All units and equipment when deployed at an **Event** must be of appropriate specification and kept serviceable, clean, tidy and in a hygienic condition.

1.4. Where appropriate and as required by the equipment manufacturer test certificates and consumables are to be in date. When required, tests and servicing must be undertaken either by the manufacturer or a manufacturer approved agent. Evidence (test certificates, labels, seals etc) must be available for inspection on the **Vehicle** at the **Event.**

1.5. Where **Emergency Vehicles** are used for an Event on a **Public Highway** they must be road legal and conform with all applicable legislation.

1.6. Where **Emergency Vehicles** are transported to an Event that does not use the **Public Highway** or if such **Vehicle** is kept permanently and used exclusively at a fixed **Venue** they are not required to be road legal but they must be maintained in serviceable working order in accordance with the manufacturer's specifications.

1.7. Blue warning lights if fitted must have a means of isolation so that when travelling on the Public Highway they cannot be operated from within the cabin unless fitted to a vehicle registered with and authorised by the relevant statutory authority.

1.8. All crew members must be seated on an appropriate seat and wearing a seatbelt when the **Vehicle** is in motion unless involved in treating a casualty during transport. In such times consideration should be given to stopping the **Vehicle** to allow procedures to be conducted.

1.9. **Rescue Units, Technical Rescue Units, Stage Safety Units** and **Recovery Units** are **Licensed** annually by the **ASN**. All **ASN Registered Units** must be assessed by an approved **ASN Rescue or Recovery Assessor** on application for their first **ASN Registration**. Subsequent assessments (and evidence of such assessments) shall be required within a 3-year period prior to each **Licence** renewal.

1.10. **Commercial Rally Recovery Supplier**s may be used in place of **ASN Licensed Recovery Units.** Commercial Recovery Units are not **Licensed** but when used they are considered to be **Emergency**

Vehicles and must comply with the applicable **National Competition Rules.**

1.11. **Medical Cars** are not **Licensed** but when declared as operational by the **Chief Medical Officer** are considered to be **Emergency Vehicles** and must comply with the applicable **National Competition Rules.**

1.12. An **Ambulance**, by law, must be registered with the DVLA (Driver and Vehicle licensing Authority) and be CQC Registered, where required, in order to transport a casualty to hospital. An **Ambulance** must have a minimum crew of two consisting of an appropriately qualified driver to transport a casualty under blue lights, an appropriately qualified attendant and must carry the appropriate equipment listed in **App.9 Table 1.**

1.13. **T**he **Chief Medical Officer** along with the organiser of the event should be satisfied that the **Ambulance** is compliant with the requirements in **Art.1.12** above.

1.14. **Licensed Emergency Vehicles** must only be accepted at **Events** when crewed by appropriately **Licensed** crew members in accordance with the requirements detailed in the **NCR.**

1.15. **Organisers** using **Emergency Vehicles** must be satisfied that the **Licensed Vehicles** and crews are correct for the type and status of the **Event**.

1.16. A **Rescue Unit** can operate independently of an **Ambulance.**

1.17. **Rescue Units** must be capable of transporting a casualty to the **Medical Centre** or **Ambulance** rendezvous point if requested. In case of force majeure they must be capable of transporting a casualty directly to hospital.

1.18. A **Technical Rescue Unit** must operate in conjunction with but not necessarily located with an **Ambulance** if it is replacing a **Rescue Unit.**

1.19. The positioning of **Emergency Vehicles** shall be indicated on the **Track Licence** or in the **Event Safety Manual.**

1.20. All **Vehicle**s listed in this chapter should be safe and appropriate to drive on the **Course** and / or **Track** being used for the **Event.**

2. Actions at an Incident

2.1. Where **Rescue Units** or **Stage Safety Units** are involved and once the scene is safe, medical control will be established by the **Doctor** or **ASN Registered Paramedic** who will co-ordinate the extrication of any casualties with the **Rescue Crew Chief**.

2.2. **ASN Licensed Recovery Units** and crew may be required to support **Rescue** and / or **Stage Safety Unit** at an incident and should be prepared for this eventuality.

2.3. Should an incident require medical or rescue intervention then 2 metre and 5 metre working zones must be established.

a. Only those actively involved in the direct medical care and extrication of any casualties should be within 2 metres of the incident.

b. Only medical and rescue personnel who are involved in the medical care or extrication activities should be within 5 metres of the incident.

c. Fire cover should be provided from the outer edge of the 5-metre working zone.

d. All other **Marshals** and **Officials** must remain outside of the 5-metre working zone unless specifically invited by the **Chief Medical Officer** or **Rescue Crew Chief**.

2.4. Where a recovery operation is required a **Rescue Unit** may need to attend the incident to provide safety cover and to assist the **Recovery Crew**.

3. Post-Incident

3.1. The **Chief Medical Officer** and **Rescue Crew Chief** will assist the **Clerk of the Course** and **Event Secretary** with completing the **ASN** Incident Pack and Event Documentation for transmission to the **ASN Steward** where appointed or to the **Senior Official** and in each case for transmission to the **ASN Safety**

Department.

3.2. Any person attending and / or assisting in the management of an Incident may be required to submit a written report in order to assist the **ASN.**

4. Crew Requirements

4.1. **Licence** applicant, upgrading and maintenance criteria are detailed in **Ch.5A App.10 Art.2**.

5. Licensing and Training

5.1. **Licensing** and **Training** criteria are detailed in **Ch.5A App.10 Art.2**.

6. Documentation and Information

6.1. Application Forms for **Trainee** and **Full Licences**, together with signature record cards, can be obtained from the **ASN**. Details of approved training and licence assessments will be advised to licence holders upon request.

7. Personal Protective Equipment

7.1. It is essential that motorsport emergency personnel ensure that they are using the appropriate **Personal Protective Equipment (PPE)** when performing pre-hospital tasks including technical extrication operations and that it provides the correct level of protection.

7.2. **PPE** that may be required for specific incident, **Vehicle** or equipment risks should be identified by a Dynamic Risk Assessment (DRA) on scene.

7.3. The following items of PPE are recommended:

a. Flame-Resistant Clothing

b. Helmets

c. Face and Eye Protection

d. Gloves

e. Footwear

f. Respiratory Protection

7.4. To ensure the correct level of protection is offered to personnel it is recommended that items of PPE meet as a minimum the standards set out in the **Emergency and Medical Services Guidance Document.**

8. Duties of the Chief Medical Officer

8.1. Where present, the **Chief Medical Officer** will:

a. Deploy their team, after consultation with the **Chief Incident Officer / Safety Officer** and the **Clerk of the Course**, to ensure adequate cover for the **Event** and that the medical centre if present has medical cover available.

b. Allocate duties to each member of the team, appropriate to their skills and qualifications. Ensure each team member is familiar with the **Venue**, facilities, equipment, the means of summoning assistance and casualty evacuation and removal.

c. Ensure each team member introduces themselves to the personnel they are stationed with, confirms and checks the means of communication and with **Event** control.

d. Identify with the **Clerk of the Course** and **Chief Incident Officer / Safety Officer** the locations of emergency **Vehicles** at the **Venue** unless such is detailed on the relevant **ASN Track Licence**.

e. Ensure that all medical **Vehicles** and the Medical Centre (if applicable) are equipped to the **ASN** minimum specified level.

f. Ensure that medical staff have reliable communication with **Event** control and the public telephone service, either by radio, mobile phone or a nearby landline. Ascertain the telephone numbers for the designated hospitals and if possible the relevant **NHS Ambulance Control.**

g. Ensure that drivers of emergency **Vehicles** are aware of the need to preserve free access for their **Vehicles** to the track and that they know the evacuation routes for the **Venue** and the route(s) to the designated hospital(s). Ensure that all emergency **Vehicle** drivers are aware that they must not enter the track without explicit permission from **Race** or **Rally Control**. They should proceed only in the direction in which the **Event** is being run, unless explicitly otherwise instructed.

h. Assure themselves in conjunction with the **Clerk of the Course** that any personnel located on evacuation routes are briefed as to their role in assisting casualty evacuation.

i. Report to the **Clerk of the Course**, via **Event** control, when they are satisfied that the medical facilities are appropriate for the event, raising any regulatory detail with the **Clerk of the Course** and **ASN Steward**.

8.2. If a **Competitor** is injured in an incident or presents with other medical conditions, such that it is considered inappropriate for them to continue to compete then the **Chief Medical Officer**, shall instruct the **Clerk of the Course** to **Disqualify** the **Competitor** from participation in the **Event** on medical and / or safety grounds. The **Chief Medical Officer** should pass a report to **ASN Medical Department** detailing the nature of the injuries/medical condition and inform the **ASN Steward** accordingly.

8.3. The appropriate local hospitals must be notified by the **Event** organisers of **Venue**, date and times of the **Event**.

8.4. Ambulance **Vehicles** should be large enough to permit medical attendants to work without restriction.

8.5. The **Chief Medical Officer** shall complete the **ASN** Medical Statistics Form at the end of the **Event** and pass it to the **ASN Steward** in a timely manner to enable data collection as part of the **ASN** Risk Management Programme.

CHAPTER 11 EMERGENCY AND MEDICAL SERVICES (UNITS AND EQUIPMENT)

Appendix 1 – Rescue Units

1. General

1.1. All **Licensed Rescue Units** are required to carry the appropriate minimum level of equipment listed in the **App.9 Table 1**.

2. Purpose

2.1. **Rescue Units** transport **Licensed** crew members and equipment and provide medical and / or extrication facilities following an incident as quickly and as safely as practical.

2.2. Additional **Licensed** Rescue Units can be specified on the **Track / Venue Licence** or in the **Event Safety Manual** if necessary.

3. Type of Vehicle

3.1. **Rescue Unit Vehicle**s must be capable of carrying crew members and equipment at speeds appropriate for the surface of the course / **Track** being used.

3.2. For non-sealed surface courses the **Vehicle** must be able to maintain traction on such terrain.

4. Identification

4.1. **Vehicles Licensed** as **Rescue Units** must be clearly marked "RESCUE" and "AMBULANCE" as required and carry blue flashing warning lights and have any other visible role identification removed or covered.

4.2. “RESCUE” and “AMBULANCE” markings must be displayed in a durable manner and be of a minimum size of 79mm tall and be clearly in contrast with the background area.

4.3. “RESCUE” and “AMBULANCE” markings must be displayed on at least two sides of the **Vehicle** (front and back or each side).

4.4. **Vehicles Licensed** as **Technical Rescue Units** must be clearly marked “RESCUE” as required and carry blue flashing warning lights and have any other visible role identification removed or covered.

4.5. “RESCUE” markings must be displayed in a durable manner and be of a minimum size of 79mm tall and be clearly in contrast with the background area.

4.6. “RESCUE” markings must be displayed on at least two sides of the **Vehicle** (front and back or each side).

5. Crew

5.1. The minimum crew requirements are:

a. Rescue Unit: Race and Rallycross Events. Three Licensed Rescue crew members holding a minimum of Rescue Operator Licence grade, at least one of whom should hold a Rescue Crew Chief Licence grade. Immediate medical support must be available from a Doctor or ASN Registered Paramedic who may attend independently.

b. Technical Rescue Unit: Race and Rallycross Events. Three Licensed Rescue crew members holding a minimum of Rescue Operator Licence grade, at least one of whom should hold a Rescue Crew Chief Licence grade.

c. Rescue Unit: Rally and Speed Events only. Two Licensed Rescue crew members holding a minimum of Rescue Operator Licence grade, at least one of whom should hold a Rescue Crew Chief Licence grade. Immediate medical support must be available from a Doctor or ASN Registered Paramedic who may attend independently.

d. Technical Rescue Unit: Rally and Speed Events only. Two Licensed Rescue crew members holding a minimum of Rescue Operator Licence grade, at least one of whom should hold a Rescue Crew Chief

Licence grade.

5.2. At no time at any Event may the crew of a Licensed Rescue Unit include more than two Rescue trainees or Rescue Observers or combination thereof.

5.3. Licence application, upgrading and maintenance criteria are detailed in the Rescue Pathway.

5.4. If no Rescue crew member holding a Rescue Crew Chief Licence grade can attend the event due to unforeseen circumstances, then advice must be sought from the ASN through the ASN Steward in advance of the stage or event starting.

CHAPTER 11 EMERGENCY AND MEDICAL SERVICES (UNITS AND EQUIPMENT)

Appendix 2 – Stage Safety Units (SSU)

1. General

1.1. All **Stage Safety Units** are required to carry the appropriate minimum level of equipment listed in **App.9 Table 1.**

2. Purpose

2.1. **Stage Safety Units** transport **Licensed** and / or **Registered** crew and equipment to an incident at a **Rally** or **Event** not on the **Public Highway** for the purpose of rendering the scene safe and to provide immediate medical care.

3. Type of Vehicle

3.1. The **Stage Safety Unit** should be a car, an estate car or a car derived van with tyres suitable for the terrain and with underbody protection.

4. Identification

4.1. The **Vehicle** must be clearly marked “STAGE SAFETY UNIT” or “SSU” and carry blue or amber flashing warning lights and have any other visible role identification removed or covered.

4.2. “STAGE SAFETY UNIT” or “SSU” markings must be displayed in a durable manner and be of a minimum size of 79mm tall and be clearly in contrast with the background area.

4.3. “STAGE SAFETY UNIT” or “SSU” markings must be displayed on at least two sides of the vehicle (front and back or each side).

5. Crew

5.1. The crew will consist of a minimum of two fully **Licensed Rescue Crew** members, one of whom may be replaced by a **Doctor** or **ASN Registered Paramedic**.

5.2. Whilst there is a requirement to carry medical equipment, this should only be accessed and used by suitably qualified personnel.

5.3. An additional person may be carried but if that person is a trainee **Rescue Licence** holder they may use no more than two **Stage Safety Unit** duty signatures for the purpose of upgrading their **Licence.**

5.4. **Licence** application, upgrading and maintenance criteria are detailed in **Ch.5A App.10 Art.2.1**.

CHAPTER 11 EMERGENCY AND MEDICAL SERVICES (UNITS AND EQUIPMENT)

Appendix 3 – Medical Cars

1. General

1.1. All **Medical Cars** are required to carry the appropriate minimum level of equipment listed in **App.9 Table 1.**

2. Purpose

2.1. **Medical Cars** transport **Licensed** and / or **Registered** crew and equipment to an incident at a **Race** or **Speed Event** to provide immediate medical care.

3. Type of Vehicle

3.1. The **Medical Cars** should be of a type that is safe and appropriate to drive on the course / **Track** being used for the **Event.**

3.2. **Medical Cars** must be capable of safely carrying crew members and equipment at speeds appropriate for the surface of the course / **Track.**

3.3. For non-sealed surface courses the **Vehicle** must be able to maintain traction over such terrain.

4. Identification

4.1. The **Vehicle** must be clearly marked “MEDICAL” or “DOCTOR” and carry blue flashing warning lights and have any other visible role identification removed or covered.

4.2. “MEDICAL” or “DOCTOR” markings must be displayed in a durable manner and be clearly in contrast with the background area.

4.3. “MEDICAL” or “DOCTOR” markings must be displayed on at least two sides of the vehicle (front and back or each side).

5. Crew

5.1. The crew will consist of a minimum of two persons. It is recommended the crew should consist of a **Doctor** and **ASN Registered Paramedic**, however a minimum of one **Doctor** or one **ASN Registered Paramedic** must always be present. In all cases the crew must be acceptable to the **Chief Medical Officer**.

CHAPTER 11 EMERGENCY AND MEDICAL SERVICES (UNITS AND EQUIPMENT)

Appendix 4 – Recovery Units

1. General

1.1. All **Licensed Recovery Units** are required to carry the appropriate minimum level of equipment listed in App.9 Table 1.

2. Purpose

2.1. **Recovery Units** are primarily to provide for the recovery of **Vehicle**s.

3. Types of Vehicle

3.1. Either:

a. A four-wheel drive equipped with an 8000lb (3.6 tons) or higher capacity **Vehicle** mounted winch that has the capability by **Vehicle** mounted or towed equipment to execute the suspended towing or transport of a **Vehicle**; or

b. a rear-wheel drive **Vehicle** equipped with dual rear wheels and a rear mounted spectacle lift and an 8000lb (3.6 tons) or higher capacity **Vehicle** mounted winch. It is strongly recommended that such **Vehicle**s are equipped with a limited slip or locking rear differential.

3.2. **Recovery Units** may attend events without towed equipment to execute the suspended towing of a **Vehicle** where this is permitted within these **Regulations** and by the **Organisers** of the **Event**.

4. Identification

4.1. The **Vehicle** must be clearly marked “RECOVERY” and carry amber flashing warning lights and have any other visible role identification removed or covered.

4.2. “RECOVERY” markings must be displayed in a durable manner and be of a minimum size of 79mm tall and be clearly in contrast with the background area.

4.3. “RECOVERY” markings must be displayed on at least two sides of the vehicle (front and back or each side).

5. Crew

5.1. The crew must consist of a minimum of two **Licensed** operators, at least one of whom must hold a full **Recovery Crew Licence**.

5.2. **Licence** application, upgrading and maintenance criteria are detailed in Ch.5A App.10 Art.2.3.

CHAPTER 11 EMERGENCY AND MEDICAL SERVICES (UNITS AND EQUIPMENT)

Appendix 5 – Fire Tenders

1. General

1.1. All new **Fire Tenders** should comply with the guidance in this section.

1.2. All **Fire Tenders** are required to carry the appropriate minimum level of equipment listed in **App.9 Table 1.**

2. Purpose

2.1. **Fire Tenders** transport crew and equipment to the scene of an incident.

2.2. The **Fire Tender Vehicle** and crew fight any fire present and isolate the **Driver** from the fire until the **Driver** can get to safety and then endeavour to, in most instances, extinguish the fire completely.

3. Types of Vehicle

3.1. **Fire Tender Vehicle**s must be capable of safely carrying crew and equipment at speeds appropriate for the surface of the **Competition Course** / **Track.**

3.2. For non-sealed surface courses the **Vehicle** must be able to maintain traction over such terrain.

4. Identification

4.1. The **Vehicle** must be clearly marked "FIRE" and carry blue flashing warning lights.

4.2. “FIRE” markings must be displayed in a durable manner and be of a minimum size of 79mm tall and be clearly in contrast with the background area.

4.3. “FIRE” markings must be displayed on at least two sides of the vehicle (front and back or each side).

5. Crew

5.1. The crew shall consist of two people who must hold at least a **Grade 2 ASN Marshal Registration** or a **Rescue Licence.** The crew must be experienced at driving on a **Competition Course / Track** and be familiar with the operation of all equipment carried on the **Vehicle**.

CHAPTER 11 EMERGENCY AND MEDICAL SERVICES (UNITS AND EQUIPMENT)

Appendix 6 – Race Medical Centre

1. General

1.1. The circuit **Medical Committee** should ensure that the **Medical Centre** is properly equipped and maintained.

1.2. It is essential that proper patient records are kept and that procedures for the safe disposal of potentially hazardous waste material, including dressings, contaminated clothing, syringes, needles and sharps, are in place.

1.3. The risk of cross-infection must be addressed (e.g. by wearing gloves, aprons and goggles). Disposable equipment should be used where possible and sterility ensured at all times.

1.4. Records must be kept of the use of all drugs and fluids (including quantities and expiry dates) and equipment maintained according to appropriate service schedules. All equipment is at all times to be of appropriate specification and kept serviceable, clean, tidy and in a hygienic condition.

1.4.1 Where appropriate and as required by the manufacturer, test certificates and consumables are to be 'in date'. When required, tests and servicing must be undertaken either by the manufacturer or a manufacturer approved agent. Good quality copies of current certificates must be available within the **Medical Centre**.

1.5. The following list of equipment, fluids, drugs, dressings etc. is considered to be the minimum requirement for a **Medical Centre**. However, it is essential that individual doctors equip themselves with the drugs and equipment they judge necessary.

1.5.1 All equipment must be checked, serviced and stored according to the manufacturer's recommendations. There should be sufficient equipment and drugs for the immediate resuscitation of a minimum of two patients.

2. Equipment and Drugs

2.1. Resuscitation

- Oropharyngeal airways (eight assorted sizes 2, 3 and 4)
- Suction apparatus mains, battery or hand operated capable of 300mm Hg suction with reservoir not less than 350ml or overflow system with catheters and wide bore suction
- Self-inflating manual resuscitator with facemask and O2 reservoir
- O2 supply (min size F1360 litres) and spare with reducing valves, flowmeters as necessary
- O2 tubing and masks
- Laryngoscopes x 2 with spare batteries and bulbs
- Endotracheal tubes cuffed x 6 (sizes 6.0mm to 9.0mm)
- Nasopharyngeal tubes x 3 (assorted sizes)
- Entonox with appropriate on demand delivery system (NB storage regulations)
- IV cannulae (six assorted sizes 1.0 to 2.0mm)
- IV administration sets x 6
- Pressure infusor
- Assorted syringes and needles.
- IV cannulae 14G, 16G 18G 20G at least 12 of each and appropriate Paediatric sizes to ensure sufficient numbers are available for the event
- Saline 0.9% (or equivalent) (1000ml x 8): under the direction of a Medical Officer

Surgical

- Appropriate equipment to secure a surgical airway

Miscellaneous

- Casualty immobiliser (vacuum mattress)

2.2. Monitoring and diagnostic

- Sphygmomanometer aneroid/mercury (for latter consider regulations re Hg spillage)
- Wave Form Capnography capability
- Non-invasive Blood Pressure Monitor
- Pulse oximeter
- Defibrillator with leads, electrodes pads/gel
- ECG
- Thermometer
- Blood glucose estimation kit.

2.3. Splints and Dressings

- Large field dressings x 10
- Bandages and adhesive tape in assorted sizes
- Sterile non-adhesive and adhesive wound dressings
- Burn dressings and supply of sterile transparent bags assorted sizes
- Semi rigid cervical collars (assorted x 4)
- Splints.

2.4. Drugs: it is mandatory that the following be available as a minimum requirement.

- Cardiac arrest emergency drugs, according to the current UK Resuscitation Council Guidance
- A supply of parenteral analgesics.

2.5. Surgical

- Chest drainage kit
- Cricothyrotomy / Cricothyroidatomy kit
- Minor op sterile pack with needle holder, scissors, artery forceps, scalpel and blades
- Suture materials
- Skin Antiseptic

2.6. Miscellaneous

- Scoop stretcher
- Casualty immobilser (vacuum mattress)

Appendix 7 – Kart Circuit Medical Centre

1. This must comprise a room large enough to accommodate a single bed for the observation and treatment of a single casualty. As a minimum it must be equipped with first aid equipment as required under HSE Code of Practice ACOP 1997 for organisations of 21 to 50 people, including an eye wash station with 2 x 500ml of sterile saline solution, a set of stiff neck extraction collars, including paediatric sizes, and portable resuscitation equipment.

CHAPTER 11 EMERGENCY AND MEDICAL SERVICES (UNITS AND EQUIPMENT)

Appendix 8 – Basic First Aid Kit – Rally Doctors

1. The following items are recommended to be carried by Rally **Doctors** in an appropriately assembled portable kit:

a. As listed in **Medical Car** equipment excluding chest drain kit and the following additional items:

- Sterile eyewash 2 sachets
- Protective goggles
- Survival blanket x 2
- Blanket x 2
- In addition a flashing blue beacon, an identifying tabard where required, appropriate protective clothing, incident report forms (x10) and a powerful torch are considered necessary.

b. A comprehensive list of drugs is not listed however the individual **Doctor** is expected to carry those drugs that they feel are necessary and a supply of analgesic drugs for parenteral and oral administration.

c. Any further drugs and equipment that may be deemed to be appropriate by way of specialist expertise are the responsibility of the individual **Doctor**.

d. It is recommended that any doctor regularly involved in **Rally** medicine should seriously consider acquiring a **ASN** frequency radio set.

CHAPTER 11 EMERGENCY AND MEDICAL SERVICES (UNITS AND EQUIPMENT)

Appendix 9 – Charts and Tables

Table 1

EMERGENCY VEHICLE EQUIPMENT REQUIREMENTS

	Ambulance	Medical Car	Stage Safety Unit	Rescue Unit	Technical Rescue Unit	Fire Tender	Recovery Unit
General							
Warning lights (to be visible 360° with low mounted high-intensity units to be visible from the rear)	Blue	Blue	Blue or Amber	Blue	Blue	Blue	Amber
Radio equipment - Rally 81.575MHz FM / 81.5375MHz FM. The supply of equipment using alternative radio frequencies is the responsibility of the organising club	*	*	*	*	*	*	*
Appropriate personal protective equipment for each crew member	*	*	*	*	*	*	*
Tabard for identification of Crew Chief at incident scenes				*	*		
Vehicle powered lighting and torches		*	*	*	*		*
Environmental Spill Kit – Medium			*	*	*	*	*
NOTE: Blue warning lights must be fitted with a means of isolation so that when travelling on the Public Highway they cannot be operated from within the cabin unless fitted to a vehicle registered with and authorised by the relevant statutory authority.							
Firefighting Equipment							
Fire extinguisher containing not less than 6kg of extinguishing product suitable for extinguishing vehicle fires		**1**	**2**	**2**	**2**	**4**	**2**
Fire-resistant blanket (1m x 1m minimum)			*	*	*	*	**R**
Minimum 50 litres AFFF with foam generating capability or appropriate equivalent - Existing Fire Tenders only						*	
300 litres water in tanks with integral mixing ability to support AFFF foam generation or the use of appropriate equivalent. Where other pre-mixed firefighting media are in use as an alternative to AFFF, the integral mixing ability may be disregarded if not required						**R**	
2 Beaters for grass fires						**R**	
1 Broom				**R**	**R**	*	**R**
Technical Equipment							
Hand Tools							
Suitable cutters for harness, straps, etc		*	*	*	*	*	*
1 Hacksaw and supply of blades			*	*	*		*
1 Small bow saw or suitable equivalent			*	*	*		*
1 Pair tin snips or equivalent				*	*		
1 Crowbar (minimum 90cm)		*	*	*	*	*	*
1 Pair bolt croppers (minimum 45cm)			*	*	*		*
1 Pair mole grips			*	*	*		*
1 General tool kit to include AF and metric spanners, screwdrivers, sockets, hex keys, “Torx” and other drivers etc to aid access to vehicle			*	*	*		*

	Ambulance	Medical Car	Stage Safety Unit	Rescue Unit	Technical Rescue Unit	Fire Tender	Recovery Unit
1 Glass breaker (eg, Spring Centre Punch)		*	*	*	*		
Hammer (minimum 1kg)			*	*	*		*
1 Spade						*	*
Powered Tools							
1 Powered metal cutting saw with an adequate selection of blades			R	*	*		
1 Cutting saw, oscillating (electric, air or hydraulic)			R	*	*		
1 Powered cutter 3cm minimum jaw opening suitable for cutting pedals				*	*		
1 Powered large spreader				*	*		
1 Powered large cutter to cut A, B, C pillars				*	*		
1 Powered ram (and extensions if required to reach a minimum extended length of 1200mm)				*	*		
Powered hydraulic pump and appropriate hoses (unless powered cutters and spreaders are battery operated)				*	*		
Safety							
Steering wheel airbag protection cover				R	R		
Hard and soft protection for use when using tools				*	*		
Sharp edge protection covers				*	*		
Stabilisation, Securing and Towing							
3 Suitable ropes or strops (2 tonne minimum SWL)				R	R	R	*
Selection of coupling hardware suitable for recovering vehicles				*	*	R	
Equipment suitable for stabilising vehicles			*	*	*		*
Equipment suitable for securing and towing vehicles			*	*	*		*
1 Opaque sheet and fastenings suitable for covering vehicle			*	*	*	R	*
1 Trolley jack, minimum capacity 1500kg, or high lift jack, or air jack system.			*	*	*		*
Vehicle Mounted Winch - Minimum Capacity 8000lb (3.6 tonnes) The winch needs to be mounted to the recovery unit either by permanent fixing or a rated receiver hitch which is capable of handling the capacity of the winch in any situation it may be used.							*
A minimum of 28 metres (92 ft) of winch cable – Minimum capacity 8000lb (3.6 tonnes)							*
Winch cable extensions to a minimum of 28 metres, where event terrain would require long which distances. – Minimum Capacity 8000lb (3.6 tonnes)							*
Strop (2 tonne minimum SWL) 3 metre long (recommended)							2
3.25 tonne Shackles							2
4.75 tonne Shackles							4
2 tonne Snatch Block							*
1 set rated chain brothers, 2 metres per leg (SWL 2.12 tonnes - 7mm chain minimum)							*
Electric and Hybrid Vehicle Equipment							
Gloves (Class 0) (inc. cotton inner and leather outer) - One pair per Crew member				*	*		

	Ambulance	Medical Car	Stage Safety Unit	Rescue unit	Technical Rescue unit	Fire Tender	Recovery Unit
Arc Face Shield (Class 0) (Could be replaced with a suitable helmet and visor) - One per Crew member				*	*		
Rescue Pole				*	*		
A selection of Insulated Anti-Slip Matting				*	*		
Thermal Imaging Camera				*	*		
NOTE: All EV equipment must be rated to a minimum of 1000 volts DC. EV equipment is only required where EV vehicles are competing in the Event.							
Truck Racing Equipment							
Equipment as per the Truck Racing provisions in the current Appendix H to the FIA Sporting Code must be available at the Event							
FIA and International Events							
Equipment as per the provisions in the current Appendix H to the FIA Sporting Code must be available at the Event							
Medical Equipment							
Defibrillation and Monitoring							
Defibrillator with monitoring and recording capability and sundries	*	*	R				
Automated external defibrillator and sundries			*	*	*		
Pulse Oximeter	*	*	*	*	*		
Sphygmomanometer	*	*	*	*	*		
Stethoscope	*	*	*	*	*		
Drugs							
Resuscitation drugs in accordance the current UK Resuscitation Council / JRCALC clinical guidelines	*	*					
Drugs for Rapid Sequence Induction and difficult airway management		Q					
A selection of analgesic drugs - inhaled, parenteral and oral (to be supplied and carried by the doctor or paramedic)	*	*		Q			
1 Portable entonox set and 1 spare entonox cylinder	*		*	*			
Other drugs eg GTN spray, Aspirin, antibiotics etc, see current JRCALC clinical guidelines for guidance	*	*					
Airway and Breathing							
1 Bag Valve Mask (BVM) and O2 reservoir	*	*	*	*	*		
3 Oropharyngeal airways to include nos. 2, 3, 4	*	*	*	*	*		
3 Nasopharyngeal airways to include nos. 6, 7, 8	*	*	*	*	*		
1 Laryngoscope with disposable blades or similar, and Magill forceps	*	*	*	*	*		
1 Portable suction machine (able to obtain 300mm Mercury vacuum)	*	*	*	*	*		
Yankauer suction catheters or equivalent	*	*	*	*	*		
'i-gel' Supraglottic airways (in sizes 2, 3, 4 & 5) plus catheter mount and lubricant	*	*	*	*	*		
Endotracheal Tubes in a range of sizes including sizes 6.0, 7.0 and 8.0 plus catheter mount, lubricant, method for securing a tube, 20ml syringe, bougies/introducers, HEPA filter and capnography that complies with current requirements from the Royal College of Anaesthetists		Q	Q				

	Ambulance	Medical Car	Stage Safety Unit	Rescue unit	Technical Rescue unit	Fire Tender	Recovery Unit
Equipment suitable for managing a difficult airway including video laryngoscope		Q					
1 Portable oxygen set (900 litres in not more than 3 cylinders). Regulator to be capable of delivering 15 litres/min	*	*	*	*	*		
Supply of non-rebreathing oxygen masks, both adult and paediatric	*	*	*	*	*		
Supply of oxygen masks and cannulas to include nebulising mask, both adult and paediatric	*	*		*			
Equipment to allow decompression of a pneumothorax	*	*	Q	Q	Q		
Surgical airway kit ('mini trach') or equivalent		*	R	Q	Q		
Paediatrics							
Consideration should be given to carrying equipment suitable for treating paediatric patients such as BVM, airway adjuncts, IV cannulae, intraosseous access and extrication collars		*	R	R			
Bleeding							
2 Combat Application Tourniquet (CAT) or equivalent	*	*	*	*	*		R
A selection of haemostatic dressings	*	*	*	*	*		
A selection of trauma and compression dressings	*	*	*	*	*		R
A comprehensive selection of dressings including large sizes (eg 20cm x 40cm) and bandages	*	*	*	*	*		
Circulation							
4 Intravenous giving sets	*	*	*	*	*		
12 Intravenous cannulae (three each 14, 16, 18, 20) and suitable fixation	*	*	*	*	*		
4 x 500ml 0.9% Sodium Chloride or equivalent (to be supplied and carried by the doctor or paramedic)	*	*	*	*			
Intraosseous access equipment including pressure infusion cuff		R	R				
Extrication and Immobilisation							
2 sets of extrication collars or 2 adjustable extrication collars	*	*	*	*	*		
2 Spinal Immobilisers (eg, KED, RED, TED)				*	*		
1 Scoop stretcher c/w head immobilisation system and straps	*			*	*		
1 Extrication board	*			*	*		
1 Vacuum mattress				*	*		
Selection of splints	*		*	*	*		
Traction splint, suitable for long bone fractures	*			*	*		
Pelvic binder	*	*	R	*	*		
General							
1 Pair heavy duty scissors	*	*	*	*	*		
Disposable scalpels	*	*	*	*	*		
A supply of cling film and unused clean plastic bags and waterjel or equivalent dressings for the treatment of burns	*	*	*	*	*	*	*
5 litres clean, fresh tap water		*	*	*	*	*	*
Sterile solution for eye irrigation	*	*	*	*	*	*	*
2 Survival blankets		*	*	*	*		*

	Ambulance	Medical Car	Stage Safety Unit	Rescue unit	Technical Rescue unit	Fire Tender	Recovery Unit
1 Stretcher (ambulance cot type)	*			*			
Disposable surgical gloves and appropriate medical PPE	*	*	*	*	*		
Disposable sharps container and plastic bag for clinical waste	*	*	*	*	*		
Patient Report Forms	*	*	*	*	*		
First Aid Kit in compliance with requirements for less then 25 employees (small) as defined by the current BS8599-1			*	*	*	*	*

NOTES:

In the table the following markings are used:

* denotes mandatory

R indicates a Recommended item

Q indicates mandatory equipment for use by a suitably qualified and experienced doctor or paramedic

A number in the Unit column indicate the quantity of mandatory items where different units have different requirements

From 1st January 2025 it is recommended that the following should be complied with:

In accordance with EN 13204 or equivalent (NFPA 1936), the minimum requirement for the powered large cutter, combi tool and powered large spreader should be:

BC 150 G or BK 150 H for the cutter

CC/CK 150 H for the combi tool

Min. spreading force (EN 13204) = 40 kN for the spreader

NOTE: It is not acceptable to carry only a combi tool. If the combi tool is being carried as a replacement for either the powered large cutter or the powered large spreader then it must comply with the appropriate requirement above.

Equipment must be maintained in line with manufacturers guidelines and industry best practice. When required, tests and servicing must be undertaken either by the manufacturer or a manufacturer approved agent. Evidence (test certificates, labels, seals etc) must be available for inspection on the vehicle or at the event.

All consumable items must be 'in date' and in undamaged manufacturers packaging where appropriate.

For all categories of vehicle there should be adequate supplies of compressed air (in cylinders or from a compressor) and/or hydraulic power supply for powering the range of equipment carried on the vehicle. Where equipment is battery powered an adequate supply of charged batteries is to be available.

Chapter 12

Race

CHAPTER 12 RACE

This Chapter must be read in conjunction with Chapters 1-11 as appropriate.
This Chapter is separated into the following appendices:

Chapters 1-11 inclusive as well as any relevant **Official Documents**.

All Appendices are of **Regulatory** value. Except as stated references in this text are to Appendices to this Chapter.

App.1 Junior **Car Racing**

App.2 **Championships** and Series

App.3 **Race Officials**

App.4 **Organisers'** Regulations and Restrictions

App.5 Incidents, Medical Facilities and **Emergency Rescue**

App.6 **Competition Regulations**

App.7 **Track Regulations** and Driving Standards

App.8 **Signals** by **Flags** and Light Panels

App.9 End of **Race** Results

App.10 **Penalties**

App.11 Pit and **Paddock Regulations**

App.12 **Competitor Regulations**

App.13 **Competitors Vehicles Technical Regulations**

App.14 Specific Dimensions of Single Seater **Cars**

1. Formulae Regulations

1.1. Are available from the **ASN Technical Department**.

1.2. The following parts of **Ch.9 (competitors' Vehicles and Vehicle safety equipment)** remain unmodified in this section unless modified in the **ASN Formulae Regulations**: **Suspension**; **Transmission**; **Cooling**; **Exhausts**.

2. Truck Racing

2.1. Specific regulations are available from the **ASN Technical Department** for **Truck Racing**.

2.2. Unless the nominated **Clerk of the Course** is a **Licensed International Clerk of the Course** the nomination must be approved by the **ASN**.

2.3. The principles of the **Safety Car** may be applied to **Truck Racing** where the leader assumes the role of the **Safety Car** as specified in the Official Documents.

CHAPTER 12 RACE

Appendix 1 - Junior Car Racing

1.1. The **ASN** may authorise a maximum of four **Junior Car Racing Championship**s annually each of which must be endorsed and submitted for approval by an **ASN Recognised Club**. The **ASN** has the authority in its entire discretion to exceed the above number in circumstances which the **ASN** considers to be appropriate or where the **FIA** has given approval.

1.2. All **Junior Car Racing Championship**s must comply with Ch.4 App.3. The **Championship** may make application to hold an **Event** outside the UK subject to **ASN** consent and the circuit being in possession of a valid **FIA** homologation (graded FIA 1-4 only) and written consent from the host **ASN**.

1.3. Any proposed **Vehicle** must fully comply with the **ASN Junior Formulae Technical Requirements** as published by the **ASN** from time to time (subject to the **ASN** Stability **Regulations** Ch.1 Art.1.13).

1.4. The **ASN** in its discretion shall licence **Junior Car Racing Championship Organising Club**s and such licences when granted remain valid for 3 calendar years expiring 31 December in the third calendar year when prospective **Organiser**s may again apply for a licence. The **ASN** in its discretion may impose conditions on such licences.

1.5. Any new manufacturer backed **Junior Car Racing Championship** must have guaranteed manufacturer support for a minimum of three years and Ch.4 App.3 shall apply in its entirety except that Art.1.6 below applies (Ch.4 App. 3 Art.1.17).

1.6. Each **Junior Car Racing Championship** should achieve an average of 12 starters during any one year to retain **Championship** status.

1.7. A **Junior Car Racing Championship** will be permitted to accept registrations from **Driver**s who have achieved their 14th birthday and who will be permitted to continue until 31st December of the year of their 17th birthday.

1.8. Ch.6 App.5 Art.1 applies and **Driver**s must satisfactorily complete the extended **ARDS** course specifically designed for **Junior Car Racing**. The **ASN** may impose conditions on a **Competitor** holding and / or retaining such a licence.

1.9. The **Competition Licence** application for a **Race Club Licence** must be endorsed and submitted to the **ASN** by one of the **Junior Race Championship Organising Club**s and the **Race Club Licence** issued will be restricted to the permitted **Junior Race Championship** and subject to Art.1.11 below is not valid for any other **Event** or discipline. A **Licence** issued under these provisions is hereafter referred to as 'a **Junior Race Licence**'.

1.10. The **Junior Race Licence** will state '**Junior Championship UK** Only'.

1.11. The **Junior Driver** will be permitted to participate in those **Championship**s authorised by the **ASN**.

1.12. The holders of **ASN Junior Race Licences** are permitted to participate in a Motor Sport Ireland **Junior Car Racing Championship** and any issued licence will be retained by the **ASN** in this regard.

1.13. **Licences** issued by countries outside the UK will be deemed valid for **Junior Car Racing** subject to their acceptance being specified in the **Championship** Regulations and

a. specific written confirmation from the **Licensing ASN**; and

b. satisfactory completion of the extended **ARDS** course specifically designed for **Junior Car Racing**.

1.14. **Junior Race Licence** holders appearing in **Judicial** Procedures must be accompanied by the signed on responsible adult and the **Event Safeguarding Officer** should also be present if possible.

1.15. When the **Driver** reaches 16 years of age the **Junior Race Licence** holder is eligible to be issued a **Race Club Licence**. Upon issue of a **Race Club Licence** (unrestricted) by the **ASN** and having competed within **Car Racing Event**s the **Driver** will no longer be eligible to hold the **Junior Race Licence** nor to compete within the **Junior Racing Formulae**.

CHAPTER 12 RACE

Appendix 2 - Championships and Series

1. General

1.1. It is the **Organising Permit** holder's responsibility to ensure that any **Event** possess either a **Championship Permit** or a **Series Registration** document as appropriate.

2. Championships

2.1. This Appendix must be read in conjunction with Ch.3 and Ch.4 App.3 - **Car** and **Truck Race Championship**s.

3. Series

3.1. A series of individual **Event**s organised by a recognised **Club** to a common set of **Sporting** and/or **Technical Regulations** with no accumulative winner must register with the **ASN** on the prescribed form which must include:

a. title

b. **Vehicle**(s) and

c. minimum licence status.

3.2. A **Registration Fee** will be levied by the **ASN** as published from time to time (Ch.1 App.2).

3.3. **Registration** will be accepted by the issue of a **Series Registration** document.

4. Alternative Championship Rounds

4.1. If a **Championship** round is cancelled due to reasons of safety or **Force Majeure** the **Championship Permit** holding **Club** is entitled contrary to the provisions of Ch.3 App.10 Art.4.2 to arrange an alternative date (and if necessary **Venue**) upon which to run the **Event** provided that not less than 85% of the **Competitor**s entered for the **Event** agree to the change. Only those Entered for the cancelled **Event** may take part in the alternative **Event**.

4.2. Agreement of the relevant **Competitor**s must be sought either:

a. on the day of cancellation if the **Competitor**s entered are present at the **Event** or

b. by contacting the **Competitor**s via their address/email as stated on their **Championship Registration** form. Failure to respond within 48 hours via e-mail or 'Signed For' delivery by post will be deemed to signify the **Competitor**'s agreement to the change.

5. Single Seater Championships

5.1. A Single Seater **Championship** may make application to the **ASN** to accept registrations from **Driver**s who have achieved their 15th birthday on condition that the **Driver** is entitled to hold or is the current holder of an **International** '**ITE**' or '**ITF**' **Kart Licence** and that the eligible **Vehicles**:

a. have a Weight/Power ratio greater than 3 kg/hp and

b. meet the current **FIA Formula 3** (Article 275) or **FIA Formula 4** (Article 274) crash test and safety requirements.

5.2. **Competitors** must satisfactorily complete the extended **ARDS** course specifically designed for **Junior Car Racing**.

5.3. The **Competition Licence** application must be endorsed and submitted to **ASN** by the **Championship Organising Club**.

5.4. This **Licence** will be restricted to the permitted **Championship** and will be held by the **Championship Organising Club**.

5.5. This **Licence** is not valid for any other event or discipline.

5.6. Once the driver reaches 16 years of age they are eligible to be issued an unrestricted **Race Club Licence**.

5.7. A **Licence** issued by an EU **ASN** may also be accepted subject to agreement with **ASN**.

CHAPTER 12 RACE

Appendix 3 - Race Officials

This Appendix must be read in conjunction with the relevant provisions of Chapters 2 – 5 inclusive

At **International Event**s the provisions of the **Code** may take precedence.

1. Clerks of the Course

1.1. One **Clerk of the Course** must be nominated as the **Senior Clerk of the Course** responsible for the overall control of the **Event**.

1.2. All **Clerk**s of the **Course** must be identified by name in the **Official Documents** for the **Event**.

1.3. A **Championship** or **Series** may appoint a **Permanent Clerk of the Course** provided that person holds the appropriate grade of **Clerk**s **Licence** (minimum grade **National**).

1.4. In the case of all **Race Event**s the **Clerk of the Course** must hold a **Clerk of the Course** licence issued by the **ASN** valid for the grade of **Event** (minimum grade **National**).

1.5. For details of **Clerk**s **Licences Retention** and Upgrading refer to **Ch.5.**

1.6. **Technical Officials**

1.7. The **Organiser**s must appoint a **Chief Scrutineer** and **Technical Officials** in adequate number for the management of safety and eligibility scrutineering for the **Event**. They must be identified by name in the **Official Documents** for the **Event**.

1.8. Except where rectified before participation in the **Competition** all non-compliance with safety and applicable eligibility regulations must be reported to the **Chief Scrutineer** and the **Clerk of the Course** in writing. **Technical Officials** have no **Judicial** responsibility.

1.9. Any **Competitor** declaration concerning a **Vehicle** (**Ch.7**) or **Competitor Safety Equipment** (**Ch.9**) considered by any **Technical Official** to be false or where **Competitor Safety Equipment** is suspected of being fake must be reported in writing to the **Chief Scrutineer** and **Clerk of the Course**.

1.10. In the case of **Truck Racing** unless the nominated **Clerk of the Course** is **Licensed** at the appropriate **International** grade their appointment must be approved by the **ASN**.

2. Judges

2.1. **Judges** may be appointed by the **Organiser**s to adjudicate on:

a. False **Start**s.

b. Finishing **Order**.

c. Crossing a **Penalty Line**.

d. Overtaking under **Red** or **Yellow** or **Purple Signal**s.

e. **Noise**.

f. **Track Limits**.

2.2. The **Chief Timekeeper** will be a **Judge** in respect of laps covered and time.

2.3. The **Chief Scrutineer** and members of the **Technical Commission** will be **Judges** in respect of eligibility and when acting together with such a person then an **Eligibility Scrutineer** will be a **Judge** of Fact.

2.4. **Judges** and their function must be named in the **Official Documents** for the **Event** and identified by name on the **Event Official Noticeboard**.

Driving Standards Observers (Ch.5)

3. Driving Standards Observers may be appointed to report on:

a. Driving in a manner incompatible with general safety (**Ch.2 App.1 Art.1.13**).

b. Failure to comply with displayed **Signals** (**App.8 to this Chapter**)

c. Failure to comply with **Track Regulations** (**App.7 Art.1.1 to this Chapter**)

3.1. **Driving Standards Observers** shall be located in accordance with the instructions of the **Clerk of the Course** and shall operate and report to the **Clerk of the Course** as considered appropriate.

3.2. **Driving Standards Observers** must make themselves known to the **Senior Post-Chief** on duty at adjacent posts in their vicinity.

3.3. **Driving Standards Observers** will ensure that their watches are synchronised with **Official Timekeepers** time and any written report submitted should clearly state the official time that any alleged infringement of driving standards occurred.

3.4. The **Driving Standards Observer** is responsible for the reports of driving standards as outlined above but should not personally become involved in dealing with any actual incidents.

4. Marshals

4.1. **Marshal**s (**Ch.5 Art.20.4**) shall patrol between the course and all unfenced **Enclosure**s. Those stationed outside the pits or paddock or **Enclosure**s.Should be warned to remain behind protective barriers in the event of an impending incident.

4.2. **Marshal**s shall be briefed on their duties and wear no clothing the colour of which might be confused with **Signals** by light panels and / or flags where applicable.

CHAPTER 12 RACE

Appendix 4 - Organisers' Regulations and Restrictions

This Appendix must be read in conjunction with the relevant provisions of Chapters 2-11 inclusive.

Specific **Regulations** apply to **Truck Racing** and must be obtained from the **ASN**.

1. General

1.1. All **Competitor**s and **Officials** must **Sign On** at all **Event**s they participate in.

1.2. **Competitor**s must produce the necessary credentials of personal and **Vehicle** eligibility at all times on demand of the **Officials** of the **Event**.

1.3. **Competitor**s must have the correct grade of **Licence** for the **Event** and the **Vehicle** being driven (see **Licence** Restrictions at Arts.6.2 and 6.3 below).

1.4. All competing **Vehicles** and / or **Competitor Personal Safety Equipment** (Ch.9) must be presented for scrutiny on command of the **Officials** of the **Event** including any specific arrangements for safety and / or eligibility **Scrutineering** mandated by the **Official Documents** and / or any conditions of **Entry** and **Signing On**.

1.5. Any false declaration by a **Competitor** in relation to the eligibility of a competing **Vehicle** and / or any **Competitor Personal Safety Equipment** must be reported to the **Clerk of the Course** and to the **ASN** by the **ASN Steward** of the **Event** (where applicable).

1.6. **Vehicles** approved by the **Scrutineer**s shall be issued with a **Scrutineering Label** to be placed in / on the **Vehicle** in a location visible to an **Official**.

1.7. **Organiser**s must provide a designated area for vehicle scrutiny and ensure that suitable secure facilities exist for the retention of **Vehicles** involved in **Serious Incidents**.

1.8. Medical facilities and / or arrangement including suitable **Rescue Vehicles** must be provided in accordance with App.5 to this Chapter and Ch.11.

1.9. Prior to **Practicing** and / or qualifying for the **Competition** at the **Event** a **Driver** who has not raced at the **Circuit** in the configuration being used for the **Competition** must report to the **Clerk of the Course** or a **Deputy** who will specifically brief the **Driver** before they start **Practice**.

1.10. Unless authorisation has been granted by the **ASN** there shall be no **Race** (or **Practice** for a **Race**) which combines **Vehicles** with exposed wheels with closed **Vehicles** (i.e. saloons etc.).
This regulation shall not apply to any **Race Vehicles** of periods A to D or to races for **Vehicles** of periods E and F providing that such a **Race** does not include any single seat, open wheeled **Vehicle** with a height of less than 33in.

1.11. In wet conditions every effort should be made to clear any accumulations of water from the **Track** even if this means delaying the start. **Driver**s must be permitted to complete at least one familiarisation lap prior to the **Race** if conditions have changed from dry to wet since **Practice**.

2. Restrictions on Organisers General

2.1. A permit for the organisation of a race **Event**, championship or series is issued at the sole discretion of the **ASN** and on the condition that:

a. A valid **Track Licence** exists for the **Circuit** and its conditions are fulfilled (Ch10 App.1 Art.1).

b. No paying public spectators are allowed to be present if the **Organising Club** has not organised a **Race Event** within the preceding three years. In certain circumstances the **ASN** may waive this requirement.

c. The appropriate local hospital authorities have been notified as to the time and date of the **Event**, including **Practising**.

d. **ASN Timekeeper**s, **Handicapper** (if appropriate) and **Scrutineer**s appropriate to the grade of **Event** have been appointed.

e. Dual status **Permit**s may be issued where one or more of the **Race**s at an **Event** are to be open to holders of a lower grade of **Licence**.

2.2. A **Permit** will not be issued for **Car Race Event**s of **International** status unless the **Club** possesses a fulltime Secretariat capable of taking full responsibility for the **Event**. The application must be specifically approved by the **ASN** prior to submission to the **FIA**.

2.2.1 Unless authorisation has been granted by the **ASN** there shall be no **Race** (or **Practice** for a race) which combines **Vehicles** with exposed wheels with closed cars (i.e. saloons etc.). This regulation shall not apply to any **Race Vehicles** of periods A to D or to races for cars of periods E and F providing that such a **Race** does not include any single seat, open wheeled car with a height of less than 33in.

2.2.2 In wet conditions every effort should be made to clear any accumulations of water from the track even if this means delaying the start. Further, drivers must be permitted to complete at least one familiarisation lap prior to the race if conditions have changed from dry to wet since **Practice**.

2.3. No racing or **Practice** may take place until:

a. The **Chief Medical Officer** has reported to the **Senior Clerk of the Course** that the necessary **Doctors**/**Paramedics** mobile ambulance vehicles and first aid personnel are present and have been briefed. If no ambulance or suitable substitute **Vehicle** is available at the **Event** the **Competition** or **Practice** must be suspended (Ch.11).

b. The **Stewards of the Event** have seen the Fire Equipment **Certificate** referred to in Ch.10 App.4 Art.3.

c. The **Clerk of the Course** has reported to the **Stewards of the Event** that the conditions of the **Permit** and **Track Licence** are fulfilled. Before making such a report the **Clerk of the Course** or a **Deputy** appointed by the **Clerk of the Course** specifically for such purpose shall inspect the course and its installations.

d. The **Clerk of the Course** is sure that breakdown vehicles are present in sufficient number to cope with any incidents which may be expected having regard to the type of course and number of **Competitor**s.

e. The **Clerk of the Course** is satisfied that the licensed **Rescue Vehicle**(s) are positioned in accordance with the **Track Licence**.

f. The **Clerk of the Course** is satisfied that the **Competitor**s for the relevant session have **Signed On**.

2.4. No **Vehicle** other than a competing **Vehicle** shall be taken on to the course during a **Competition** except to deal with a grave emergency and then only as instructed by the **Clerk of the Course** who must be satisfied that the **Driver** of such a **Vehicle** knows the operating status of the track and that **Flag Marshal**s will warn competing **Driver**s.

2.5. The **Course** or its features or markings may only be changed between the last **Practicing** period and the **Race**(s) in exceptional circumstances.

2.6. The **Clerk of the Course** in consultation with the **Stewards of the Event** may arrange an additional scheduled **Practice**.

2.7. If the **Organiser**s arrange to display signs to **Competitor**s indicating the progress of the **Race** these **Signal**s will show the number of laps remaining unless any **Official Document** from the **Clerk of the Course** indicates otherwise.

3. Endurance Racing Specific Provisions

* Indicates maximum figures that may be reduced in the **Official Documents**.

3.1. **Endurance Race**. A **Race** scheduled to have a minimum of 90 minutes duration with refuelling permitted and/or **Driver** stops and/or **Driver** changes as an integral part of the **Race**.

3.2. **Endurance Race**s should be started by **Rolling Start** unless otherwise stated in the **Official Documents**.

3.3. There is no restriction on the maximum number of **Driver**s for each **Vehicle**.

3.4. *A **Driver** may not drive for more than 3 hours in any 5-hour period.

3.5. For races over 6 hours any one **Driver** must not exceed 60% of the scheduled **Race**.

3.6. A **Driver** may drive a maximum of 2 **Vehicles** during the **Event** provided that **Driver** is properly entered and qualified in each **Vehicle**.

3.7. To be classified in the results of an **Endurance Race** a **Competitor** must have completed at least a minimum of 50% of the race duration completed by the winner unless otherwise specified in the **Championship Regulations**.

4. Specific Provisions relating to Scrutineering

4.1. At least 25% of **Competitor**s and **Vehicles** must be presented for scrutiny when requested as specified in the **Official Documents**. Any **Scrutineering Label** relating to a previous **Event** must be removed before presentation of the **Vehicle** for scrutineering. Homologation papers must be presented when appropriate.

4.2. All **Competitor Personal Safety Equipment** must comply with Ch.9).

4.3. Any **Competitor** not reporting as instructed may be fined or Disqualified (see Ch.2).

4.4. **Vehicles** competing in **Race Event**s must comply with App. 13 to this Chapter and Ch.7 and any appropriate **Approved Formula Regulations**.

4.5. No **Vehicle** requested to be presented at **Scrutineering** may be driven in the **Event** until it has been approved by an **ASN Licensed Scrutineer** of the **Event** for safety and eligibility.

4.6. If after approval for an **Event** any **Vehicle** is dismantled or modified in a manner which may affect its safety or eligibility or is involved in any incident which is likely to have a similar effect or is driven in **Practice** or **Competition** at another **Event** it shall be represented for approval. The **Entrant** is responsible for seeking such fresh approval.

4.7. In the event of an accident or collision occurring during a **Race** or **Practice**, the **Vehicle** or **Vehicles** involved may be required to halt for examination.

4.8. A **Vehicle** involved in an Incident and which is rendered unable to proceed or where any person is injured must not be touched by any person other than **Officials** without the specific approval of the **Clerk of the Course.** The **Driver** concerned may not **Race** again without the approval of the **Chief Medical Officer**.

4.9. No **Vehicle** taking part in a **Race** may be taken away from the **Circuit** before the final technical checks have been concluded for that **Race**(s) and **Vehicles** released from **Parc Fermé** without the prior authority of the **Chief Scrutineer** who will report such to the **Clerk of the Course**.

4.10. No **Vehicle** should compete in more than four consecutive **Event**s without being physically scrutineered.

4.11. **Vehicle Identification Stickers** (Ch.7 App.1 Art.1.11) and **Event Scrutineering** records (Ch.7 App.1 Art.1.12) may be required for **Vehicles** competing in **Race Event**s.

Radios and the transmission of electronic signals

4.12. **Vehicles** will be permitted to carry radio transmitters or receivers for which Ofcom licences where required will be checked at scrutineering in the following races only:

a. International status Races and National (non-Historic status) Championship Races where permitted within Championship Regulations.

b. **Race**s which involve a **Driver** change

c. Where the **Competitor** has an **ASN** approved information system tuned to the frequency of a transmitting device which is under the direct and sole control of the **Clerk of the Course** or **Chief Timekeeper**. The system is to be used solely for providing **Competitor**s with timing data issued by the **Chief Timekeeper** and/or electronic **Signal**s, instructions or warnings issued on the instruction of the **Clerk of the Course**.

d. If a frequency used by a **Driver** / **Team** / manufacturer / constructor and / or any of their suppliers ('**Participant**') interferes with a frequency used by a local service or **Event Officials** or another third party the **Participant** concerned may be required to change its radio frequency to a non-conflicting frequency to the satisfaction of the **Officials** of the **Event** and in accordance with the requirements of Ofcom. The **Participant** may be suspended from testing and **Qualifying** and **Racing** until a change of frequency has been provably effected.

e. **Race**s where **Spotters** are permitted.

4.13. No signal of any kind may pass between a moving **Vehicle** and anyone connected with the **Vehicle**'s **Entrant** or **Team** or **Driver** save for the following:

a. Legible messages on a **Pit Board**

b. Body movement by the **Driver**

c. Verbal communication between a **Driver** and **Team** by means of radio using an approved frequency subject to Art.4.12 above.

d. **Lap Trigger Signal**s as provided below at Arts.4.14 and 4.15.

e. **Timing Data** in accordance with Art.4.16 below.

4.14. **Lap trigger signals from the Pits to the vehicle:** **Lap** marker transmitters must be battery powered and when operating must be free standing (not attached to any other pit equipment by means of wires or optical fibres) and incapable of receiving external information. Such lap triggers shall use a transmitter operating with a carrier frequency above 10Ghz (radio or optical) and a beam half angle of no more than 36° when measured at the 3dB point and shall not be used for the transmission of any data from the pit to the **Vehicle** other than the lap mark.

4.15. **Lap** mark data must be transmitted repeatedly and must be demonstrably consistent.

4.16. A single burst of **Timing Data** from the **Vehicle** to the **Pits** as the **Vehicle** passes the receiver. All timing beacons and receivers must be a minimum of 10m from any official timing beam.

4.17. Mobile phone or tablet devices are prohibited from being carried in the competing **Vehicle** whilst on the **Circuit**.

5. Vehicle Competition Numbers and Identification (Ch.7 App.10)

5.1. **Vehicles** will be identified by means of a competition number allocated by the **Organiser**s and displayed as specified in Ch.7 App.10. The use of "0" or "00" is prohibited unless preceded by any number 1 to 9.

5.2. The numbers shall be in position before the vehicle is presented for scrutiny and will be subject to approval as to position legibility and size. Modifications may be required as a result of observations during **Practice**.

5.3. **Competition** numbers must be always covered when driving on the **Public Highway**.

5.4. The **Chief Timekeeper** may decline to record the performance of any vehicle whose competition numbers are not readily apparent to the **Timekeeper**s.

5.5. On any **Vehicle** (except Trucks) driven by a person who has not received six **Car Race** signatures on their **Club Licence** a yellow square not less than 175mm square with a black diagonal cross with strokes not less than 150mm long and 25mm wide must be visibly positioned on the rear of the **Vehicle**.

5.6. The **Organiser**s may in addition to the number format provided in Ch.7 App.10 also permit **Competition Numbers** to be moved to the rear side windows (above the drivers' name) on the **Vehicle** in which case:

5.7. The numbers for each rear side window must be:

a. a minimum of 200mm high and

b. with a stroke width of at least 20mm and

c. coloured reflective yellow.

5.8. In addition the windscreen of these **Vehicles** must display the **Competition** number positioned on the upper area of the **Passenger**'s side of the windscreen as follows:

a. the numerals must be at least 150mm high and

b. be in the same colour and font as those displayed on the rear side windows and

c. be placed no closer than 50mm from the lower edge of the windscreen "sun-strip" and 50mm from the side edge of the windscreen.

6. Licence Restrictions

See Ch.6 App.5.

6.1. Any **Driver** competing in a **Single Seat Racing Car** 0.5bhp/kg or greater (excluding **Driver** weight) must be the holder of a **Race National Licence** as a minimum except for a **Championship** which has been authorised by the **ASN** to set an alternative qualification.

6.2. Any **Driver** competing in a **Vehicle** of 0.34bhp/kg or higher (excluding **Driver** weight) and measured at the driven wheels except for single seaters as detailed above must be the holder of a **Race National Licence** as a minimum.

Parade, Lead/Pace and Safety Car Specifications.

7. Safety Car

7.1. A **Safety Car** may be used to control or neutralise a race in the event of an incident or a situation in which **Marshals** or **Competitors** are being subjected to such potential danger that the yellow flag is not sufficient protection, providing its use is detailed in SRs, or the **Championship Regulations**, and in accordance with App.2. The Safety Car will also be used whilst a snatch is in operation at those venues not licensed for snatch operations.

7.2. When selecting a **Vehicle** for use as a **Safety Car** consideration should be given to the vehicles suitability, and type of vehicles within the race (**Convertible** vehicles are not deemed suitable).

7.3. The **Safety Car** should be marked "**Safety Car**" in black letters on a white background (in letters of a similar dimension to those used for race numbers) on both sides of the vehicle and in letters as large and as a clear as is practicable on the rear of the vehicle in such a way that the purpose of the **Safety Car** is clear and unambiguous.

7.4. The **Safety Car** must be equipped with a minimum of two yellow/amber flashing lights securely situated on the roof of the vehicle. The vehicle must be equipped with safety belts.

7.5. It is recommended that **Safety Cars** be equipped with rollover protection and have fitted a 2.5kg fire extinguisher to be at the disposal of the driver or observer, for hand use.

7.6. It is recommended that **Safety Cars** have the decals removed or covered when on the public highway, and are driven in such a manner as not to bring the sport into disrepute.

7.7. The driver and observer must sign on as officials of the **Event**.

7.8. No other personnel may be carried aboard the vehicle.

7.9. Helmets must be worn, but they must not impede communications between the observer and the driver or race control, (wearers of full-face helmets should use in-ear ear pieces).

7.10. Both the driver and observer must have arms and legs covered with suitable clothing (fire retardant overalls are strongly recommended).

7.11. Safety belts as fitted to the vehicle must be worn.

8. Lead Car

8.1. A **Lead Car** may be used to control the formation lap prior to a rolling start (App.6 Art.7.1.b). A **Lead Car** will not be used to neutralise a race.

8.2. The Lead car should be marked “LEAD CAR” in black letters on a white background (in letters of a similar dimension to those used for race numbers) on both sides of the vehicle and in letters as large and as clear as is practicable on the rear of the vehicle in such a way that the purpose of the **Lead Car** is clear and unambiguous. **Safety Cars** may also act as **Lead Cars**.

8.3. The **Lead Car** must be equipped with a minimum of two yellow flashing lights situated on the roof of the vehicle.

8.4. The **Lead Car** must be driven as required by Ch.5 PART A App.5 Art.1.3.r and crewed with an official acting as an observer who is capable of recognising all the competing cars and who is in permanent radio contact with **Race Control**.

8.5. Both the driver and the observer must have signed on as **Officials** of the **Event**.

8.6. Helmets must be worn, but they must not impede communications between the observer and the driver or race control, (full-face helmets may require intercoms).

8.7. It is recommended that **Lead Cars** have the decals removed when on the public highway and are driven in such a manner as not to bring the sport into disrepute.

9. Parade Car

9.1. A **Parade Car** may be used to control the formation lap prior to a standing start (12.1(a)).

9.2. A **Parade Car** is deemed to be a vehicle used only to lead the competing cars on their green flag/formation lap, when the start is to be a conventional standing start from the grid, and which will not be used to neutralise a race. **Lead Cars** and **Safety Cars** may also act as **Parade Cars**.

9.3. The **Parade Car** must have at least one yellow flashing light situated on the roof of the vehicle.

9.4. The **Parade Car** must be driven as required by Ch.5 PART A App.5 Art.1.3.r and crewed with an **Official** acting as an **Observer** who is capable of recognising all the competing cars and who is in permanent radio contact with **Race Control**. Both the driver and the observer must have signed on as **Officials** of the **Event**.

9.5. It is recommended that **Parade Cars** have the decals removed or covered when on the public highway and are driven in such a manner as not to bring the sport into disrepute.

CHAPTER 12 RACE

Appendix 5 - Incidents, Medical Facilities and Emergency Rescue

1. Serious Incidents

1.1. All **Serious Incidents** must be reported to the **ASN** and managed in accordance with the published **ASN Incident Pack** and **Protocol**s.

1.2. The **ASN Steward**s must ensure that the **ASN Incident Pack** is present with the **Event Official Document**ation available to the **Clerk of the Course**.

2. Incidents

2.1. The **Clerk of the Course** shall ensure that after every incident involving a competing **Vehicle** or **Vehicles** the following are informed:

a. **The Chief Scrutineer:** where mechanical failure is suspected, mechanical damage is substantial, or the completion of a serious incident form is necessary

b. **The ASN Steward of the Event:** where there is injury involving treatment beyond the capability of the **Venue** staff (see Art.1) or where judicial action is possible or has been taken.

2.2. No **Vehicle** or **Driver** involved in a Serious **Incident** shall be permitted to continue in the **Competition** nor leave the **Venue** without the prior approval of the **Chief Scrutineer** or the **Chief Medical Officer** as the case may be. Full details of such approval must be provided to the **Clerk of the Course** and must be delivered in the **Steward**'s **Report** to the **ASN**.

2.3. At the conclusion of each **Race** each **Post-Chief** shall report any incidents to the **Clerk of the Course**. **Post-Chief**s will also pay attention to driving standards and report to the **Clerk of the Course** any perceived breaches.

2.4. Live "snatch" is prohibited for:

a. single seaters; and

b. open sports cars without a full roll cage; and

c. during hours of darkness.

2.5. At **Race Circuit**s not licensed for the use of "snatch" the recovery of a **Vehicle** creating an obstruction or hazard can only be carried out once the **Race** has been neutralised by **Safety Car**, Full Course Yellow or Code 60 unless recovery is executed manually.

a. Where recovery can be undertaken manually by **Marshals** this will be undertaken in the usual way covered by yellow signals in accordance with Ch.12 App.8 Art.1.8.

3. Medical Arrangements, Emergency Rescue Vehicles and Equipment (Ch.11)

3.1. At all permanent **Circuit**s there shall be a medical centre equipped in accordance with the current **ASN Medical Centre Protocol**.

3.2. The appropriate number of **Doctors, ASN Registered Paramedics** and **Ambulance**s must be present throughout **Practice and Racing** located in accordance with the **Track Licence**.

3.3. Provided that the basic minimum of one **Doctor** is complied with the remaining posts shall be filled with either **ASN Registered Paramedics** (Ch.11) or **Doctors** appointed to the **Event** at the sole discretion of the **Chief Medical Officer**.

3.4. At all **Race Event**s at least one licensed **Rescue Vehicle** and crew must be in attendance and should be positioned as indicated on the **Track Licence**.

CHAPTER 12 RACE

Appendix 6 - Competition Regulations

This Appendix must be read in conjunction with the relevant provisions of Ch.5 **Officials**.

1. Handicapping

1.1. Any handicap will be based on the **Handicapper**'s estimate of the potential performance of the **Vehicles** entered. Speeds achieved during **Practice** will be used as a guide – unless some other basis is advised in **Official Document**s.

1.2. A handicap may be modified after initial publication but a finalised list of handicaps should be published at least 30 minutes prior to the start of a **Race**.

1.3. In the case of races in which the handicap is wholly or partly based on **Practice** times a **Driver** who in any lap improves their best **Practice** lap time by more than 5% may be disqualified by the **Clerk of the Course**. This penalty may be waived if the **Handicapper** advises the **Clerk of the Course** of any extenuating circumstances.

1.4. For handicap races the handicap shall be so arranged by the allocation of credit laps that all **Vehicles** will have left the starting area before the limit **Vehicle** has completed its first lap. **Vehicles** due to start at different times should not be placed in the same row on the starting grid.

2. Timing

2.1. The completion of the first and subsequent laps shall be timed when each **Vehicle** crosses the control line unless the **Official Document**s state otherwise.

2.2. At all times throughout the **Event** competing **Vehicles** shall be fitted with a working timing identification module (i.e transponder). This must be compliant with the **Timekeeper**'s equipment. The module identification number should be submitted to the **Event Secretary** on the **Entry** form. It is the responsibility of the **Competitor** to ensure that the module is working and safely fitted in a suitable position on the **Vehicle**. Failure of the module may result in the competing **Vehicle** being untimed.

2.3. Where for whatever reason timing is carried out manually the timing of a **Vehicle** crossing a control line shall be taken at the moment when the centre of the leading wheel(s) pass(es) over that line.

2.4. Transponder only timing must not be to an accuracy of less than 0.01 seconds.

2.5. Transponders must be from the **ASN** approved list and used in conjunction with decoders certified in accordance with Ch.5 App.18 Chart.6.

2.6. The fitment of the transponder must be in accordance with the manufacturer's instructions at a predetermined position on the **Vehicle** as detailed in the **Official Document**s.

3. Practice

3.1. Every Driver including Drivers of Vehicles which are to give performance demonstrations must be given the opportunity of practicing in conditions similar to those to be expected in the Competition and any Driver who has not previously raced over the course in its current configuration within the preceding 24 months must complete at least three Practice laps in the Vehicle to be raced by the Driver during which the Driver shall satisfy the Clerk of the Course as to their competence. Drivers must be given at least the following opportunity for Practicing:

3.2. **Organiser**s will provide a period sufficient to allow at least three laps of **Practice** in the prevailing conditions.

3.3. It is recommended to schedule a period of 10 minutes of **Practice** if the **Track** is less than one mile in length or 15 minutes for a track between 1 mile and 2.5 miles and 20 minutes for tracks over 2.5 miles.

3.4. **Organiser**s will provide a separate **Practice** session for each **Race, Championship** or **Series** (unless the **Official Document**s state differently). **Vehicles** practicing entirely out of session will be placed at the back

of the grid without the addition of a time delay except where grid positions have been made in accordance with Art.5.3.b, c, d, e, or f below. If more than one **Driver** is subject to this rule then starting positions shall be determined by the **Clerk of the Course**. Qualified reserves shall however enjoy precedence over **Competitor**s practicing entirely out of session or whose **Practice** times have been disallowed for whatever reason including **Vehicle** eligibility.

3.5. **Driver**s whose best lap time exceeds by more than 10% that of the third fastest **Vehicle** within its class (where similar weather conditions prevailed) may be disqualified at the discretion of the **Clerk of the Course**.

3.6. During **Practising** the number of **Vehicles** on the course shall not exceed the number permitted in a race by more than 20% unless the **Track Licence** specifies otherwise (Ch.10 App.1 Art.4.2–4.3).

4. Heats

4.1. A **Competition** may be run in **Heats** the composition of which and of the **Final** will be determined by the **Organiser**s and published in the **Official Document**s. The composition of the **Heats** may be modified or heats consolidated only by the **Clerk of the Course** after consultation with the **Championship Co-ordinator** if appropriate.

4.2. **Start**ing positions in the **Final** will be determined by the finishing times recorded in each **Heat** unless the **Official Document**s specify otherwise.

4.3. A **Driver** must drive the same **Vehicle** in the **Final** as in the **Heats**.

5. Starts

5.1. Each **Vehicle** shall have an allotted position at the start in accordance with Art.5.3 below.

5.2. **Official Document**s must specify:

a. the method of determining starting positions

b. the maximum number of starters in each race.

5.3. **Starting positions will be determined by:**

a. **Practice** times or

b. handicap or

c. finishing order in a preceding race or

d. selection made with the object of placing the fastest **Driver** at the front or

e. current positions in a **Championship** or

f. ballot when the method must be specified in writing in **Official Document**s.

5.4. **When starting positions are determined by Practice times:**

a. Only those times established by a **Driver** in the **Vehicle** correctly numbered, eligible and driving in the **Race** will be recorded. (Unless authorised by **Official Document**s 'spare' **Vehicles**' are not permitted.)

b. All **Vehicles** in an **Event** must be given the opportunity to take part in the same **Practice**.

c. Any flying lap time recorded in a correct **Practice** session will be taken into account in determining grid positions even if the remainder of the qualifying laps are completed 'out of session'.

5.5. Any **Driver** or **Vehicle** which has had all their **Practice** times disallowed but remains eligible to compete will be placed behind the rear line of the normal starting grid and will not start when the normal starting signal is given.

a. Such **Driver**s will be given a starting signal 10 seconds later.

b. This delayed start cannot be applied retrospectively.

c. For the purpose of calculating times or speed the normal starting signal will be used.

d. If more than one **Driver** is subject to this rule then starting positions shall be determined by the **Clerk of the Course**.

e. For races with a rolling start such **Competitor**s will start from the pit lane after all the other **Vehicles** have started.

5.6. Within the provisions of Art.3.4–4.3 and / or 5.4 of this Appendix the lowest **Practice** time will be considered the most meritorious and the **Driver** and **Vehicle** concerned given the pole position at the start with other **Driver**s and **Vehicles** arranged in order of the times recorded.

5.7. When identical times are recorded by more than one **Driver** in the official **Practice** session for that race the **Driver** first setting such a time will receive the better starting position.

5.8. In addition if the **Track** conditions have changed from dry to wet since **Practice Driver**s will be permitted one additional reconnaissance lap prior to the race. **Driver**s will be notified accordingly before they leave the assembly area or pit lane whichever is applicable.

5.9. Any **Competitor** who is on the **Track** at the time of showing the one-minute board or who is allowed to join the race with the permission of the **Clerk of the Course** is defined as coming under starter's orders and is therefore deemed to be a starter.

5.10. A non-starter is any **Competitor** who does not fulfil the criteria specified in Art.5.9 above.

6. Starting:

6.1. There are two methods of starting. The **Official Document**s must state the method to be used:

6.2. **Standing start:** A standing start occurs when the **Vehicles** are stationary on their appropriate grid positions with engines running when the starting **Signal** is given. **Timing** shall commence when the starting **Signal** is given. The starting line is the line in relation to which the position of each **Vehicle** is fixed prior to the start.

6.3. **Rolling start**: A rolling start occurs when the **Vehicles** are moving at the moment the starting **Signal** is given. To achieve a rolling start the **Competitor**s may be led by a Pace **Car** until the starting **Signal** is given. All rolling starts must be in a 2 x 2 or 1 x 1 grid formation. The start line is the line on the crossing of which the timing commences.

6.4. The **Start Grid** shall be notified at least 30 minutes before the start except when the finishing order in one **Event** affects the starting positions in a subsequent **Event** scheduled to start less than half an hour later. In such instance the starting positions shall be notified as soon as practicable.

a. The **Start Grid** will be displayed on the **Official Notice Board**.

b. Any appeal concerning starting positions must be lodged within 30 minutes of their notification. Where the exception given in Art.6.4 above. applies any appeal must be lodged not less than 10 minutes before the subsequent start.

c. Each **Vehicle** will be allocated its pre-determined position on a starting grid. It will be the responsibility of the **Driver** to place their **Vehicle** in the correct position unless instructed not to do so by an official specifically appointed to control the start.

d. It is not permitted to change tyres between leaving the assembly area and the start of the race except in the case of **Force Majeure** (puncture or obvious damage) or if the **Clerk of the Course** states that the **Track** is not completely dry. No artificial tyre heating or heat retaining devices may be used during this period.

e. The pit exit will be closed 30 seconds after the last able **Vehicle** of the assembled **Vehicles** leaves the entry point on to the **Circuit** and after this time any **Vehicles** and **Driver**s exiting the assembly area will be required to start from the pit lane after the last **Vehicle** has passed the pit lane exit at the start of the **Race**. Once the countdown has commenced any **Vehicle** still in the pit lane or assembly area must start at the back of the field at the commencement of the green flag lap or **Race** start whichever

timing is appropriate as deemed by the **Championship Regulations** or the **Clerk of the Course**.

6.5. Visual warnings will be displayed as per **Official Document**s. Visual warnings may be supplemented by sound signals.

6.6. If through unforeseen circumstances the formation lap cannot commence at the appointed time after the display of the one-minute signal **Driver**s will be notified by display or a "**Start** Delayed" board. Engines may then be stopped but only on the instructions of the **Clerk of the Course**.

6.7. If a "**Start** Delayed" **Signal** is given the starting procedure will be recommenced by the display of the one-minute warning and so on.

6.8. For all races with a countdown of three minutes or less **Officials** and **Driver**s are the only persons allowed on the grid.

6.9. For all starts the **Driver** will be seated in the **Vehicle** and engines will be running.

6.10. Unless the **Official Document**s specify that engines must be stopped on arrival at the starting grid no penalty will be applied for failing to stop engines. Engines not already running will be started at the one-minute signal and the method of starting shall be in accordance with the appropriate **Technical Regulations**.

6.11. Any **Driver** in position on the grid but unable to take part in the start shall indicate that predicament by raising an arm vertically or opening the door. **Marshal**s should warn other **Driver**s by means of a **Yellow Signal**. These **Vehicles** will be started after the **Competitor**s have left the grid.

6.12. For all categories of **Vehicles** that allow slick tyres to be used the start will be preceded by a formation lap.

a. Following the showing of the 30 second **Signal** the starter will release the **Vehicles** by displaying a green **Signal**.

b. The **Vehicles** will keep in grid formation for this lap and the pace will be set by the pole position **Driver**.

c. No **Practice** starts may be executed during the course of this lap.

d. At the end of this lap the **Vehicles** will return to their grid positions and stop with their engines running.

6.13. A five second board will be used to indicate that the grid is complete then approximately 5 seconds after this board is withdrawn the red lights will be switched on and between a further 2 to 7 seconds the red lights will be extinguished to indicate the start of the race.

6.14. The order to start will be given by signal lights or a starting flag:

a. **Red** lights being extinguished for both a standing start and rolling start

b. Downward movement of the **National Flag** where the use of start lights is not possible. All **Competitor**s must be briefed on this method of starting when this is not the usual procedure.

6.15. A grid may be formed in two parts allowing the first part of the grid to be started in advance of the second.

a. The signal lights or starting flag will be used to start the first part and the second part started by use of a starting flag alone.

b. For any **Circuit** up to and including 2 miles in length a time delay of 10 seconds is mandatory to separate the grid.

c. For any **Circuit** over 2 miles in length the time delay between the two grids will be no less than 10 seconds and no more than 20 seconds.

d. All **Competitor**s must be made aware of this start procedure through the **Official Document**s whenever this method of starting is used.

e. Following release of the first part of the grid should an obstruction for the second **Race** start appear the **Race** must immediately be red flagged.

6.16. A second **Race** of the same status may run concurrently but only from a single start up to the maximum number permitted by the **Track Licence**.

a. At the end of the specified duration of the shorter race all **Competitor**s will be **Signalled** by the display of a white board measuring at least 800mm x 600mm with a chequered border and bearing the legend '**Race** Part One End'.

Upon display of this signal the shorter race **Competitor**s must safely enter the pit lane ensuring that they do not impede those **Vehicles** which are continuing to race for the longer period.

The timing of **Vehicles** in the shorter race will conclude when the final **Competitor** in this shorter race passes the board on the finish line.

b. There must be a minimum of 30 minutes between the end of each **Race** for **Endurance Race**s and no less than 15 minutes for any other **Race**s.

c. No **Vehicle** is eligible to compete in both **Race**s however a **Driver** competing in an **Endurance Race** may do so.

d. A **Driver**s briefing for all **Competitor**s is mandatory and the board to be used (as specified in **Art.6.16.a above**) must be shown to all **Competitor**s during the briefing.

7. False Start

7.1. A false start occurs when a **Driver** under **Starter**'s orders is either:

a. in an incorrect position on the grid or

b. forward from the prescribed position or

c. moving at the time that the red lights are extinguished or

d. in the case of a rolling start fails to maintain the correct station or accelerates early or unevenly.

8. Penalty for a False Start

8.1. Unless the **Regulations** provide for a different penalty the **Driver** concerned shall be penalised by the addition of 10 seconds to the time taken to complete the **Race**. This penalty must immediately be notified to all **Competitor**s by a signal board and to the **Driver**'s pit or representative. This penalty will not incur penalty points.

9. Stopping a Race

9.1. Any **Race** can be stopped at the sole discretion of the **Clerk of the Course** by ordering the 'waving' of the **Red Signal** at the **Start**/Finish line. **Competitor**s will be warned that the **Race** has been stopped by the simultaneous 'waving' of the **Red Signal** at all **Flag Marshal**ling **Post**s.

a. Any **Race** stopped before the leader has completed two laps will be declared a "No Contest" and available **Competitor**s will restart from their original grid positions (**Art.9.2 below** also applies).

b. **Any race stopped after the leader has completed more than two laps but less than 75%** of its duration will be considered as the first part of the race. **Competitor**s will be restarted from a grid set out in the finishing order of this first part which shall be based upon the order of crossing the finish line at one lap less than the number of laps completed by the leader at the time of first showing the **Red Signal**. Only **Vehicles** which are proceeding under their own power in accordance with **App.8 Art.1.7.j** at the showing of the **Red Signal** (**App.7 of this Chapter**) will be classified in this first part (**Art.9.1c** and **Arts.9.2–9.5 below** also apply).

c. If a race covered by **Art.9.1.b** above cannot be restarted either at that time or later during the same **Event** for whatever reason then the result will be declared applying the same principle described to produced the grid order at b. above – the order of crossing the finish line at one lap less than the number of laps completed by the leader at the time of first showing the **Red Signal**.

d. When restarted the result will be the order of finishing at the end of the restarted **Race** unless **Championship Regulations** specify otherwise. The result will list all **Competitor**s who took the start in the **Race** even if they did not take part in the restarted **Race** and will use the first part for purposes of establishing lap records and point scoring where applicable (**Arts.9.2–9.3 below** also apply).

e. **Any race stopped after the leader has completed 75%** of its duration may be considered to have finished unless the **Clerk of the Course** in consultation with the **Stewards of the Event** deems it appropriate to restart the **Race**. The result will be based on the order of crossing the finish line at one lap less than the number of laps completed by the leader at the time of the first showing of the **Red Signal**.

f. The roll back of laps is for the declaration of results. Any Track limit breaches incurred on the discounted laps will not be counted or considered in any way. Any other incident or breach of the Regulations on the discounted laps will not be invalidated and will be reviewed by the Clerk of the Course who will impose penalties as deemed necessary. Only Vehicles which are proceeding under their own power at the showing of the Red Signal will be classified (if restarted **Art.9.1.b and d. above** will apply).

9.2. In the interval between stopping and restarting the Race Vehicles may return to the pit area for repairs. Having done so they may not return to the grid but may join from the pit lane after all the other Vehicles have started.

a. Non-runners at the time of stopping must return to the pit lane and may restart from the pit lane behind those referred to above if approved to do so by a **Scrutineer**.

b. No work may be carried out on the grid unless on grounds of safety and with the approval of an **ASN Licensed Scrutineer**.

9.3. The Clerk of the Course may order that the duration of the second part or re-run of any Race shall be a shorter distance than originally scheduled or may be abandoned altogether.

a. If the first part of the Race was stopped under **Art.9.1.a** the duration of the re-run will be determined as the duration of the Race.

b. If the duration is adjusted by the Clerk of the Course the new duration shall be used for the calculation of 75% under **Art.9.1.b** and **e** above.

CHAPTER 12 RACE

Appendix 7 - Track Regulations and Driving Standards

1. General

1.1. Any **Driver** intending to leave the **Course** or to enter the pits shall **Signal** the intention to do so in good time and be satisfied that it is safe to do so.

1.2. The **Driver** of any **Vehicle** leaving the **Track** because of being unable to maintain racing speed should **Signal** the intention to do so in good time and is responsible for ensuring that the manoeuvre is carried out safely and as near as possible to a point of exit.

1.3. Should a **Vehicle** stop somewhere other than in the pit lane it must be moved as soon as possible so that its presence does not constitute a danger or hinder other **Driver**s. If the **Driver** is unable to move the **Vehicle** marshals may assist. If such assistance results in the **Driver** re-joining the **Race** this must be done without committing any breach of the **Regulations** and without gaining any advantage.

1.4. No **Vehicle** able to proceed under its own power shall be stopped either on the **Track** or the verges of the course but shall proceed to the pits or paddock unless in doing so causes a hazard to other **Competitor**s.

1.5. A **Vehicle** alone on the **Track** may use the full width of the **Track**.

a. However as soon as it is caught by a **Vehicle** which is about to lap it the **Driver** must allow the faster **Driver** past at the first possible opportunity.

b. If the **Driver** who has been caught does not seem to make full use of the rear-view mirrors **Flag Marshal**s will display blue **Signal**s to indicate that the faster **Driver** wants to overtake.

c. Any **Driver** who appears to ignore the blue **Signal**s will be reported to the **Clerk of the Course**.

d. Overtaking according to the circumstances may be carried out either on the right or on the left. In response to each attempted overtaking manoeuvre no more than one change of direction to defend a position is permitted.

e. Any **Driver** moving back towards the racing line having earlier defended position off-line must leave at least one **Vehicles** width between their own **Vehicle** and the edge of the **Track** on the approach to the corner.

f. Manoeuvres liable to hinder other Drivers such as crowding of a Vehicle beyond the edge of the Track or any other abnormal change of direction are strictly prohibited.

g. Any **Driver** who appears guilty of any of the above offences may be reported to the **Clerk of the Course** and penalised.

1.6. **Driver**s must use the **Track** at all times and may not leave the **Track** without a justifiable reason. For the avoidance of doubt:

a. The white lines defining the **Track** edges are considered to be part of the **Track**.

b. A **Driver** will be judged to have left the **Track** if any part of the contact patch of the tyre of the **Vehicle** goes beyond either the outer edge of any kerb or the white line where there is no kerb in accordance with **Diagram 1**.

Diagram 1

1.7. Should a **Vehicle** leave the **Track** for any reason and without prejudice to **Art.1.8 below** the **Driver** may re-join. However this may only be done when it is safe to do so and without gaining any advantage.

1.8. Causing a collision and / or repetition of serious mistakes or the appearance of a lack of control over the **Vehicle** (such as leaving the **Track**) will be reported to the **Clerk of the Course** and may entail the imposition of penalties up to and including the **Disqualification** of any **Driver** concerned.

1.9. It is not permitted to drive any **Vehicle** unnecessarily slowly or erratically or in a manner deemed to be potentially dangerous to other **Drivers** at any time.

1.10. Breaches of **Art.1.6 above** may be reported and/or determined only by:

a. A duly appointed **Judge of Fact** and/or

b. **Senior Officials** through the use of suitable equipment under the control of the **Organisers.**

1.11. Breaches of **Art.1.6 above** may be penalised as follows:

a. In qualifying the lap on which the breach occurred should be disallowed. Note should be made on the **Results** of any times disallowed.

b. During **Races** the following scale of **Penalties** will be applied:

1st breach –	no **Penalty**
2nd breach –	warning **Signal**
3rd breach –	a 5 second Time Penalty added to **Race** time
4th breach –	a further 10 second Time Penalty added to **Race** time
5th breach –	**Drive Through (App.10 Art.2.l)** Penalty in addition to the preceding Time Penalties
6th breach –	Black **Signal**

Care should be taken to ensure that all Signals (digital board or light panel or flag) must have been displayed to the Driver concerned before moving up the penalty scale. All penalties applied must be noted on the Results.

1.11.1 **Championships** with **Races** of 40 minutes or more may vary the above **Penalties** in consideration of **Driver** changes and/or **Race** duration. These specific **Penalties** must be defined in the **Championship Regulations** and will be subject to prior **ASN** agreement.

1.11.2 The above 5 and 10 second penalties that have been imposed during a Race may be reviewed (**Ch.5 Part A App.5 Art.2.3.i**) by the Clerk of the Course in exceptional circumstances using on-board video that has remained fully under the control of the Organisers and was not available during the Race, following which they may determine whether the time Penalty / penalties be rescinded or not. No other Penalty may be reviewed and there is no Right of Appeal against the decision of the Clerk of the Course in this matter.

1.12. No competing **Vehicle** shall be driven in the reverse direction of the **Track** except for the minimum distance to remove it from an unexpected situation and then only under official supervision.

Appendix 8 - Signals by Light Panels and Flags

1. The following regulations apply to Circuit racing

1.1. **Light** panels and / or flag **Signals** shall be in accordance with the following. At venues where light panels are operational these light **Signals** will take priority and may be supplemented with flags:

1.2. Each **Marshals** post shall be provided with a hazard area board and the following **Signals** either via a light panel control box or flags:

a. **Yellow**

b. **Yellow** and **Red**

c. Green

d. Blue

e. **Red**

f. White and

g. **Purple** (if specified in the **Official Document**s)

and shall be staffed by **Marshals** who are competent in their use.

1.3. **Officials' Signals** will be conveyed to **Drivers** and may be displayed either by light panel and/or flags to which the **Competitor** number may be attached. The **Clerk of the Course** shall be provided with or have under their direct control:

a. a **Red Signal**

b. a **Black Signal**

c. a **Black and White Signal** split diagonally and

d. a **Black Signal** with an **Orange Disc**

e. The means for clearly displaying a competing **Vehicle** number in the case of b. to d. above. Where available a digital board and/or in-car display will display messages to the **Drivers**.

1.4. The **National Flag** and a **Black and White Chequered Signal** shall be available at the start and finish line or lines for appropriate use.

1.5. All **Marshals** posts shall show a **Green Signal** during the first lap of each **Practice** session and during each formation lap.

1.6. Where light panels are being used both the red and safety car **Signals** will be operated by race control. These two **Signals** will override any local **Signals**. **Marshals** should revert to displaying yellow flags to indicate to **Drivers** the particular location of any incident hence supplementing the light panels.

1.7. **Officials' Signals** will be conveyed to **Drivers** and may be displayed by a 'stationary' **Signal** or a 'waved' **Signal** conveyed by either a flashing light panel or 'waved' flag. Championships may also mandate the use of an in-car signalling system as approved by the **ASN**.

a. **Red**/Green lights or **National Flag**: **Race** start.

b. Blue – Stationary: Another **Competitor** is following close behind.

c. Blue – 'Waved': Another **Competitor** is trying to overtake.

d. White - A service **Vehicle** or slow-moving **Vehicle** is on the **Circuit**. The white **Signal** will be waved to indicate the sector of the **Track** that the slow-moving **Vehicle** is in and held stationary whilst the **Vehicle** is in the next sector.

e. **Yellow** – 'Waved': Danger slow down sufficiently to ensure that full control of the **Vehicle** can be retained. No overtaking.

f. **Yellow** – Double 'Waved': Great danger. Slow down considerably. Be prepared to suddenly change from the projected racing line or take other evasive action including stopping if necessary. No overtaking.

g. **Yellow** with **Red** Stripes – Stationary: Slippery surface ahead.

h. **Yellow** with **Red** Stripes – 'Waved': Slippery surface imminent.

i. Green – 'Waved': All clear at the end of a danger area controlled by yellow **Signals**. Also used to signify the start of a formation lap and shown at all posts during first lap of each **Practice** session and during each formation lap.

j. **Red**: Immediately cease driving at racing speed and proceed slowly without overtaking and with maximum caution to pits or start line obeying **Marshal**'s instructions and or **Signals** and being prepared to stop should the **Track** be blocked.

k. Black with orange disc displayed with the **Competitor's** number: Notification of apparent technical failure or of a fire which might not be obvious to the **Driver**. The **Vehicle** concerned must call at its pit for repairs on the next lap.

l. **Black and White** Rectangular split diagonally and displayed with the **Competitor**'s number: A warning to the **Drive**r that their driving conduct is suspect and they may be shown a black **Signal** on further reports.

m. Black displayed with the **Competitor**'s number: The **Drive**r must stop at their pit on the next lap of receiving the **Signal** and report to the **Clerk of the Course**. A penalty of **Disqualification** may be enforced by display of the **Black Signal**.

n. **Black and White** Chequered - End of **Race** or **Practice**.

o. **Hazard Area Board** which will be displayed as a warning of a hazard that was not present when the **Practice** or **Race** started.

p. **SC Board** will be displayed in the event of the **Safety Car** being deployed.

q. A **Full Course Yellow** panel will be displayed in the event of **Full Course Yellows** being deployed

1.8. At an incident where the **Track** is obstructed or **Marshal**s are working at the trackside the following **Signal**s will be used:

a. A 'waved' **Yellow Signal** before a double 'waved' **Yellow Signal**.

b. A double 'waved' **Yellow** immediately preceding the incident.

c. A 'waved' **Green** immediately after the incident.

d. If the incident is well off the **Track** and marshals are not working at the trackside the incident may be indicated by a single 'waved' yellow followed by a 'waved' green or by a **Hazard Area** board.

1.9. The **Code 60 Signal** (purple) may be brought into operation to neutralise a **Race** at the sole decision of the **Clerk of the Course** provided that all **Marshals Posts** in use are in communication with **Race Control** its use will have been confirmed in the **Official Document**s and its operation in accordance with **Arts.3 of this App.8** and explained in the **Drivers** briefing.

1.10. Overtaking or not slowing down is an offence from the point of passing the **Yellow Signal**(s) until the **Green Signal** is passed.

1.11. If a hazard has been indicated by **Yellow Signal**s as above the **Signal**s may be withdrawn even though the hazard remains. It will then be indicated by a **Hazard Area** board at the **Marshals Post** preceding the hazard. It is then the **Competitor**'s responsibility to take appropriate care.

1.12. When a **Race** is stopped by the **Red Signal** the method of re-starting or deciding the result will be in accordance with **Arts.9.1.b – c and Art.9.2 of App.6 to this Chapter.**

1.13. Other than the **Starter**'s **Flag** the minimum **Signal** size is:

a. for any flag 750mm x 600mm (N.B International Regulations require the Red flag to be 800mm x 1000mm minimum)

b. Light panels **FIA** Homologated Grade 3 and above.

1.14. Once the black and white chequered **Signal** has been displayed the **Competition** is over and may not be restarted. The black and white chequered **Signal** must not be displayed at the same time as a red **Signal**.

1.15. If during any **Race** no **Vehicle** crosses the control line under its own power during a period of five minutes the end of **Race Signal** shall be displayed and the results announced on the relative positions of **Vehicles** at the time they last crossed the control line under their own power.

1.16. **SIGNAL COLOURS**

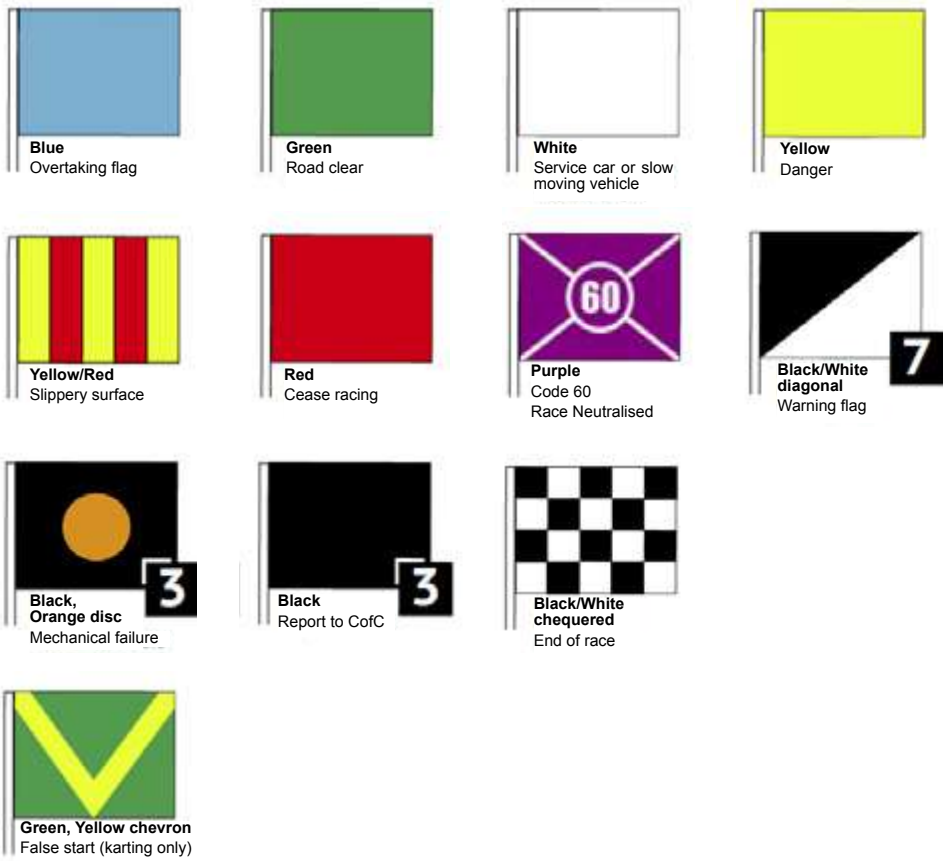

2. Operation of Safety Car

2.1. The **Safety Car** will be brought into operation to neutralise a **Race** upon the sole decision of the **Clerk of the Course**. The **Safety Car** will be driven by an experienced circuit **Drive**r and will carry an observer capable of recognising all competing **Vehicles** and who is in permanent radio contact with **Race Control** **Ch.5 PART A App.5 Art.1.3.r**

2.2. The safety car, yellow/amber lights illuminated, will normally join and exit the **Circuit** from the pit lane and if light **Signals** are not in use, the safety car boards will be shown initially from the **Start/Finish** line. If these locations are to be varied specific written instructions and verbal briefings will be issued detailing the exact locations to be used.

2.3. On the order from the **Clerk of the Course**, the **Safety Car** will join the **Circuit** with its flashing lights on, regardless of where the **Race** leader is.

2.4. At venues where light panels are operational then these signals will be simultaneously broadcast by Race

Control to all marshals' posts and may be supplemented with flags. When the order is given to deploy the **Safety Car** a 'waved' yellow **Signal** and **"SC"** board will be displayed at the **Start**/**Finish** line. The 'waved' yellow **Signal**s and **"SC"** boards will be displayed simultaneously by Race Control where light panels are installed or will flow around the **Circuit** in both directions as adjacent **Marshals Posts** display both their waved yellow **Signal** and **"SC"** board where there are no panels.

2.5. Flashing yellow lights may also be used at the start-line and at other points around the **Circuit**.

2.6. All competing **Vehicles**, when notified of the **Safety Car** intervention (by the flag **Signal**s, **"SC"** boards, or by any other means) will reduce speed and line up behind the **Safety Car** no more than 5 car lengths apart and maintaining the same speed as it. Overtaking or overlapping of any other competing **Vehicle** during a **Safety Car** intervention is forbidden. Overtaking of a **Safety Car** is forbidden unless the particular **Competitor** concerned is signalled to overtake the **Safety Car** by the observer in the **Safety Car**. Any overtaking or overlapping during the **Safety Car** intervention will be deemed a breach of signals, **Ch.2 App.12 Art.1.2.b**

2.7. When ordered to do so by the **Clerk of the Course**, the observer in the **Safety Car** will wave past any **Vehicles** between the **Safety Car** and the **Race** leader. These **Vehicles** will continue at reduced speed and without overtaking until they reach the line of **Vehicles** behind the **Safety Car**.

2.8. While the **Safety Car** is in operation competing **Vehicles** may enter the pit lane but may only rejoin the **Track** when signalled to do so and not when the **Safety Car** and the line of **Vehicles** following it are about to pass or are passing the pit exit. A **Vehicle** re-joining the **Track** must proceed at an appropriate speed until it reaches the end of the line of **Vehicles** behind the **Safety Car**.

2.9. The **Safety Car** will remain in operation until at least the majority of competing **Vehicles** on the **Circuit** are lined up behind it.

2.10. When the **Clerk of the Course** calls in the **Safety Car** it will extinguish the yellow/amber flashing lights prior to exiting the **Circuit**. This would normally be such that a minimum of 25% of a lap for **Circuit**s over 2 miles and 50% of a lap for **Circuit**s under 2 miles should be completed by the **Safety Car** with its lights extinguished.

2.11. Following the **Safety Car** extinguishing its lights and prior to passing the green **Signal** the **Race** leader will dictate the pace and if necessary fall more than five car lengths behind the **Safety Car**. In order to avoid the likelihood of accidents before the **Safety Car** returns to the pits from the point at which the lights on the **Vehicle** are extinguished **Drivers** must proceed at a pace which will not lead to the **Safety Car** being overtaken before it has entered the pit road, involves no erratic acceleration or braking nor any other manoeuvre which is likely to either endanger other **Drivers** or impede the restart.

2.12. As the safety car is entering the pit entry road the green **Signal** will be displayed at the **Start/Finish** line and the "sc" board withdrawn. Following this, display of the start **Signal** yellow **Signal** and "sc" boards at the **Marshals Posts** will be withdrawn and be replaced with a 'waved green' **Signal** for one lap (where light panels are being used the green **Signal** will be switched off after 10 seconds). The 'waved' green **Signal** will be displayed simultaneously by race control where light panels are installed or will flow around the **Circuit** in both directions as an adjacent post displays their 'waved' green **Signal** where there are no panels. This system may be supplemented by a message being simultaneously broadcast to all **Marshals Posts** if such a communication system is available. Overtaking or overlapping remains strictly forbidden until the start **Signal** at the **Start/Finish** line is passed. Any overtaking or overlapping after the safety car **Signals** have been withdrawn and before passing the green **Signal** at the **Control Line** will be deemed to be gaining an advantage (**Ch.2 Annexe A Art.1.3**).

2.13. Each lap covered while the **Safety Car** is in service will be counted as a **Race** lap unless specified to the contrary in **Championship Regulations**.

2.14. Under certain circumstances the **Clerk of the Course** may ask the **Safety Car** to use the pit lane. In this case and provided its yellow/amber lights remain illuminated all **Vehicles** must follow it into the pit lane without overtaking. Any **Vehicle** entering the pit lane under these circumstances may stop at its designated garage area.

2.15. Should it be necessary to stop a **Race** during a safety car deployment the safety car and all competing

Vehicles following will stop at a position indicated by the safety car observer (which will usually be either the grid or **Parc Fermé**), all competing Vehicles must stop behind it the safety car unless otherwise directed.

2.16. In exceptional circumstances the following may apply:

a. The **Race** may be started behind the **Safety Car**.

i. In this case its flashing yellow/amber lights will be turned on at the two-minute **Signal**.

ii. This is the **Signal** to the **Entrant**s/**Drivers** that the **Race** will be started behind the **Safety Car** and it will remain at the front of the grid during the remainder of the countdown.

iii. When the **Green Signal** is shown at the **Start** / **Finish Line**, the **Safety Car** will leave the grid and all **Vehicles** will follow in single file in grid order no more than 5 (five) **Vehicle** lengths apart.

iv. Subject to **Arts. b. - f. below** the **Race** will be deemed to have started when the **Safety Car** leaves the grid and the **Green Signal** is displayed.

b. **Vehicles** will leave the grid in single file grid order behind the **Safety Car** under the instruction of the **Chief Start/Finish** line **Marshal**. **Vehicles** will remain in single file without overtaking, except that a **Vehicle** that falls behind may regain its grid position if the **Vehicles** behind it could not avoid passing without unduly delaying the remainder of the field. In this case **Drivers** may carefully overtake to re-establish their original starting grid order. If a **Vehicle** falls to the back of the grid it must remain at the back of the grid.

c. Any **Vehicle**(s) delayed leaving the grid may not overtake another moving **Vehicle** if stationary after the remainder of the **Vehicles** had crossed the line. In this case the **Vehicle**(s) shall remain at the back of the grid in the order they left the grid.

d. A time penalty or **Drive Through Penalty** may be imposed on any **Drive**r who in the opinion of the **Clerk of the Course** unnecessarily overtakes another **Drive**r during these laps.

e. The **"SC"** boards and **Yellow Signal**s will be displayed at **Signalling Post**s around the **Circuit** until the **Clerk of the Course** withdraws the **Safety Car** from use in accordance with **Arts.2.10–2.12.**

f. All laps undertaken in this start procedure will be deemed to be counted as **Race** laps

2.17. Any **Vehicle** being driven unnecessarily slowly, erratically or which is deemed potentially dangerous to other **Drivers** at any time whilst the **Safety Car** is deployed will be reported to the **Clerk of the Course**. This will apply whether any such **Vehicle** is being driven on the **Track,** the pit entry or the pit lane.

3. Operation of Code 60

3.1. The **Code 60 Signal** (**Code 60**) will be brought into operation to neutralise a **Race** at the sole decision of the **Clerk of the Course** provided that all **Signalling Post**s in use are in direct communication with **Race Control**.

3.2. The order to display the **Signal** will be given to **Marshal Posts** following a countdown of not less than 15 seconds and come into operation after an 'on air' countdown "5-4-3-2-1 **Code 60 Signal Code 60 Signal**".

3.3. On the order from the **Clerk of the Course** the **Signal** will be waved at the **Start/Finish** line and simultaneously at all **Signalling Posts** in use around the **Circuit**. The **Signal** will continue to be 'waved' for a minimum of one lap and until all **Vehicles** have visibly slowed down following which the **Signal** will then be held stationary until the **Clerk of the Course** withdraws the **Code 60** in accordance with **Art.3.7** below.

3.4. **Yellow Signal**s will continue to be waved at the incident but green **Signal**s will not follow.

3.5. All competing **Vehicles** when notified of the **Code 60** intervention (by the flag **Signal** or by any other means) will release the throttle, gently reduce their speed to 60kph and should remain behind the **Vehicle** in front. **Note:** It is essential that **Drivers** slow down and avoiding sharp braking.

3.6. While the **Code 60** is in operation competing **Vehicles** may enter the pit lane but may only re-join the **Track** when signalled to do so by an **Official/Marshal**.

3.7. When the **Clerk of the Course** orders withdrawal of the **Code 60** there will be a radio message to all **Signalling Post**s in use "prepare to go green in less than 30 seconds" and be withdrawn after a countdown "5-4-3-2-1 Green **Flag**, Green **Flag**". **Code 60** will then immediately be replaced by a 'waved' green **Signal**. The 'waved' green **Signal** will be shown simultaneously at all **Signalling Post**s.

3.8. **Racing** will resume as soon as the green **Signal** is displayed.

3.9. Overtaking is strictly forbidden until the green **Signal** is displayed. Any infringements may be penalised by a time penalty of 1 minute or more.

3.10. Each lap covered while the **Code 60** is in operation will be counted as a **Race** lap unless specified to the contrary in the **Official Documents**.

4. Operation of Full Course Yellow

4.1. **Full Course Yellows** (**FCY**) will be brought into operation to neutralise a race at the sole decision of the **Clerk of the Course**.

4.2. **Full Course Yellow** operation is only permitted where:

a. all **Signalling Marshals** are in direct communication with **Race Control**; and

b. **Race Control** has a form of verbal communication to the drivers (either direct or via their **Team Manager**); and

c. The cars are under a race control/timing GPS tracking system to ensure compliance and review and where a practice procedure is included in the timetable which may be within the practice session.

4.3. The order to display the **Signal** will be given to signal points following a countdown of not less than 15 seconds and come into operation after an 'on air' countdown "5-4-3-2-1 Full Course Yellow"

4.4. A **Full Course Yellow** period will be deemed to be in operation from the moment a **FCY** countdown is declared on the **Team** radio or on the timing screen.

4.5. All competing **Vehicles** when notified of the FCY intervention (by the **Signal** or by any other means) will release the throttle, gently reduce their speed to 80kph and remain behind the **Vehicle** in front. Note: It is essential that **Drivers** slow down avoiding sharp braking

4.6. While **FCY** is in operation overtaking is strictly forbidden from the moment that **FCY** is declared, which may be before yellow signals are displayed. Cars must proceed at a constant speed of 80kph in single file. Speeds will be monitored and any car exceeding the given speed will be reported and a penalty may be imposed.

4.7. **Competing Vehicles** may enter the pit lane but may only re-join the **Track** when signalled to do so by an **Official/Marshal**. The pit entry and pit exit will also be subject to a maximum speed of 80 kph.

i. **Vehicles** entering the pit lane may overtake **Vehicles** that are on the track once they cross **Safety Car Line 1**, subject to the speed restriction above.

ii. **Vehicles** exiting the pit lane may be overtaken by other **Vehicles** on track until they reach **Safety Car Line 2**.

iii. For the avoidance of doubt, **Safety Car Line 1** and **Safety Car Line 2** will be specified in each events **Briefing**.

4.8. Once the problem is resolved, the track will return to Green and the information will be given on the monitors and Team radio

4.9. When the **Clerk of the Course** orders withdrawal of **FCY** there will be a radio message to all **Signalling Posts** in use "prepare to go green in less than 30 seconds" and be withdrawn after a countdown "5-4-3-2-1 Green Flag, Green Flag".

4.10. **FCY** will then immediately be replaced by a 'waved' green **Signal**. The 'waved' green **Signal** will be shown simultaneously at all **Signalling Posts**.

4.11. **Racing** will resume as soon as the green **Signal** is displayed

4.12. Should the problem not be resolved, the **Safety Car** may be deployed according to **Art.5.1** below.

4.13. The procedure as detailed above will be completed with specific instructions during the **Briefings**, and may be amended by **Bulletins** from the **Clerk of the Course** during the season.

4.14. Each lap covered while **FCY** is in operation will be counted as a **Race** lap unless specified to the contrary in **Championship Regulations**.

5. Safety Car intervention after FCY

5.1. A **Full Course Yellow** period may be declared however during its operation it may be considered that before a restart the **Safety Car** is deployed. In this case, the **Safety Car** will join the track, with its lights off, and will overtake the cars on track until it is in front of the leader. It will then switch on its lights,and the SC boards will be shown. From this point onwards it will proceed according to **Art.20-33**.

CHAPTER 12 RACE

Appendix 9 - End of Race Results

This Appendix must be read in conjunction with Ch.3 App. 6 and Ch.4 App.3

1.1. All **Race**s shall end in accordance with **App.6 to this Chapter**.

1.2. All **Results** at the **Event** including provisional and / or final **Results** shall be calculated in accordance with the **Official Document**s (see **Ch.3 App.10**) following the application of any Penalties to **Competitor**s (see **App.10 to this Chapter and Ch.2**).

1.3. Except for the several authorities vested in the **ASN** and the independent **National Court** under the **NCR** the **Results** of an **Event** shall remain **Provisional Results** until the final conclusion of any **Appeals** (see **Ch.2**) affecting the **Results** of the **Event**.

1.4. **Results** that remain provisional under **Art.1.3 above** shall only be declared and published by the **Organiser**s as **Final Results** following the conclusion of all **Judicial** procedures including but not exclusively any **Appeals** arising from the **Event** (including **Appeals** against the **Provisional Results**).

1.5. Specific regulations regarding **Organiser**s and the publication of **Results** are provided at **Ch.3 App.6.**

1.6. In the case of a **Race** over a set distance the winner shall be the **Competitor** who covers that distance in the least time and the end of **Race Signal** will be displayed when the first **Competitor** completes the set distance.

1.7. In the case of a **Race** for a set time the winner will be the **Competitor** who covers the greatest distance in that time and the end of **Race Signal** will be displayed at the end of the set time unless the **Official Document**s specify otherwise.

1.8. After receiving the end of **Race** or **Practice** signal **Vehicles** must maintain station and proceed directly to **Parc Fermé** unless the **Official Document**s specify to the contrary.

1.9. The **Parc Fermé** area is defined in **Ch.1 App.1** and all **Vehicles** must be taken directly to this area (including those who did not complete the **Practice** or **Race**) unless advised to the contrary by a **Technical Official** or by the **Clerk of the Course**. Only the **Drive**r and **Officials** are granted access to **Parc Fermé** unless a **Competitor**'s team member is requested by a **Technical Official** to be present.

1.10. **Organiser**s are permitted to make specific provisions in the **Official Document**s relating to **Parc Fermé** including but not exclusively the admission of personnel and instructions and / or restrictions on data gathering including the recovery of **Judicial** or other moving images under the control of the **Organiser**s.

1.11. Except for **Endurance Racing** unless the **Official Document**s state otherwise in order to be classified as a finisher in a **Race** only **Vehicles** which have covered at least 80% of the distance covered by the class winner and which cross the **Finish Line** (not in the **Pit Lane**) under their own power and within four minutes after the overall winner will be classified in the **Provisional Results**. Should this percentage not result in a full number of laps the decimals will be disregarded.

1.12. Should the end of the **Race Signal** inadvertently or otherwise be displayed before the leading **Vehicle** completes the scheduled number of laps or before the prescribed **Race** time has been completed the **Race** will nevertheless be deemed to end at the moment the **Signal** is given. If the chequered **Flag/Signal** is given to the leader then the **Result** will be issued accordingly but if the chequered **Flag/Signal** is first given to a **Competitor** other than the leader then the **Result** should be given at the end of the last completed lap of the leader. Should the end of the **Race Signal** be inadvertently delayed the **Race** will nevertheless be deemed to finish at the correct moment and **Competitor**s be classified accordingly in the **Results**.

1.13. Any **Race** that has been run in its entirety under **Safety Car** conditions shall be declared null and void.

1.14. Any publication of **Event** or **Championship Results** except by the **Organiser**s shall be of no regulatory value.

CHAPTER 12 RACE

Appendix 10 - Penalties

1. This Chapter must be read in conjunction with Ch.2

1.1. In addition to any penalties that may be applied against a **Competitor** under Ch.2 and / or the **Official Document**s including for the avoidance of doubt penalties arising from **Track Regulations** (see App.7 of this Chapter) the following penalties may be applied by the **Clerk of the Course**.

2. 'Stop-Go' and 'Drive Through' Penalties (Ch.2 App.12 Art.1.4)

2.1. If the **Regulations** for an **Event** or the relevant **Championship Regulations** specifically provide for a **'Stop-Go'** penalty or a '**Drive Through**' penalty the following procedure will be adopted:

a. When the **Clerk of the Course** imposes a **'Stop-Go'** or '**Drive Through**' penalty the appropriate **Official** must be immediately instructed to display the black **Signal** and the **Competitor**'s number together with a board or panel which states '**Stop-Go Penalty**' or '**Drive Through Penalty**'.

b. The relevant **Drive**r may cover no more than three complete laps after first passing the displayed board or receiving a radio instruction from **Race Control** before entering the pit lane and taking the penalty.

c. The **Clerk of the Course** will advise the **Chief Pit Marshal** who in turn will notify the team concerned in writing where possible.

d. The relevant **Drive**r who receives a **'Stop-Go'** penalty must go directly to the designated area as detailed in the **Official Document**s without stopping elsewhere in the pit lane and must remain there for the period of the time penalty imposed.

e. After the **Signal** indicating the completion of the time penalty is given the **Drive**r shall re-join the **Race** without stopping in the pit lane which includes the relevant **Drivers**' pit.

f. Whilst a **Vehicle** is stationary in the designated area completing a **'Stop-Go'** penalty it may not be worked on unless the engine stops when it may be restarted only after the penalty period has elapsed.

g. If the **Drive**r is unable to start the **Vehicle** without assistance other than with the use of external batteries it must be moved to its pit by its mechanics.

h. The relevant **Drive**r who receives a '**Drive Through**' penalty must enter the pit lane and re-join the **Race** without stopping.

i. At all times the **Drive**r will drive in the pit lane in a safe manner obeying all **Signal**s and the speed limit.

j. Unless the **Drive**r has already entered the pit lane for the purposes of serving the penalty prior to display of the **Safety Car** board at the **Start**/**Finish** line the **Drive**r may not carry out the penalty until such time as the **Vehicle** subject to penalty passes the **Green Signal** at the **Start**/**Finish** line at the end of the **Safety Car** deployment. Any laps carried out behind the **Safety Car** will be added to the three-lap maximum referred to at b. above.

k. Any breach or failure to comply with these procedures may result in additional penalties including disqualification being imposed which may incur penalty points.

l. Should either a **'Stop-Go'** or '**Drive Through**' penalty be imposed and notified during the last five laps or after the end of the **Race** or depending on the case for duration races during the last 10 minutes or cannot be imposed for operational reasons an alternative time penalty of no less than 30 seconds and no more than one minute shall be added to any penalty period and the elapsed time of the **Vehicle** concerned.

m. The above penalties when applied shall be noted on the **Results**.

3. Loss of Lap Time

3.1. The **Clerk of the Course** and/or the **Stewards of the Event** may disallow a lap time / times for contravention of the **Regulations** during qualifying

CHAPTER 12 RACE

Appendix 11 - Pit and Paddock Regulations

To the extent applicable this Appendix must be read in conjunction with Ch.10 **Circuit**s and **Venue**s

This Appendix must also be read in conjunction with the relevant provisions of the **Official Document**s and **Competitor**s must respect the terms and conditions of access to **Venue**s imposed by **Venue** owners and or operators.

1. Assistance

1.1. During the **Event Drivers** may receive assistance only:

a. At the pits or

b. From **Officials**.

1.2. Work on **Vehicles** may only take place in designated pit garages or allocated paddock areas.

2. Refuelling

2.1. Refuelling of **Vehicles** other than by a **Drive**r or **Officials** may only be carried out at the pits or in the paddock.

2.2. Unless expressly permitted by the **Official Document**s refuelling may not take place during a **Practice** session **Qualifying** session or **Race**.

2.3. The **Drive**r shall vacate the **Vehicle** and the engine be stopped throughout any refuelling operation.

2.4. Refuelling within the pit lane may only be carried out using either a churn of no more than 25 litres capacity equipped with a self-seal connection and closed loop breathing system or a refuelling rig in compliance with **FIA** requirements.

2.5. The **Entrant** shall ensure that throughout refuelling one person shall stand by the **Vehicle** with a fire extinguisher at the ready.

2.6. All personnel refuelling the **Vehicle** or on standby with a fire extinguisher during a pit stop must wear a safety suit in accordance with Ch.9 Art.3–4 and flame-resistant balaclava and gloves complying with **FIA** regulations.

2.7. Not more than five gallons of fuel may be kept in any pit unless the **Official Document**s allow otherwise.

2.8. In all cases where an additional quantity of fuel is authorised (see Art.2.7 above) the container and the method of delivery to the **Vehicle** must be specified in the **Official Document**s.

2.9. Storage of fuel is only permitted in containers having a screw or other approved safety cap and complying with the Law and local Fire **Regulations**.

2.10. If any fuel is stored in a pit the **Entrant** of the **Vehicle** using that pit shall ensure that an effective fire extinguisher is kept adjacent to such fuel.

3. General

3.1. A maximum of 3 people including timekeeper and one person detailed by the **Entrant** for the purpose of signalling may be on the pit wall / signalling area at any time unless the **Official Document**s stipulate otherwise.

3.2. With the exception of Art.3.1 above only the fire cover attendant specified in Art.2.6 above the **Drive**r and three other persons may be in the pits in attendance on one **Vehicle** unless the **Official Document**s state otherwise.

3.3. Each **Drive**r shall be acquainted with the regulations of the pit and paddock area relevant to the **Venue** at which the **Competition** is held.

3.4. The pit lane exit will be closed immediately upon the chequered **Flag/Signal** being displayed to indicate the end of any **Practice Qualifying** or **Race** or upon the display of the **Red Signal** at any time.

3.5. Except while on the **Track** no competing **Vehicle** shall be driven at a speed exceeding 10mph without the specific permission of the **Clerk of the Course**.

3.6. Whilst in the pit lane:

* indicates maximum figures that may be reduced in the **Official Document**s

a. *the maximum pit lane speed limit is 60kph /37.2 mph.

b. it is recommended that all personnel wear a high visibility jacket/vest approved by the **Organiser**s. From 30 minutes after sunset a high visibility jacket/vest is mandatory.

c. *there must be no more than 3 people on the pit wall, per **Vehicle**.

d. *there must be no more than 4 people working on the **Vehicle** at any one time.

e. all equipment and personnel must be in the pit garage when the relevant **Vehicle** is not making a pit stop with the exception of pit signallers. Where there are no garages arrangements must be approved in advance with the **ASN**.

f. no work may take place on the **Vehicle** during refuelling and the engine must be switched off

g. it is the responsibility of the **Entrant** to release their **Vehicle** after a pit stop only when it is safe to do so. **Vehicles** in the fast lane have priority over those leaving the working area

CHAPTER 12 RACE

Appendix 12 - Competitor Regulations

1. General

1.1. This **Appendix** must be read in conjunction with this Ch.12 and Chapters 1–2 and 6–9 as relevant

2. During the Competition:

2.1. **Drivers** and any pit crew and or pit personnel must not smoke or use electronic alternatives in the pits or pit garages.

2.2. The **Drive**r must be the only person in the **Vehicle** whilst the **Vehicle** is on the **Track** unless permitted by the **ASN**.

2.3. A **Drive**r may drive only one **Vehicle** with the exception of i and ii below. Not more than one **Drive**r may drive the same **Vehicle** in any one **Race** unless the **Official Document**s specify otherwise.

i. the provisions relating to Endurance Racing.

ii. races of 40 minutes or more that provide for driver changes where a driver may drive a maximum of 2 Vehicles during the Event provided they are properly entered and qualified in each Vehicle. The Official Documents will need to clearly define the eligibility of Championship Points.

2.4. During **Practice**, **Qualifying** and the **Race** no team personnel are allowed on the **Track** except that whilst a **Vehicle** is at its designated pit when its team personnel may work on the **Vehicle**.

2.5. Drivers must refrain from smoking and / or using electronic alternatives.

3. Driver Personal Safety Equipment

3.1. A **Drive**r shall throughout the **Competition** wear properly fastened and positioned:

a. A crash helmet to a standard specified in the current Regulations and bearing an ASN approval sticker, which fits properly and is in a serviceable condition (see **Ch.9 Art.5 - 9**).

b. Goggles or visor of splinter-proof material (unless in a closed Vehicle with a full-size windscreen in use) sufficient to protect their eyes.

c. Flame Resistant Overalls which shall cover arms, legs and the torso up to the neck. The use of flame-resistant socks and underwear is strongly recommended. Flame resistant balaclava, gloves and shoes are mandatory.

d. For Events outside the UK the mandatory minimum standards for Drivers in Circuit Racing would normally be FIA specification personal protection equipment.

e. An FIA approved FHR device fitted in accordance with **Ch.9 Art.10** is mandatory for Drivers in Circuit Racing except for Period Defined Vehicles for which it is recommended.

3.2. All items must be produced for inspection and approval at **Scrutineering**.

4. Competitors Vehicles

4.1. **Competitor**s' **Vehicles** must conform with the applicable **Technical Regulations**.

CHAPTER 12 RACE

Appendix 13 - Competitors Vehicles Technical Regulations

This Appendix must be read in conjunction with the relevant provisions of Chapters 7 and 8 any **Formulae Regulations** and **Official Documents.**

1. All Vehicles competing in races must:

1.1. Have a bulkhead between any fuel tank and filler and the **Driver** / **Passenger** compartment sufficient to prevent the passage of flame or liquid. Where a fuel tank constitutes part of the bulkhead between the passenger and luggage compartments an additional bulkhead must be fitted. Additional fuel tank protection may be required for open or single seater cars (see Ch.7 App.4). **Vehicles** of periods A to F are exempt from this requirement.

1.2. Not have any skirts or intermediary devices bridging the gap between the underside of the chassis/body of the **Vehicle** and the road/**Track**. Ground clearance to be as per definition 40mm minimum unless stated otherwise in the **Official Documents**.

1.3. Have substantial towing eyes securely fixed to the main structure of the **Vehicle** front and rear within the confines of the body to enable the **Vehicle** to be moved. **Vehicles** of periods A to F and single seater racing **Vehicles** are exempt from this requirement subject to a suitable towing point being clearly identified. Towing eyes must have a minimum internal diameter of 60mm. Towing eyes/towing points should be painted a contrasting bright colour (dayglo red, orange or yellow) marked with an arrow and the word “tow”.

1.4. The following configuration and specifications are strongly recommended:

a. **Vehicles** to be equipped with two front and two rear towing eyes positioned equally either side of the longitudinal centre line.

b. The towing eyes to be made of steel wire rope of at least 6mm diameter with a 6x19 wire core. Each towing eye to have a breaking-strain of at least 2 tons and allow the passage of a cylinder with a diameter of 60mm.

c. The towing eye to be fixed to a structural part of the chassis with a minimum of M10 (Grade 8.8) fixings or looped around a structural chassis part the inner part must be flexible in order for the towing eye to be retracted inside the bodywork profile.

d. Towing eyes should be situated 25mm forward of the adjacent bodywork with clearance of 100mm above and below to enable recovery crews to attach straps and shackles.

e. A “pull-cord” to be attached to the towing eye to enable the marshals to access it. The end attached to the chassis may be either ‘thimble’ or ‘open-loop’ style.

1.5. Have substantial underbody protection covering any area of fuel tank if exposed to running damage. (Applicable mainly to tanks of plastic construction.)

2. Body (including Aerodynamics)

2.1. Have any windscreen if of glass of laminated type only.

2.2. Rear screens shall be clear or may be tinted provided that the tint does not significantly affect through vision (in or out) or distort the colours of **Signals**, lights or flags.

2.3. If advertising is allowed on the windscreen not have the advertising obscuring the **Driver**’s vision. Advertising on other transparent surfaces is prohibited unless specified in the **Official Documents.**

2.4. The **Driver’s** name may be displayed on the rear side and/or the rear screen in letters not exceeding 100mm high.

2.5. Have any cover over the **Passenger’s** compartment alongside the **Driver** composed of foldable material or if of a rigid material the edge adjacent to the **Driver** to have a minimum vertical dimension of 40mm.

a. Where the cover is of a rigid material the edge is to be protected with non-flammable padding (see Ch.7) **Vehicles** of Periods A to F exempt if proven that original manufacturer's design is maintaned and non-flammable padding is fitted.

2.6. Have any undertray provided with drainage holes to prevent accumulation of liquids.

3. A closed Vehicle must have:

3.1. Effective means of ventilating the passenger compartment.

3.2. Means of access on either side of the **Passenger** compartment operable from the inside and the outside and sufficient in size to remove the occupant without impedance by door locking devices.

3.3. It is recommended to have the **Driver's** window closed whilst racing – or that suitable netting should be installed in the window opening to act as a restraint to stop the **Driver's** arms or head inadvertently emerging from the **Vehicle**.

3.4. Other than a road going **Vehicle** have bonnet security clips fitted.

4. Seating

4.1. Not carry anyone other than the **Drive**r whilst on **Track** except with the permission of the **ASN**.

5. Brakes

5.1. Be equipped with brakes which comply with **Statutory Requirements** as to the construction and use of Motor **Vehicles** or if there is no mechanical system available for applying braking effort to at least two wheels there must be two hydraulic systems so that in event of failure of one system braking is maintained on at least two wheels.

5.2. **Vehicles** constructed after 1930 must have brakes on all wheels.

5.3. The braking system on all **Vehicles** must be capable of demonstrating its efficiency without impairing the **Driver's** control when tested immediately prior to an **Event**.

5.4. It must be possible under all conditions running or stationary for 25% minimum braking effort to be applied by the **Drive**r through the braking system to each axle. (**Vehicle** models introduced prior to 31.12.65 are exempt from this requirement.)

5.5. Brake balance adjusters must not be available for adjustment during running if they contravene Art.5.4 above.

5.6. Not be fitted with Anti-Locking braking devices unless a **Production Car** with the device fitted as standard equipment by the manufacturer.

6. Wheels

6.1. Have any spare wheels securely fastened in position (a spare wheel need not be carried unless specified in the **Official Document**s)

6.2. Have all nuts securing road wheels excepting those of centre-lock type of steel and in thread contact over a minimum length of 1½ bolt/stud diameters. Extended or composite wheel bolts/studs are prohibited. **Vehicles** of periods A to D are exempt from this requirement.

7. Tyres

7.1. Use only tyres as specified by **Tyre Regulations**.

7.2. Remould or retread tyres are prohibited unless listed in Ch.8 or the **Vehicle** was constructed prior to 1940.

8. Oil Systems

8.1. Have any oil tank which is situated outside the chassis or main structure of the **Vehicle** suitably covered with a protective coating (e.g. GRP). On rear engined **Vehicles** no part of the oil tank may be located to the rear of the gearbox casing. **Vehicles** of period A to D are exempt from this requirement.

8.2. Have any engine oil tank breather or overflow tube venting into atmosphere led into catch tanks which have a minimum capacity of 2 litres. For engine capacities in excess of 2 litres the catch tank capacity must have a minimum capacity of 3 litres.

8.3. Have catch tanks of translucent plastic or with a transparent inspection panel capable of being readily emptied. In any parallel system of catch tanks each tank must not be less than half the minimum required capacity. Containers of cross section of less than 46 sq cm are prohibited.

8.4. Positive crankcase ventilation systems breathing fluids directly into the inlet manifolds may be accepted as an alternative to catch tanks but breather systems and catch tanks must be used in such a way as to prevent oil from spilling onto the road/**Track**.

9. Fuel Systems Ch.7 App.4

9.1. These must be equipped with an effective method of stopping fuel supply and operable by the **Drive**r when normally seated. This to be combined with or located adjacent to the internal ignition cut-off switch.

10. Electrical Equipment Circuit Breakers and Ignition Components

10.1. **Vehicles** must be equipped with an externally operated circuit breaker having positive ON-OFF positions clearly marked.

10.2. An external circuit breaker is not mandatory on open cars of Periods A to F but is strongly recommended.

10.3. The internal ignition cut-off and fuel pump isolation system(s) must be operable by the **Drive**r when normally seated irrespective of whether a safety harness is worn or not.

10.4. Not have any ignition components which may run at a voltage exceeding 60V located in the cockpit area in **Racing Cars**. **Vehicles** of periods A to E are exempt from this requirement.

10.5. Except for **Racing Cars**, **Clubmans Car**s, **750 Formula**, **Legends Cars** and Period A to E, all **Vehicles** must be equipped with a pair of brake lights equally disposed about the **Vehicle** centre line, on the same horizontal plane with a minimum of 300mm between them and which are directly operated by the braking system without any time delay.

11. Safety

11.1. Be fitted with a safety roll-over bar (ROPS) complying with **ASN** requirements as specified in Ch.7 except for **Vehicles** of Periods A - E inclusive.

11.2. It is strongly recommended that all **Vehicles** be fitted with safety roll-over bars.

11.3. Be fitted with currently **FIA** Homologated safety harness to be worn at all times by the **Drive**r during training, **Practice** and **Competition** unless the **Vehicle** was constructed in Periods A to E.

11.4. If fitted with lightened non-standard doors the **Vehicle** must be fitted with a horizontal safety bar across the door(s) aperture below the line of the window and at a suitable height to protect the **Drive**r. This must not be integral with the door.

11.5. Have any forward facing lamps of more than 320 sq mm in surface area adequately protected and secured in case of glass breakage.

11.6. If permitted by the **Official Document**s all forward facing lights may be removed including Headlights sidelights and direction indicators.

11.7. Not pass fluids through any chassis tubes in space frame **Vehicles**.

11.8. Glass sunroofs are not permitted. Sunroofs may be of a non-shattering solid material other than glass. The sunroof aperture may be closed by solid material permanently fitted in place.

11.9. Exceptionally **Vehicles** fitted with fabric, folding type sunroofs are permitted providing that they are fitted with a full roll cage with ROPS as in Ch.7 App.3 Art.22–25. Any sunroof must be firmly secured in the closed position.

11.10. **Vehicles** of Periods A-F be equipped with a fire extinguisher in accordance with Ch.7 App.6 Art.3. Other **Vehicles** to be equipped with a fire extinguisher in accordance with Ch.7 App.6 Art.1.2 to Art.1.15.

11.11. A red warning light in compliance with Ch.7 App.5 Art.6 must be fitted.

11.12. The **Technical Regulations** of any **Championship** or **Series** for any new design of **Single Seater Racing Car** are subject to approval and must be in compliance with the **Vehicle Technical** requirements published by the **ASN**.

11.13. It is mandatory for an FIA Impact Data Recorder (IDR) to be fitted to **Vehicles** competing in British, National status and Junior **Championships**. IDRs must be installed as per the manufacturers' instructions.

12. Radios

12.1. The Provisions of App.4 Arts.4.12–4.17 of this Chapter apply.

13. Lap Timing signals

13.1. The Provisions of App.4 Arts.4.14–4.16 of this Chapter apply.

13.2. **Vehicle Competition** Numbers and **Identification** including Novices

13.3. Must be in accordance with App.4 Art.5 of this Chapter.

14. Miscellaneous.

14.1. All **Vehicles** must be fitted with at least one mirror of minimum surface area 50sq.cm securely mounted and positioned to give a clear view to the rear. The edges of mirrors must be protected by a suitable cover to reduce the possibility of injury in the event of an incident.

14.2. All **Vehicles** must be presented at **Scrutineering** with all steering mechanism suspension linkages and flexible brake lines in clean condition.

14.3. If a closed **Vehicle** or an open **Vehicle** required to run as 'road going' with a windscreen it must have an operative windscreen wiper.

14.4. If fitted with a towing ball-hitch must have it removed when competing.

14.5. The following parts of Ch.7 remain unmodified in this section unless modified in the **Official Document**s:

a. Suspension

b. Transmission

c. Cooling

d. Exhausts.

CHAPTER 12 RACE

Appendix 14 - Single Seater Dimensions

1. Drawing number 1

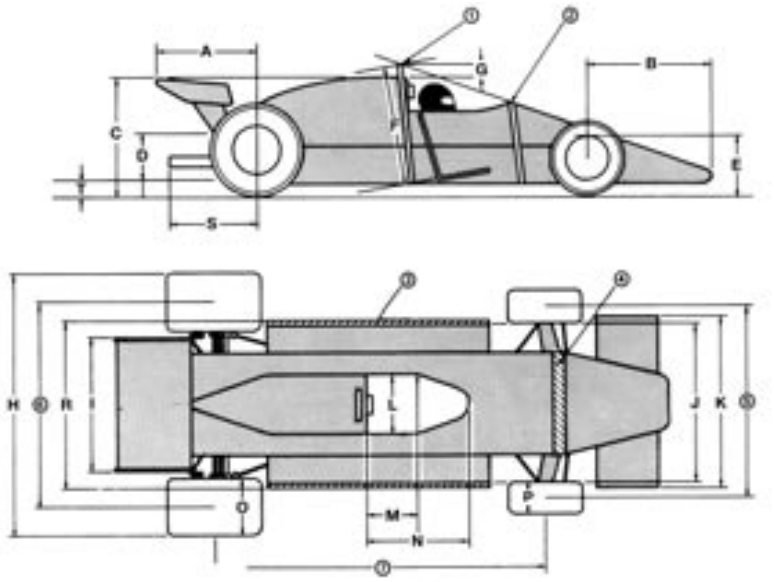

1.1. Safety roll- over bar

1.2. Substantial Support structure

1.3. Crushable structure

1.4. Substantial structure

1.5. Front track

1.6. Rear track

1.7. Wheelbase (unless other stated in **Official Documents**)

Notes: Maximum height is measured with the **Driver** aboard. Maximum height excludes safety roll-over bar on which there is no maximum height. FIA substantial support structure (2) and (4) apply only to certain International Formulae

Single Seater Dimensions

All dimensions in cm Refer to Drawing

(A)	Maximum rear overhang from rear wheel axis unless specified otherwise	100
(B)	Maximum front overhang from front wheel axis	N/A
*(C)	Maximum height measured from the ground	90
(D)	Exhaust height measured from the ground	
(E)	Maximum body height in front of front wheels	
(F)	Minimum safety roll-over bar length in line with **Driver's** spine	92
(G)	Minimum allowed helmet clearance	5
(H)	Maximum width	N/A
(I)	Maximum rear aerofoil width	95
(J)	Maximum body width behind front wheels	N/A
(K)	Maximum nose width	N/A
(L)	Minimum cockpit opening	45
(M)	Minimum cockpit parallel opening length	30
(N)	Minimum cockpit overall opening length	60
(O)	Maximum rear wheel width	N/A
(P)	Maximum front wheel width	N/A
(R)	Maximum width including crushable	N/A
(S)	Maximum exhaust length from rear wheel axis	–
(T)	Minimum ground clearance	4
(7)	Minimum wheelbase (unless stated otherwise in **Official Documents**)	183

(* Except for within 450mm rearward of the front face of the **ROPS** and for a maximum of 150mm either side of the centre line where bodywork may not be more than 25mm higher than the upper surface of the **ROPS**.)

Chapter 13

Rally

CHAPTER 13 RALLY

This Chapter must be read in conjunction with Chapters 1-11 as appropriate.
This Chapter is separated into the following appendices:

App.1	Regulations applying to all Rallies including Public Relations and Sound Testing
App.2	Duties and Responsibilities of **Clerks of the Course** for All Types of Rally
App.3	Specific Regulations for Road Events
App.4	Road Events – Routes and Sections
App.5	Road Events – Controls and Timing Including Results
App.6	Exemption of Permit Events
App.7	Road Scheduled Time Events
App.8	Target Timed Special Stage Event Penalties
App.9	Competitors Regulations including Licensing
App.10	Competitors Specific Regulations for Special Stage Rallies
App.11A	Specific Regulations for Special Stage Rallies
App.11B	Specific Regulations for Single Venue Stage Rallies and Rally Time Trials
App.11C	Specific Regulations for Targa Rallies
App.12	Special Stage Routes and Sections
App.13	Special Stage Controls, Timing and Penalties
App.14	Schedule Timed Special Stage Event Penalties
App.15	Technical Regulations - Road, Endurance and Historic Road Rally Cars
App.16	Technical Regulations - Special Stage Rally Cars
App.17	Technical Regulations - Historic Special Stage Rally Cars
App.18	Servicing and Organised Assistance
App.19	PR Requirements Charts
App.20	Medical and Safety Cover
App.21	Specific Regulations for Junior Rally Driver Championships
App.22	Specific Regulations for Special Stage Practice / Training Events
App.23	Rally Drawings
App.24	Class Requirements

CHAPTER 13 RALLY

Appendix 1 - Regulations Applying to All Rallies including Public Relations and Sound Testing

1. General

1.1. This Appendix must be read in conjunction with all applicable Appendices to this Chapter and **Chapters 3 and 5 and 7**.

1.2. Any **Competition** traversing a **Public Highway** in England **Wales** or Scotland is subject to the provisions of the Motor **Vehicles** (**Competition**s and Trials) **Regulations**. **Applications** to run such events must be made to the **Competition Authorisation Office** (**CAO**) at the **ASN** or in the case of Scotland to the Royal Scottish Automobile **Club**. Details of the authorisation procedure are available from either organisation.

1.3. The **ASN Permit** must be obtained for all **Event**s before they are run.

1.4. The **ASN Permit** applications must be made in accordance with **Ch.3** prior to the **CAO Authorisation** being granted.

1.5. The **Permit** and the **CAO Authorisation** (where applicable) numbers must be shown in all **Final Instructions**.

1.6. The **Permit** itself is validated only when authorisation has been granted.

1.7. **Club**s must not allow a new **Organiser** to organise any **Event** without there being strict checks by experienced people concerning compliance with these **Regulations**.

1.8. **Organiser**s of **Interclub** and higher status **Event**s must have sufficient previous organisation experience.

1.9. The **ASN** will appoint a **Safety Delegate** to all Multi- **Venue Stage Rallies** and any other **Stage Rally** including **Rally Time Trial**s and **Rally Demonstration Event**s where the **ASN** deems it appropriate to do so.

1.10. The use of the public forest estates managed by **Natural Resources Wales ('NRW'), Forestry and Land Scotland ('FLS')** and **Forestry England ('FE')** must have been approved by the **ASN**. Permission must be applied for by an annually specified date prior to the **Forestry** year (which runs 1 January - 31 December).

1.11. No contact should be made with **NRW**, **FLS** or **FE** respectively before receiving approval from the **ASN** or its appointed **Forestry Liaison Office**r or **Rally4Wales**.

1.12. Specifically in the case of **Rally** if a **Championship Round** is cancelled or changes its date due to reasons of **Force Majeure** then the **Championship Organiser**s may arrange for an alternative **Event** or date for an **Event** to be included in the **Championship** calendar. Subject to the overriding authority of the **ASN** only one such change to that **Championship** is permitted and is subject to prior **ASN** approval and will only be permitted if less than 15% of the **Competitor**s registered for the **Championship** object in writing to the change.

1.13. Any Organising Club or Promotor who proposes to establish a new Stage Rally, Road Rally or Targa Road Rally, or Rally Championship, must complete an Expression of Interest form and submit this to the ASN Head of Rallying in advance for ratification. No promotion must take place prior to ratification by the ASN.

2. National Courses

2.1. The selection of any route for a **Competition** is subject to **ASN** approval. When requesting approval a detailed itinerary must be submitted giving the exact distances to be covered.

2.2. Where appropriate The Motor **Vehicles** (**Competition**s and Trials) **Regulations** must be complied with in all respects.

3. International Courses

3.1. When the projected route of an **Event** traverses the territory of other **ASN**s the **Organiser**s (through the UK **ASN**) must obtain the consent of all **ASN**s through whose territories the route may pass.

3.2. The selection of roads to be used and a detailed itinerary with expected speeds and distances must be approved by the **ASN** concerned.

3.3. The **ASN** may impose specific restrictions on the number or character of events that traverse any foreign territory.

4. Other Events

4.1. Certain **Event**s also qualify for a **Permit** or **Exemption Certificate** (Ch.3) provided they meet the **ASN Regulations** for organising **Rallies**.

5. Upgrading of Events

5.1. For a **Rally** to be considered for upgrading from **Clubman** to **Interclub** status of a similar format it must be observed as a **Clubman Event** and have a minimum of 25 starters unless special **ASN** dispensation has previously been agreed in writing.

5.2. For upgrading to **National Stage Rally** there must have been a minimum **Entry** of 50 as an **Interclub Event** of a similar format to that proposed for two consecutive years preceding first time application. Thereafter the minimum **Entry** must not be less than 50 in one of two consecutive years.

5.3. Upgrading to an **International Stage Rally** will be at the discretion of the **ASN**.

6. Public Relations

6.1. **Public Relations** work must be undertaken by **Organiser**s on all **Event**s using the **Public Highway** in accordance with the current legislation and as follows:

a. Consult with the **Route Liaison Office**rs before starting **PR work**. If the **RLO** requires additional **PR work** in sensitive areas this must be undertaken.

b. Be diplomatic positive and clear about the legal aspects of route authorisation.

c. If the **Event** is run in England or **Wales** do not intimate that it is authorised by the Police.

d. Avoid asking for 'authorisation' or 'permission' from house-holders – it invites unnecessary difficulties.

e. All **PR work** must be by responsible members of the **Organising Club** or of a **Local Club**.

f. The work should be completed to allow enough time to undertake a re-route should this prove necessary.

g. All **PR** letters must be checked by the **RLO** and must indicate who is the **Organiser** (with a contact address including email and phone number) the date of the **Event** in which direction it is travelling and the approximate time of passing.

h. **Special** consideration should be given to householders with pets or livestock.

6.2. Where an **Organiser** intends to publish a guide to the route or specific locations for spectators to see the **Event** they must ensure that:

a. Householders within 500m of any specifically advised location have been effectively **PR**'d without difficulty and these areas are marshalled.

b. The information issued contains warnings of locations that spectators must avoid (blackspots, sensitive areas etc).

c. Each **PR** crew prepares reports on each visit and these are available to the **Clerk of the Course** and the **Steward**s on the day of the **Event** and to the **RLO** or **ASN** on request.

d. **Special** note must be made about problem areas for the benefit of future **Event**s and these reports must be passed on to **RLO**s.

e. For all Road and Navigation **Rallies**, any such specifically advised location must be preceded by a manned control a maximum of 50 metres in advance.

6.3. Contact should be made with local Police before and immediately after all **Event**s.

6.4. **Rallies** with **Special Stage**s including **Single Venue Stage Rallies** must comply with App.19 Charts 1 and 2.

7. Noise Testing

7.1. Before the start of a **Competition** all **Competitor**s' cars and those **Officials**' cars that are expected to follow a substantial part of the route must pass a sound test.

7.2. This test must be conducted by an **Environmental Scrutineer** using a sound meter as prescribed in the **Technical Regulations** at Chapters 5 and 7..

7.3. Any **Vehicle** reading over 98dB(A) in this test will be prohibited from starting (except in **Special Stage Rallies** where a level of 100dB(A) is permitted) unless the **Official Document**s specify lower levels.

7.4. All measurements refer to the 0.5m test in Ch.7. Wherever practical the 2.0m test should be used for **Road** and **Targa Road Rallies**.

7.5. For **Vehicles** of Periods A to D there is a waiver from the requirement to use a sound meter on daytime **Event**s but **Driving Standards Observer**s for sound must be appointed.

7.6. The **Organiser**s must make arrangements for a suitable testing site to be available and ensure that adequate personnel are appointed.

7.7. A further sound test of the same **Vehicles** must be made on any road sections and these should be manned by a **Driving Standards Observer** and / or **Judge of Fact** appointed and named in the **Official Documents** and qualified to carry out their duties by experience.

7.8. The **DSO** have the authority to stop any **Vehicle** until it complies with relevant sound regulations.

8. Instructions to Competitors

8.1. In addition to the requirement of Ch.3 the **Official Documents** for the **Event** must clearly state:

a. The type of **Rally** (**Road** / **Navigational** / **Stage** etc) that is being organised and if there will be **Standard Sections**, **Special Stage**s, **Regularity Sections** or other types of **Special Test**.

b. When details of the route or any test or stage will be issued.

c. Any maps required (including their scale and issue reference and any modification of App.10 Art.7.42).

d. In any dispute concerning mileages these shall be calculated according to 1:50000 OS maps (or equivalent local maps).

e. Any modification of the **Event Regulations** in relation to **Pace Notes**, **Subjective Route** Notes or other means of giving **Competitor**s advice relating to the traversing of a **Special Stage**. (App.10 Art.7.42)

f. The type of timing to be used.

g. A reminder of which sub-sections of the **Technical Regulations** apply.

h. Whether or not **Vehicles** are required to be taxed and insured for use on the public highway.

i. Whether servicing is permitted and if so then the manner in which **Service Vehicles** must be identified by **Official Service Plates** affixed to the **Service Vehicle**.

j. Any information which is required in relation to checks established by the **Organiser**s to observe maintenance of a set speed and / or time schedule and / or route.

8.2. No oral instruction to **Competitors** during an **Event** will be valid if this affects the route the time schedule or the layout or performance of a **Stage** or test.

8.3. Any instruction concerning these aspects must be displayed as an **Official** notice at least 30 minutes before the first **Vehicle** is due to start or issued in writing to each **Competitor** who must acknowledge receipt in writing. The instruction and acknowledgment are **Official Document**s.

9. Documentation

9.1. All documentation issued by the **Organisers** is deemed an **Official Document** under the **NCR** and the **Route Card**, **Road Book** or **Time Card** must specify the following:

a. A description of each section (**Standard**, **Neutral**, **Transport Regularity** etc).

b. The time allowed to traverse the route between each time **Control** and all the information necessary to enable **Competitor**s to comply with it.

c. What information the **Organiser**s require to be recorded and the locations (**Control**s – see App.13) at which these records will be made except as provided for in Art.8.1.j. above

d. Which **Checks** will be manned by **Officials** except checks established in accordance with Art.8.1.j.. above

e. Which portions of the route will be timed to less than one minute.

f. Any 'out of bounds' areas to be respected.

g. The areas where the **Organiser**s require **Competitor**s to observe special driving restrictions (ie **Quiet Zones**).

h. The order in which **Controls** and **Checks** must be visited.

CHAPTER 13 RALLY

Appendix 2 - Duties and Responsibilities of Clerks of the Course for All Types of Rally

1. General

1.1. This Appendix must be read in conjunction with all applicable Appendices to this Chapter and Chapters 2 and 3 and 5.

1.2. In addition to organisational responsibilities the **Clerk** is the first **Judicial** body at an **Event** and accordingly is obliged to exercise that responsibility including the provisions of Ch.2. This responsibility may be delegated to a **Deputy Clerk**.

2. PART A – All Rallies

2.1. In addition to the duties detailed in Ch.5 the **Clerk of the Course** should ensure compliance with the following:

a. The organisation and **Regulations** for the **Event** must meet the requirements of the relevant **Statutory** Instruments.

b. Reasonable precautions must be taken in the selection of route, time of day, control of spectators and any other relevant factors to avoid inconvenience to the general public.

c. The **Organiser**s must familiarise themselves with the medical and ambulance facilities along the route.

d. Effective **Public Relations** work must be carried out in accordance with App.1 Art.6.1–6.4.

e. In farming areas **Event** details must be sent to the appropriate County Secretary of the **National** Farmers' Union and any similar **National** bodies.

f. The appointed **CAO Route Liaison Officer** (**RLO**) for each of the Counties and **National** Parks through which the route passes must be consulted about the draft route at least three months before the **Event** date and before submission to the **CAO**. This is particularly important when special public relations work in sensitive areas is required.

g. The **Route Liaison Officer** must also be consulted as above in respect of **Single Venue Stage Rallies** and all other **Rallies** whether using the **Public Highway** or not.

2.2. The **RLO** may:

a. Request the sight of all paperwork relating to the **Event** including **PR** sheets.

b. Request the **CAO** where applicable to suspend authorisation or the **ASN** to suspend the **Permit** until the route or the effectiveness of the **PR work** in his area has been confirmed.

c. Require the **Clerk of the Course** to order re-routes as appropriate to avoid areas of special concern.

d. Exercise discretionary judgement on where competitive sections may be run and their length and withhold agreement to the route if not satisfied with any aspect of the organisational standards or route planning.

e. Require the **Clerk of the Course** to order additional technical restrictions on **Vehicles** as appropriate in their area with the approval of the **ASN**.

2.3. Private property of any description must not be used without written permission from the landowner or authorised agent.

2.4. The necessary permission from Highway Authorities must be obtained in respect of all **Footpaths**, **Bridleways** and **Restricted Byways** that are used or crossed and any conditions laid down must be adhered to. These locations must be adequately marshalled by **Officials** who are well briefed and properly identified. One **Official** must be appointed for each such section to ensure that the **Event** is seen not

to inconvenience unduly members of the public. The **Official** must have a good working knowledge of the **Rights of Use** applying to the **Section**. Alternative routes for other **Rights of Way** users must be signposted. **Warning Notice**s in accordance with Ch.3 as appropriate and the **Safety Code** should be on display in all such areas.

2.5. Appropriate sanitation must be available throughout the route of the **Event** the locations of which must be communicated within **Event** documents. Particular consideration must be given to locations prior to **Special Stage**s and at **Service Areas** and **Rest Halts**. **Local** authority guidance is especially relevant in respect of the provision for Spectators. Further guidance is given in the **Stage Rally Safety Requirements**.

2.6. No person may drive more than 200 miles continuously without relief and there must be a prescribed rest period of at least one hour for each **Drive**r at intervals of not more than 200 miles.

2.7. Any **Event** that runs for more than 14 hours must unless previously agreed by the **ASN** have a rest halt of at least two hours.

2.8. Wherever **Competitor**s are on a **Public Highway** they must be controlled by a pre-determined speed schedule unless they are allowed to complete the **Event** in their own time. This schedule must not require or encourage **Drivers** to exceed any statutory limits where imposed or be considered dangerous or unreasonable in relation to prevailing traffic conditions and the nature of the route.

2.9. No time or speed schedule must be imposed which requires or encourages **Competitor**s while using a highway open to the public to achieve an average speed between any two points that exceeds the following limits:

a. 30mph for **Vehicles** in the case of all highways other than motorways. For sections run on minor roads under 4m wide during daylight hours (07.00 to 22.00 hrs) the average speed may not be greater than 20mph unless agreed by the **RLO**.

b. 60mph for cars in the case of motorways.

c. 25mph in the case of any **Vehicle** subject to a speed limit (such as vans).

d. 20mph for **Vehicles** on neutral sections (except on M A or B class roads).

2.10. There must be no bonus for exceeding the specified average.

2.11. **Competitor**s must be given in advance by **Official Document**(s) all the information necessary to enable them to calculate the speed that they are being asked to average (App.5).

2.12. The **Organiser**s may establish a check at any point for the purpose of observing maintenance of a set speed and/or time schedule and/or route provided that **Competitor**s are advised of these checks in the **Official Document**s and are given all the necessary information to enable compliance.

2.13. Where **Competitor**s are going onto a highway from private ground every practicable precaution should be taken to avoid depositing mud or soil on the highway.

2.14. The use of gated roads should be avoided if practicable but if **Competitor**s are to traverse a gated road then adequate arrangements must be made to ensure that all gateways are manned by **Marshal**s who must ensure that no **Competitor** is required to open a gate and that all gates are closed after the **Competition**.

2.15. Occupiers of land adjacent to the road must be advised before the **Competition**.

2.16. Except when used as **Special Stage**s the use of single-track roads should be avoided if practicable during daylight but if **Competitor**s are to traverse such roads the speed set must be lowered as appropriate.

2.17. Those sections of an **Event** involving difficult navigation by means of map references or a detailed route card must be scheduled so that no **Competitor** is traversing minor roads during the busy morning or evening hours unless the required average speed is not more than 20mph.

2.18. **Control**s must be sited at places where there is adequate room for **Officials**' and **Competitor**s' **Vehicles** to stop without affecting non-**Rally** traffic.

2.19. **Control**s must be sited at least 500m from occupied houses except where written approval has been obtained from the occupants.

2.20. All **Control**s must be clearly identified at the roadside (**App.5**).

2.21. **Control**s at which **Competitor**s are required to stop for the purposes of recording a time and which are on the public highway must not be less than two miles from any similar control.

2.22. **Competitor**s must be provided with all necessary regulatory information at or before their starting time.

2.23. **Competitor**s must be started on the road sections of a **Rally** at intervals of one minute and will leave the start in numerical order unless the **Official Document**s specify a longer time interval or a different order. **Road** sections prior to a **Stage** must be a minimum of five minutes regardless of distance.

2.24. **Event**s must provide additional road timing when utilising media interviews at **Stage** ends. A figure of one additional minute is recommended.

2.25. On **Road Rallies** reverse seeding is not permitted.

2.26. After a **Rally** has started the **Organiser**s must not accept any claim from **Competitor**s concerning either **Force Majeure** or baulking. Nonetheless the **Clerk of the Course** has the judicial discretion to disqualify any **Competitor** proven to have unreasonably baulked another (**Art.4.39 below)**.

2.27. Wherever possible the **Event** route should be checked for damage immediately before and after the **Event**.

2.28. The **Safety Delegate**, **Stewards** and **Observer**s (as appropriate to the **Event**) must be supplied with a complete marked map of the route before the date of the **Event** and must also be supplied with a set of all instructions and route cards that are issued to **Competitor**s and **Officials** as soon as they are available.

2.29. **Competition Licence**s should be signed proving that the holders completed the **Event** without adverse report. Signatures may be obtained by both the **Drive**r and the **Navigator** or **Co- Driver**.

2.30. The **Chief Timekeeper** appointed for the **Event** is responsible for issuing timing equipment and ensuring that the **Marshal**s are competent to use it.

2.31. The **Chief Timekeeper** must be able to deal with operational problems affecting timing equipment.

2.32. Any section of an **Event** that is timed to less than one minute must be timed by certified equipment digital clocks to **ASN** specification R(O/I)R or E/B recording clocks printing to seconds or automatic apparatus.

2.33. All official clocks or watches must be set to GMT / BST time.

2.34. Any official timepiece timing to the minute that is not within 15 seconds of GMT / BST time or any official timepiece timing to the second that is not within five seconds of GMT / BST time will be disregarded.

2.35. If competing **Vehicles** or service **Vehicles** are required to carry any identification markings the name of the **Organising Club**s must be incorporated except in **Single Venue Rallies** confined wholly to private property.

2.36. All **Official** bulletins, **Permit**s and authorisations, times and results (unless issued in accordance with **Ch.3**) must be published on an **Official Notice Board** whose location has been notified to **Competitor**s in the **Official Document**s for the **Event** (**Ch.5**).

2.37. At **Event**s where there are **Classes** for designated groups or categories of **Vehicle** suitable arrangements to undertake eligibility checks should be available before the **Competition** or at its conclusion.

2.38. Any **Event** with a **Class** or **Classes** exclusively for historic **Vehicles** as defined in the **NCR** (**Historic Special Stage Rallies**) must appoint a **Historic Grade Eligibility Scrutineer**. **Event**s with a **Class** or **Classes** exclusively for historic **Vehicles** as defined (**Historic Road Rally Car**s) may be required to appoint a **Historic Grade Eligibility Scrutineer** at the discretion of the **ASN**.

2.39. All modified / **Competition Vehicles** used as **Course** / **Safety Car**s on **Special Stage** and **Targa Road Rallies** must comply with the relevant **Technical** and **Safety Regulations**.

2.40. **Technical** and **Safety Regulation** checks may be carried out both before and during an **Event**.

2.41. The **Chief Scrutineer** must be available throughout the **Event** to ensure that the **Technical Regulations** are complied with.

2.42. When the **ASN Safety** and **Medical Radio** frequencies (81.575 and 81.5375MHz FM) are to be used

they must be operated in accordance with Ofcom and **ASN** licensing requirements (see Art.69.b. below). **Operational Guidelines** for the use of the **ASN Safety** and **Medical Radio** frequencies are issued to all **Radio Licence Holder**s and the **Radio Marshal**s **Handbook** is published on the **ASN** website.

3. PART B – Road Events

Additional Duties and Responsibilities of the **Clerk of the Course** are as follows:

3.1. Enforce the obligations of **Entrant**s under the **NCR** (Ch.6).

3.2. Ensure the relevant obligations of **Organiser**s under the **NCR** (Ch.3).

3.3. **Judges of Fact** may be appointed to adjudicate on:

a. Failure to stop at **Stop** or **Give Way** junction.

b. Failure to comply with the requirements of a **Test**.

c. False starts on tests or standard sections.

d. **Unauthorised** use of auxiliary lights.

e. **Unauthorised** possession of recorded notes, radio equipment or intercom (App.3).

f. **Unauthorised** servicing.

g. Excessive **Noise**.

h. Violation of out of bounds areas.

3.4. **Regional Associations** must be advised by **Event Organiser**s at least two months before all **Road Rallies** including **Navigation** and **Historic Road Rallies** take place within their area.

3.5. **Regional Associations** may appoint a **Driving Standards Observer** as an **Event Official** (Ch.5).

3.6. All other **Event**s may appoint their own **Driving Standards Observer**s (Ch.5).

3.7. **Driving Standards Observer**s will adjudicate on:

a. Excessive **Vehicle Noise** including exhaust induction and transmission sources (observed during the **Event**).

b. Excessive speed.

c. Driving in a manner likely to bring motor sport into disrepute.

d. Compliance with special restrictions e.g. **Quiet Zones**.

3.8. Any **Competitor** driving at an excessive speed or recklessly or in a manner likely to bring motor sport into disrepute or convicted of any driving offence committed during an **Event** may be **Disqualified**.

3.9. **Checks** operated by **Judges of Fact** or **DSO**s need not be manned for the whole period during which **Competitor**s may report and may operate on a random basis.

3.10. The **Official** in charge of any control or check may mark or withhold a **Competitor**'s **Route Card** or **Time Card** if a **Vehicle** has suffered damage to its exhaust system.

3.11. All **Timekeeper**s will be **Judge**s concerning time recorded.

3.12. For **Road Rally Event**s (as defined by **Permit**) and all **Event**s including **Special Test**s the **Chief Scrutineer** must be appointed from the list of **ASN Technical Officials** (NAT).

3.13. For all Road, Road Timed and Navigational Rally Events the Clerk of the Course must be Licensed by the ASN (**Chapter 5**)

3.14. Applicants for Road Rally Clerk of the Course Licence will only be considered if appointed by an Organising Club entitled to run such Events.

4. PART C – Special Stage Rallies

Additional Duties and Responsibilities of the **Clerk of the Course** are as follows:

4.1. For all **Special Stage Rallies** the **Clerk of the Course** must be licensed by the **ASN** (Ch.5).

4.2. Applicants for accreditation as **Stage Rally Clerk of the Course** will only be considered if appointed by an **Organising Club** entitled to run such **Event**s.

4.3. All other motor sporting users of **Venue**s to be used as **Special Stage**s must be notified of arrangements for using the **Venue**.

4.4. **Competitors** must be seeded as follows:

a. Numerically in order of anticipated performance with the first **Competitor** having the best performance potential

OR;

b. Only for **Multi-Venue Stage Rallies** in **Forestry**: Classes 9 to 13, Classes H1(a), H1 and H9 are permitted to run at the front of the field numerically in order of anticipated performance with the best performance potential at the front. All other **Classes** to run numerically in order of anticipated performance following a suitable time gap.

c. **ASN** reserves the right to give prior approval for other methods of seeding.

4.5. The **Chief Scrutineer** must be appointed from the list of **ASN Technical Officials**.

4.6. Ensure that a **Safety Plan** is produced in accordance with the **ASN Stage Rally Safety Requirements** and that all **Officials** involved in the running of the **Event** are aware of the plan and where appropriate have received training.

4.7. A **Stage Commander** should be appointed for every **Stage** with the responsibility for ensuring that the **Stage** complies with the regulations and that an adequate number of **Marshal**s are appointed.

4.8. **Marshal** locations should be selected so as not to place them in areas where they may be exposed to significant risk.

4.9. In allocating individual **Marshal**s to specific locations care should be taken to ensure that less experienced **Marshal**s are accompanied by experienced colleagues.

4.10. An **Event Safety Officer** must be appointed who is experienced in the current operation of **Special Stage**s and who understands the potential of **Rally Vehicles** in differing weather conditions.

4.11. The **Event Safety Officer** must be assisted by a Spectator **Safety Officer** who is responsible for specific arrangements to accommodate spectators in suitable areas, to prevent access to other areas and to make suitable access facilities for spectators' use.

4.12. The **Spectator Safety Officer** shall ensure that:

a. There should be a copy of the **Safety Code** on display at all entrances where the public are likely to enter.

b. All and any publication giving **Event** information online or in print whether published for spectators or **Officials** must include a copy of the **Safety Code**.

4.13. The **Event Safety Officer** is responsible for ensuring that there are effective arrangements to supplement the general marshalling strength organised by the **Stage Commander** as follows:

a. There must be pre-determined arrangements available to every **Stage Commander** for summoning appropriate emergency services via rendezvous points if necessary to the scene of an incident.

b. At each **Stage** unless the complete route is visible from the **Start** or **Finish** areas there must be provision of an effective radio communications network operated through a nominated **Controller**

under the direction of the **Clerk of the Course** linking **Officials** at **Start**, **Finish** and intermediate points with **Rescue** and **Medical Service**s. The frequency must be secure from misuse and be either the **ASN Safety** Frequency or a privately licensed frequency to Ofcom **Regulations**. The **Controller** must be experienced in the use of radios and in controlling a network and must ensure the disciplined use of the radios. Where the **ASN Safety** Frequency is used the **Radio Controller** must hold a valid **ASN Radio Controller**s **Licence**. Notes on radio procedure are available from **ASN**.

4.14. Written instructions on the operation of **Stage**s prepared in accordance with the **ASN Stage Rally Safety Requirements** must be made available to all **Officials** and **Marshal**s. These must clearly establish:

a. That the number of **Vehicles** to be sent through any **Stage** before the **Competition** shall be in accordance with the **ASN Stage Rally Safety Requirements**.

b. The crew of each **Safety Car** must have specific duties based on the current **ASN Safety Car** Roles and Responsibilities. On all **Multi Venue Rallies** at least two **Vehicles** of the **Safety Car** train must complete the entire route

4.15. No **Stage** must start until the **ASN Safety Delegate** or subsequent designated **Safety Car** crew where applicable has confirmed that it is ready for **Competitor**s and that the **Marshal**s have all spectators on the **Stage** under their control and direction (App.20).

4.16. There must be no movement of any **Vehicle** or of the **Rescue** services once the **Stage** has opened without the specific approval of the **Stage Commander** and then only after suspending the **Stage** and being satisfied that it is cleared of competing **Vehicles**.

4.17. On any **Special Stage** where extreme circumstances make it necessary to neutralise the **Competition** e.g. where spectator safety is compromised or to authorise the movement of non-competing or **Rescue Vehicles** the system of **Red Signal**s must be in place. These should be located at mid **Stage Rescue** points all locations where a **Rescue** / emergency **Vehicle** may re-enter the **Stage** following a shortcut and at each mandatory **Radio Point** (App.12). **Red Signal**s will be displayed at all mandatory **Radio Point**s preceding the incident only on the specific instruction of the **Clerk of the Course** or **Stage Commander**.

4.18. **Red Signal**s must be prominently displayed (held out steady not waved) by a designated **Marshal** who MUST wear a **Marshal**s' tabard.

4.19. **Red Signal**s shall measure a minimum of 60cm x 70cm.

4.20. **Competitor**s who have been shown a **Red Signal** will be given a notional time for the **Stage**.

4.21. The time of the deployment of the **Red Signal**s will be recorded and notified to the **Clerk of the Course**.

4.22. No **Signal** other than a **Red Signal** may be deployed at any point along the route of the **Special Stage**.

4.23. Under no circumstances will any **Vehicle** be allowed to drive in the reverse direction of the **Stage**.

4.24. Detailed emergency procedures and equipment which must be made available by the **Event Safety Officer**.

4.25. The priorities in dealing with an incident are to deal first with those who are injured (whether **Competitor**, **Official** or spectator) by removing them in a suitable **Vehicle** if it appears prudent to do so and then to deal with the **Vehicles** if they constitute a hazard to the continued running of the **Stage** or to property.

4.26. No **Competitor** will be permitted a re-run of a **Special Stage** (App.10).

4.27. The system of ensuring that **Competitor**s are positively monitored and checked through a **Stage** must be clearly stated in both the **Event Safety Plan**. For this purpose **Organiser**s may either use numbered **Stage Time Card**s or note the previous **Competitor**'s **Competition Number** with the next **Competitor** to leave the **Start**.

4.28. All non-competing **Vehicles** must be parked in an appropriate place at least 30m from a road used as a **Special Stage** between a point before the **Start** control and a point 100m beyond the **Finish** stop control.

4.29. Any non-competing **Vehicle** required solely for purposes of safety may be parked at any place designated appropriate by the **Stage Commander** and / or **Event Safety Officer**.

4.30. Any road that may form an escape between the start and stop **Control**s must be kept clear and unobstructed

for a distance of at least 100m bearing in mind the potential approaching speed of **Competitor**s.

4.31. The location of any competing **Vehicle** that fails to complete the stage must be reported to the **Stage Commander**.

4.32. The information required by the **Clerk of the Course** to consider Art.4.34–4.38 below must be available if the **Stage** is interrupted or stopped for any period of time.

4.33. Reasonable precautions must be taken to protect private property situated adjacent to any **Stage** against damage.

4.34. Should the normal running of a **Special Stage** be stopped after the passage of one or more **Competitor**s for any reasons whatsoever and it proves impossible to allow other **Competitor**s to cover the **Stage** competitively the **Clerk of the Course** may give to each crew which has not been able to cover the **Stage** in the normal manner a notional time corresponding to the slowest time set up to the moment of interruption.

i. Where a Competitor is unable to complete a Special Stage competitively due to a significant delay outside of their control, and there is satisfactory evidence to demonstrate the significant delay, the Clerk of the Course may give the crew a notional time relative to their performance during the event.

ii. Where there is evidence of the actual time lost as a result of the delay, the Clerk of the Course may give the crew an adjusted time. Where evidence of the time lost is not available, the Clerk of the Course may give the crew a notional time corresponding to the slowest time set prior to the crew completing the stage.

4.35. If it appears that the slowest time represents a complete anomaly the next slowest time may be retained (and so on until the 5th slowest time).

4.36. However no crew that is totally or partially responsible for stopping a **Stage** may benefit from this measure. If they finish the **Stage** they will be given the time that they actually set even if this is greater than the time awarded to other crews.

4.37. In the case of an **Event** being permitted to seed **Competitor**s in reverse order of anticipated performance the **Clerk of the Course** may give **Competitor**s a notional time corresponding to the fastest time set at the moment of interruption or apply the next fastest time (up to the 5th fastest time) if the fastest time represents a complete anomaly.

4.38. If the normal running of a **Special Stage** is red **Signalled** prior to any **Competitor**s completing that **Stage** competitively and where circumstances allow the stage to be re-started, the **Clerk of the Course** may give to each crew which has not been able to cover the **Stage** in the normal manner a notional time corresponding to the time set by the first following **Competitor** who completes the stage competitively after the interruption, however if this time represents a complete anomaly, the next **Competitor**'s time may be retained (and so on until the 5th recorded time following **Stage** re-start).

4.39. The **Clerk of the Course** has discretionary powers to impose a penalty in accordance with App.8 (gg) or App.14 (gg) on any **Competitor** who causes or is part of a serious blockage on a **Special Stage** whether intentionally or otherwise if their actions prevent any other **Competitor** from completing the **Stage** competitively. The **Clerk** can also impose further penalty under Ch.2 as appropriate.

4.40. **Judges of Fact** may be appointed to adjudicate on:

a. Failure to comply with the **Medical Requirements** specified in Ch.6 (App.2).

b. Failure of **Competitor**s to comply with Specific **Regulations**

c. Failure to comply with the prescribed route requirements at App.10 Art.7.27–7.35.

d. False starts on **Special Stage**s.

e. **Unauthorised** use of auxiliary lights.

f. **Unauthorised** possession of pace notes or radio equipment (App.10 Arts.7.1–7.3 and App.10 Art.7.42-7.44).

g. **Unauthorised** servicing.

h. **Unauthorised** smoking.

i. Excessive **Vehicle Noise** (observed during the **Event**).

j. Violation of out of bounds areas.

k. Violation of the regulations regarding crash helmets seat belts or flame-retardant overalls.

4.41. **Driving Standards Observer**s may be appointed to adjudicate on:

a. Excessive **Vehicle Noise** (observed during the **Event**).

b. Excessive speed.

c. Driving in a manner likely to bring motor sport into disrepute.

4.42. **Checks** operated by **Judges of Fact** or **DSO**s need not be manned for the whole period during which **Competitor**s may report and so may operate on a random basis.

4.43. **Organiser**s should include in their **Official Document**s the following notice to **Competitor**s:
Judges of Fact *and / or* **DSO***s will be appointed to report on noise levels. Excessive noise will include instantaneous occurrence of noise such as but not exclusively that produced by backfiring caused by anti-lag systems. The penalty for excessive noise may go as far as* **Disqualification***.*

4.44. Any **Competitor** driving at an excessive speed or recklessly or in a manner likely to bring motor sport into disrepute or who is convicted of any driving offence committed during the **Event** may be **Disqualified**.

4.45. The **Official** in charge of any **Control** or Check may mark or withhold a **Competitor**'s **Road Book** or **Time Card** if the **Vehicle** concerned has suffered damage to its exhaust system.

4.46. The **Clerk of the Course** can appoint **Officials** empowered to search **Competitor**s and their **Vehicles** for **Unauthorised Pace Notes**.

4.47. There should be two such **Officials** one male to check male **Competitor**s and one female to check female **Competitor**s.

4.48. An **Organiser** may permit the supply of subjective route notes. This must be stated in the **Official Document**s and the subjective route notes must be prepared by a **ASN** registered supplier.

CHAPTER 13 RALLY

Appendix 3 - Specific Regulations for Road Events

1. General

1.1. This Appendix must be read in conjunction with all applicable Appendices and in particular App.1 and App.9.

1.2. The following definitions and regulations apply.

2. Road Rally

2.1. A **Rally** in which **Competition** on the **Public Highway** does not qualify for an alternative category and in which marking for maintaining a time schedule forms a substantial part of the **Competition**.

3. Historic Road Rally

3.1. As **Road Rally** but participation is limited to **Vehicles** complying with the appropriate **Technical Regulations** for **Historic Category** 1, 2, 3 and 4 **Road Rally Vehicles** App.15 and 17.
Must comply with the following:

a. **PR** work in accordance with App.1 Arts.6 must be carried out.

b. **Classes** must be based on the ability of **Competitor**s (masters, experts, non-experts and novices). and/or by age and cubic capacity of the vehicles entered.

c. Written **ASN** approval must be obtained for any **Special Tests**. Detailed diagrams and written explanations of their format and finishing procedures must be submitted. These tests must be designed so that no **Competitor** can be expected to exceed an average speed of 30mph. No benefit should accrue to any **Competitor** who exceeds 30mph. Test finishes must be arranged in such a way that there can be no possibility of any **Competitor** completing a test whilst a previous **Competitor** blocks the **Finish** area.

4. Navigational Rally

4.1. A **Rally** designed to test the navigational skill of the crew. **Navigational Rallies** must additionally comply with the following:

a. **Classes** must be based on the ability of **Competitor**s: for example, masters, experts, non-experts and novices.

b. Must not include any **Vehicle Classes** whether by capacity or by group.

c. Except for **Novice Crew**s (as defined in the **Official Document**s) only the following information may be issued to a **Competitor** before their due start time:

i. **Rejoin Points**
ii. Main **Time Control**s
iii. Blackspots and
iv. the location of the **Finish**.

d. Information in a sealed opaque envelope is not considered issued until the envelope is opened.

e. Except for **Novice Crew**s (as defined in the **Official Document**s) no more than 15% of the **Time Control**s may be issued to **Competitor**s as **Rejoin Points**.

f. **Rejoin Points** may only be located at the end of **Neutral Section**s.

g. **Vehicles** must comply with the **Technical Regulations** in respect of silencing and permitted **Noise** levels including mandatory fitment of induction filter elements (App.15 Art.12.2).

h. **Vehicles** must comply with the **Electrical Systems** provisions of the **Technical Regulations** (App.15 Art.5).

i. **Vehicles** must comply with the **Miscellaneous** provisions of the **Technical Regulations** (App.15 Art.6).

5. Veteran Rally (or Run)

5.1. A **Rally** or **Run** restricted to **Vehicles** built before 1st January 1919.

6. Vintage Rally (or Run)

6.1. A **Rally** complying with one of the above categories and restricted to **Vehicles** built in Periods A to D (Non- **Rally**). The category must be indicated in the title of the **Event** (i.e **Vintage Twelve Car**).
Must comply with the following:

a. Subject to compliance with the below 7.b. and c. **Economy**, **Navigational** or **Vintage Rallies** will be required to carry out **Public Relations** work in accordance with App.1 Arts.23 – 26.

b. **Penalties** for both early or late arrival must be imposed at all controls. These penalties must be at least as great for early arrival as late arrival.

c. Other than for **Regularity Sections** and **Special Tests** they must not have any section times to less than one minute.

7. Economy Rally

7.1. Designed to assess the fuel economy of **Competitors**' **Vehicles** and in which the overall results are based on the relative fuel consumption of the **Vehicles**.
Must comply with the following:

a. **Penalties** for both early or late arrival must be imposed at all controls. These penalties must be at least as great for early arrival as late arrival.

b. Other than for **Regularity Sections** and **Special Tests** must not have any **Section** timed to less than one minute.

c. Subject to compliance with the above **Economy Navigational** or **Vintage Rallies** will be required to carry out **Public Relations** work in accordance with App.1 Arts.6.

8. Twelve Car Rally

8.1. A **Rally** that complies with one of the above categories and which falls within the provisions of automatic authorisation under the Motor **Vehicles** (**Competitions** and **Trials**) **Regulations** (where applicable). The category must be indicated in the title of the **Event** (i.e **Economy Twelve Car Rally**).
Must comply with the following and **Twelve Car Rallies** that do not meet these requirements are not not permitted:

a. Must be run according to the requirements of an **Economy**, **Navigational** or **Vintage Rally** and be described in this way in the **Official Documents**.

b. Any section defined as a **Standard Section** may not be timed to less than one minute (App.4 Art.4.1).

c. Must not form part of any **Championship** other than one restricted to bona fide members of the **Organising Club**.

d. A Route Liaison Officer (**RLO**) must be consulted.

e. If the **RLO** requires additional **PR** work in sensitive areas this must be completed to the **RLO** satisfaction.

f. Must not be scheduled to run between 18.00 hours on a Saturday and 07.00 hours on a Sunday unless written permission has been given by the **RLO** and advised to the **ASN**.

g. Should normally be run mid-week and in the early evening.

9. Navigational Scatter Event

9.1. A **Navigational Event** where there is no **Competition** on the **Public Highway** and which falls within the provisions of automatic authorisation under the Motor **Vehicles** (**Competition** and **Trials**) **Regulations** (where applicable).
Must comply with the following:

a. **Public Relations** work must be carried out according to App.1 Arts.6

b. The **Official Document**s should clearly define the nature of the **Event** and specify all **Navigational** equipment required.

c. An estimate of the mileage likely to be covered must be included in the **Official Document**s.

d. The points to be visited must be placed so that there is no single obvious route.

e. **Competitor**s should have a completely random choice concerning order of visit and must not be required to visit more than 75% of the points listed.

f. They must be planned in such a way that the **Competitor**s have ample time to attempt to visit the required number of points. The majority of the points should not be readily accessible without leaving the **Vehicle**. The **Vehicle** should be an incidental means of transport between the various points.

g. There should be no element of timing on the **Public Highway** although **Competitor**s may be required to finish by a specified time.

10. Targa Road Rally

10.1. A schedule timed **Rally** where the principal **Competition** comprises the **Competitor**'s performance on **Special Tests** where the marking for maintaining a time schedule forms a part of the **Competition**.
Must comply with the following:

a. Not include and **Standard Section**s

b. **Regularity Section**s may be included

c. **Classes** must be based on the ability of **Competitor**s (masters, experts, non-experts, and novices) and may be sub-divided by **Vehicle** cubic capacity and / or age.

d. **Special Tests** must comply with the **Special Tests** provisions of App.4 Arts.8 to this Chapter.

11. Endurance Road Rally

11.1. A **Road Rally** where a substantial proportion of the **Competition** takes place on the **Public Highway** timed to the minute and which shall also include **Special Tests** on private property which may be timed to the second.

12. All Events

12.1. **Road Safety Event**s and any other form of **Event** that use the **Public Highway** must comply with the following:

a. Must not include any **Special Stage**s.

b. Except for **Road**, **Historic Road**, **Enduro**, **Targa** and **Navigation Rallies** they must not include any **Special Tests**.

c. **Competitor**s must not carry any form of Intercom (ie any method of voice amplification) or any radio transmitting device. Exceptionally mobile telephones are **Permitted** if the **Official Document**s specifically allow them. Failure to conform will be penalised by **Disqualification** from the **Event**.

d. No regular assistance organised in advance may be used by **Competitors** in **Rallies** defined in Arts.2 above inclusive except when **Permitted** in the **Official Documents** for **Vintage** or **Veteran Event**s.

e. No assistance may be expected from the **Organisers**.

f. **Competitor**s are responsible for ensuring that they are supplied with fuel, oil, water etc. even though the **Organiser**s may advise where these supplies may be obtained.

g. A **Vehicle** may not be moved other than by its own power except:

   i. By a ferry.

   ii. By outside means for a minimum distance necessary to extricate it from difficulty.

   iii. By gravity.

   iv. By its crew.

h. **Competitor**s are strongly recommended to carry a **First Aid Kit**, high visibility vests or jackets and a torch.

i. The use of in car cameras is forbidden. Breach of this **Regulation** will result in **Disqualification** from the **Event**.

j. **Organiser**s must not sanction encourage or facilitate the filming of **Event**s taking part on the **Public Highway**.

CHAPTER 13 RALLY

Appendix 4 - Road Events – Routes and Sections

1. General

1.1. This Appendix must be read in conjunction with all applicable Appendices.

2. Routes

2.1. A **Road Rally Route** is the **Route** provided by the **Organisers** and conforming with the **NCR**.

2.2. The only route information that may be given out before the **Competitors**' due start time will be information regarding **Quiet Zones**, **Black Spots**, **Rejoin Points** and **Neutral Section**s. Exceptionally for **Road**, **Targa** or **Historic Road Rallies**, and only if the **Official Document**s **Permit**, other route information may be given in advance for those parts of the route that take place between the hours of 07.00 and 22.00.

2.3. The location of all **Stop** and **Give Way** junctions along the route must be issued to **Competitors** along with clear instructions as how they must treat them (**Art.2.5** below).

2.4. **Organisers** must identify any other junction at which **Competitors** are required to stop.

2.5. **Competitors** must stop before entering any road protected by a **Stop** junction or a **Give Way** junction where any part of the **Event** is held between 22.00 and 07.00 hrs. Failure to comply will be penalised by **Disqualification** from the **Event**.

2.6. Exceptionally and only with the specific permission of the **RLO**, **Give Way** signs in **Quiet Zones** may be negotiated according to the **Highway Code**. All such junctions must be advised to **Competitors** in advance.

2.7. Only 1:50,000 scale OS maps may be used.

2.8. The only information that can be added to the OS map as sold is:

a. Highlighting numbers, words and legends printed on the map within the confines of the outer printed grid numbers.

b. Highlighting and repeating grid lines and numbers and marking adjacent map numbers outside the of the outer printed grid numbers.

c. Information provided by the **Organisers** of the **Event**.

2.9. The onus of following the correct route rests with the **Competitor** who must visit **Control**s and **Check**s in the order set out in the **Time Card** or **Route Card** unless otherwise specified.

2.10. Any **Control** or **Check** (**App.5**) is deemed to extend for 50m around the actual point at which **Officials** are making their records or where a **Code Board** is situated and that point should be preceded by a **Control Board** 50m in advance.

a. If a different area is specified, the preceding **Control Board** may be sited accordingly. The location of any such **Control** or **Check** with a differing area must be provided to **Competitors** in advance.

b. **Code Boards** which are clearly visible for more than 100m when approached from the correct direction, or for which **Organisers** are using existing road signage, are exempt from this requirement.

c. Regularity Intermediate **Time Controls** (**Art. 6.2**) and **Checks** operated by **Judges of Fact** established in accordance with **Ch.13 App.2 Art.3.3** are exempt from these requirements but must be clearly identified to competitors approaching them from the correct direction.

d. An example of all **Official Boards** must be on display at **Signing On** for the **Event**.

2.11. The direction of approach to a **Control** or **Check** will be specified by the route information. Approaching a manned control from any other direction or visiting a **Control** or **Check** more than once will involve a **Penalty** (**App.7A, App.7B and App.8**).

2.12. No private road must be used by **Competitors** unless specific permission to do so has been given by the **Organisers**.

2.13. **Quiet Zones** – may be defined by the **Organisers** to traverse locations with PR concerns. **Competitors** must pass through in as high a gear as possible to minimise noise, without the use of auxiliary lights (except as permitted by relevant law when driving in fog or falling snow), and complying with any other instructions given by the **Organisers**.

a. Any **Quiet Zone** in a **Standard** or **Regularity Section** must be monitored by a **Driving Standards Observer.**

b. The start and end of all **Quiet Zones** must be clearly indicated. **Organisers** may achieve this by placing their own **Boards** or using existing road signage. The method of indication must be clearly communicated to all **Competitors** and, where **Organisers**' own **Boards** are used, examples should be displayed as per **Art.2.10.d.**

c. The locations of all **Quiet Zones** must be provided to all **Competitors** in advance.

3. Sections

3.1. The following terminology and restrictions apply to all **Road Rally Section**s and no other title or description will be valid.

3.2. No **Section** will have a **Flying Finish Time Control**.

3.3. No **Section** will have any award for **Competitors** who equal or improve upon the **Section** time schedule or record the fastest times or least penalties on any **Section**.

3.4. At the start of any **Section** or **Special Test** held in whole or in part on private property the **Organisers** must provide a **Medium Spill Kit**.

4. Standard Sections

4.1. A **Standard Section** may not use the same stretch of road more than once nor include any intermediate **Time Control**s. Where a **Standard Section** is timed to the second it must not:

a. Pass through any area that has more than 20 occupied dwellings within 300m radius of the route unless written agreement is given by all the householders within that area and the **ASN** has given its permission.

b. Join or cross any A-class road except where there is a manned control at which **Competitors** must stop at the junction.

c. **Start** on or use an A-class road for more than 200m continuously.

d. **Start** the first car before 23.59hrs and the last car including any lateness must finish ½ hour before sunrise.

e. Include any area or point where **Competitors** are required to observe special restrictions as to their driving behaviour except for observing signs warning of natural hazards. **Quiet Zones** or other restrictions are specifically forbidden.

4.2. **Organisers** may erect signs warning of natural hazards but they must be removed after the **Event**s.

4.3. Standard Sections must not include any road with a speed limit of 40mph or lower without the express permission of the RLO.

4.4. **Standard Sections** must not require **Competitors** to average more than 30mph.

4.5. If timed to less than a minute then **Standard Section**s must not include more than 250m of private property other than **Footpaths** and **Bridleways** and **Restricted** Byways for which approval has been granted by the landowner and the **Highway Authority** where appropriate.

5. Neutral Sections

5.1. A **Neutral Section** must be used to take **Competitors** through a **PR**-sensitive or densely populated area.

5.2. Must be completed by **Competitors** without the use of auxiliary lighting except as permitted by law in conditions of poor visibility. **Organisers** must remind **Competitors** of this requirement in their **Official Document**s.

5.3. **Neutral Section**s must not:

a. Be timed to less than one minute.

b. **Permit Competitors** to make up time on the public road.

c. Have any lateness **Penalty** applied except for **Maximum Lateness**.

d. Have an average speed of more than 20mph except on M, A or B class roads.

6. Regularity Sections

6.1. The locations of the **Start** and **Finish** of **Regularity Section**s must be given to **Competitors** in advance.

6.2. Each **Regularity Section** must contain at least one **Intermediate Time Control** the location of which must not be given to **Competitors** in advance.

6.3. **Competitors** must be advised in writing before entering such a section whether they are required to stop at **Intermediate Time Control**s which should be identified by a control board.

6.4. Adherence to the time schedule in a **Regularity Section** will be assessed by comparing the time of arrival at any **Intermediate Time Control** or the **Finish Time Control** with the time of arrival at the immediate preceding **Time Control**. Timing whether or not the **Vehicle** is required to stop will be at the moment of the **Vehicle** entering the relevant **Time Control** area.

6.5. **Penalties** must be specified in the **Official Document**s and must be imposed for stopping within sight of but outside the control area of any **Intermediate Time Control** and the **Finish Time Control**.

6.6. **Competitors** should not be required to maintain an average speed in excess of 30mph.

6.7. May only be included in the following rallies as defined by **Permit**:

a. **Historic Road**

b. **Endurance Road**

c. **Targa Road**

d. **Navigation**

e. **Veteran**

f. **Vintage**

g. **Economy**.

6.8. **Consistency Tests** may only be run under a **Historic Road Rally Permit** and at a **Venue** with a current **ASN** Track **Licence**. Written **ASN** approval must be obtained before the **Event**s for all **Consistency Tests** by submitting detailed diagrams and written explanations of their format and finishing procedures.

7. Transport Sections

7.1. A **Transport Section** is used to transport **Competitors** between other types of section where the route is not **PR** sensitive or densely populated.

7.2. These **Section**s must not be timed to less than one minute nor less than four miles in length and must not have any lateness penalty applied other than for maximum lateness.

7.3. They must comply with **App.5 Art.5.19** and breach of this **Regulation** will be penalised in accordance with **App. 7A (I)**, or **App. 7B (I)** for **Historic Road Rally Events.**

7.4. If using roads where a 30mph or 40mph limit is in force then a lower average speed must be imposed

depending on the proportion of restricted roads in the **Section**.

8. Special Tests

8.1. Written **ASN** approval for any **Special Tests** must be obtained before the **Event**s by submitting detailed diagrams including all roads on the test venue, distances between manoeuvres, overhead images of the land being used, written details of the terrain being used and WhatThreeWords locations for the **Test Start** and **Test Finish** in addition to explanations of their format and finishing procedures before the **Event**.

8.2. These tests must be designed so that no **Competitor** can be expected to exceed an average speed of 30mph or 40mph for **Endurance Road Rallies**.

8.3. No benefit must accrue to any **Competitor** who exceeds this speed.

8.4. **Test** finishes must be arranged so that there can be no possibility of a **Competitor** completing a test whilst a previous **Competitor** blocks the **Finish**.

8.5. **Flying Finishes** are not permitted. **Stop** lines must be clearly defined on route instructions and with stop boards on the test. The board must have minimum dimensions of 76cm x 61cm.

8.6. **Vehicles** must comply with the relevant Technical **Regulation**s appropriate to the type and or class of **Vehicle** (App. 15).

8.7. **Passengers** may not be carried in the rear seats of open **Vehicles**.

8.8. **Rallies** with **Special Tests** may not permit **Vehicles** of commercial type such as vans / pickups.

8.9. **Tests** must be designed and laid out to ensure **Vehicles** are not able to be driven towards each other. See the **Club Toolkit** for further guidance on this.

8.10. For all Events utilising **Special Tests**, fire extinguishers (minimum 5kg total capacity in units of not less than 2kg) must be available at each **Test** finish.

8.11. **Road Rallies** with Standard Sections timed to an accuracy of less than a minute may include one **Special Test** at the start of the itinerary and one additional **Special Test** at the same location, which the first **Competitor** must start no earlier than midnight, and all **Competitors** must complete before 03:00.

CHAPTER 13 RALLY

Appendix 5 - Road Events - Controls and Timing Including Results

1. General

1.1. This Appendix must be read in conjunction with all applicable Appendices.

2. Controls Documentation

2.1. All documentation issued by the **Organisers** have the same force as the **Official Document**s. Along with the requirements of Ch.3 Art.21 the **Route Card** or **Time Card** must specify the following:

a. A description of each section (**Standard, Neutral, Transport, Regularity** etc).

b. The time allowed to traverse the route between each time **Control** and all the information necessary to enable **Competitor**s to comply with the average speed limits applicable to the entire **Route** including those provided by the **Official Document**s.

c. What information the **Organisers** require to be recorded by **Competitor**s and the location of **Control**s (but not **Route Check** recorded by **Competitor**s and the location of **Control**s (but not **Route Checks**) at which these records will be made.

d. The location of check points established by the **Organisers** to observe **Competitor** maintenance of a set speed and / or time schedule and / or **Route** will not be disclosed but **Competitor**s must be notified in the **Official Documents** of the fact of such check points being deployed so as to enable compliance.

e. Which checks will be manned by **Officials** except checks established in accordance with c. above.

f. Which portions of the route will be timed to less than one minute.

g. Any 'out of bounds' areas to be respected.

h. The areas where the **Organisers** require **Competitors** to observe special driving restrictions (ie **Quiet Zones**).

i. The order in which **Controls** and **Checks** must be visited.

2.2. **Control**s checks and test sites must open at least 15 minutes before the due time of arrival of the first **Vehicle** and close 30 minutes after the due time of arrival of the last **Vehicle** unless the **Official Documents** specify otherwise.

2.3. The **Official Documents** will specify what penalties will be applied for stopping within sight of any **Control** and for early or late arrival at any **Control** on a **Regularity Section**.

2.4. Timing related penalties are provided at App.7 for **Road Scheduled Time Events** and at App.8 for **Road** Target **Timed Events**. **Organisers** acting through the relevant **Judicial** body may also apply penalties pursuant to Chapters 2 -5 of the **NCR**.

2.5. If at any **Control** or **Check** due to be operated by **Officials** the **Officials** are not present during the whole period when the **Competitors** may report then all performances at that point will be ignored in compiling the results except where the **Check Control** is operated by an appointed **Judge of Fact** or **DSO** when **Check Control** may be operated on a random basis.

2.6. All performances will be ignored if a **Control** or **Check** is not sited at the location specified in **Official Documents.**

2.7. The onus of ensuring that all the information required is clearly and legibly recorded at the appropriate time and place rests with the **Competitor**.

2.8. Should any entry on a **Time Card** not be legible or not appear authentic it can be considered not to have been made.

2.9. **Organisers** must refer to **Marshals**' check sheets in case of doubt.

2.10. If there is a discrepancy between the time allowance shown by the **Organisers** on a **Time Card** and that shown on any other document then the **Time Card** value will be taken to be correct unless previously amended in an official bulletin.

2.11. It is an offence for any **Competitor** to continue in an **Event** until the information required to achieve conformity with the **Event** time / speed schedule is provided by the **Organisers** in **Official Document**s.

3. Types of Control or Check

3.1. Route Check

a. An unmanned **Check** to prove a **Competitor's** adherence to the correct route.

b. Proof of passage will entail the **Competitor** recording the symbols from a **Code Board** that is to be placed facing oncoming **Rally Vehicles** or at parallel to the road when afforded line of sight of more than 50 metres.

c. The **Code Board** will be not less than 315 sq cm and will show not more than five black numbers or letters (or a combination of both up to a maximum of seven) and be the right way up on a contrasting background.

d. The size of the letters and numbers will be not less than 7.63cm with a minimum of 1.27cm stroke width.

3.2. Passage **Control**

a. A manned **Control** established to prove a **Competitor**'s adherence to the correct route.

b. It cannot be located less than 500m from any other manned **Control**.

c. The only information permitted to be recorded is the **Marshal's** signature or stamp and the authentication of the records held by the **Competitor**.

3.3. Time Control

a. A manned **Control** established to record the time of a **Competitor** who must come to a stop for the purpose.

b. It can additionally record the direction of approach and departure of the **Competitor**.

c. The only other information permitted to be recorded by the **Marshal** is the authentication of the records held by the **Competitor**.

d. These records to be valid must be signed by the **Marshal** with the **Competitor** not being required to make any entry on the **Time Card**.

3.4. Main **Time Control**

a. **Organisers** may designate certain **Time Controls** (Art.3.3 above) such as **Start Controls** and **Restart Controls** as Main **Time Controls** (**MTCs**).

b. **Competitor**s failing to visit or reporting outside their **Maximum Lateness** at **MTCs** will be considered to have retired.

c. Early or late arrival or departure will be penalised in accordance with App.7.e or f.

3.5. Stop / Go Control

a. A manned **Control** where **Competitors** are required to stop in line with at least a pair of course markers. **Crews** must not be held they should stop and then be immediately 'released' by the **Marshal** when safe to do so.

4. Timing

4.1. All **Sections** must be timed according to the requirements of **Scheduled Time** by watches that read to correct GMT / BST time of day.

5. Definitions for Scheduled Timing

5.1. **Standard Time** is the time of day a notional **Competitor** number zero would be due at any **Control** or **Check**.

5.2. **Scheduled Time** is the actual time of day each **Competitor** is required to be at any specific point.

5.3. **Scheduled Time** can be calculated for any point by taking a **Competitor's Competition Number** multiplying by the time interval between **Competitors** at the start and adding the result to the standard time at that point.

5.4. **Delay Allowance** is an allowance free of **Penalty** granted to specific **Competitors** following a delay under the instructions of an authorised **Official** of the **Event**. Any **Delay Allowance** must be recorded in writing on the **Competitor's Time Card** by that **Official**.

5.5. **Due Time** is the time a **Competitor** is due at any **Control** or **Check** inclusive of any previous lateness.

5.6. **Penalised Time** is the difference between **Due Time** and an earlier or later arrival time.

5.7. **Penalty Free Lateness** allows a **Competitor** late at one **Control** to be an equivalent amount late at a succeeding **Control** without incurring further **Penalty**.

5.8. Outside Total **Lateness** (OTL) is the point where a **Competitor** is considered not to have visited a **Control** or **Check** being more than 30 minutes past the **Scheduled Time** (including any **Delay Allowance**) unless the **Official Documents** specify a different period.

5.9. The time of arrival at or departure from a **Control** other than intermediate and final **Control**s of **Regularity Sections** (where **App.4 Art.6 apply**) will be the time at which the **Time Card** is presented by the **Competitor** concerned providing all crew members and **Vehicles** are within the **Control** area.

5.10. Exceptions to **Art.5.9** above are:

a. In the **Event** of a competing **Vehicle** obstructing other **Competitors** through being halted or unduly slowed down near a **Control** the **Officials** may instruct the Driver to proceed and may then record the time as the time when this instruction is given.

b. In the **Event** of a **Competitor** presenting a **Time Card** to **Officials** at a time when the **Vehicle** is outside the **Control** area the **Officials** have discretion as to whether or not to make a record on the **Time Card**.

5.11. The onus of presenting the **Time Card** rests with the **Competitor**.

5.12. The time of reporting at **Controls** will be recorded to the preceding whole minute when penalties are imposed per minute (for example nine minutes 59 seconds will be recorded as nine minutes.)

5.13. When a **Penalty** is imposed for timekeeping error of less than one minute the time will be recorded to the preceding second.

5.14. Where a **Control** at the end of a **Section** timed to the second also forms the start of a **Section** timed to the minute the time of departure will be considered as being the same as arrival but ignoring any seconds.

5.15. The **Organisers** can require any **Competitor** who is late to reduce their lateness by either foregoing or reducing any period of time provided for remaining at a **Control** or official halt.

5.16. **Competitors** may themselves reduce lateness without **Penalty** in the following ways providing the **Section** is not defined as **Neutral** and unless either forbidden to do so by the **Official Documents** or if by so doing they commit a breach of **Art.5.19** below:

a. By reporting at any **Control** following one at which a penalty was applied for lateness at any time not earlier than **Scheduled Time**.

b. By missing a **Control** or **Controls**. The **Competitor** will be penalised in accordance with **App.7 (a) or (b)** for every **Control** missed. On rejoining the route at a **Control** at the end of **Standard Section** the **Competitor** will be permitted to restart without further **Penalty** at any time between their original **Scheduled Time** and their **Maximum Permitted Lateness** in relation to their original **Scheduled Time**. If the rejoining **Control** is at the end of a **Neutral Section** and the **Competitor** has missed the **Control** at the beginning of a **Neutral Section** they will only be permitted to restart without further **Penalty** at their official corrected time based on the time of arrival at the last **Control** visited within **Maximum Lateness**.

5.17. If the need arises for an **Organiser** to extend **Maximum Permitted Lateness** this can only be done at a point on the route at which **Competitors** are required to report to avoid **Disqualification**. **Maximum Permitted Lateness** can then only be extended for the following part of the route and cannot be applied retrospectively for earlier **Sections**.

These provisions are subject to standard condition 4 of the **Motor Vehicles** (**Competitions** and **Trials**) **Regulations** where applicable.

5.18. No **Penalty Free Lateness** or official delay allowance that has been either reduced or foregone as permitted by **Art.5.15** above can be reclaimed. However, this does not exclude fresh claims based on new circumstances.

5.19. A **Competitor** found to have traversed a distance greater than four miles between two consecutive time **Controls** in less than three-quarters of the time specified by the official time schedule will be penalised in accordance with **App.7A Art.1(l)**. In calculating the penalty any fraction of minute will be ignored. The ¾ rule does not apply to sections of less than 8 minutes scheduled duration.

This **Regulation** does not preclude the **Organisers** providing specific sections for time recovery. For example:

- In a nine-minute section a **Penalty** is imposed if a **Competitor** completes a **Section** in less than six minutes.
- In a 10-minute section – seven minutes.
- In an 11-minute section – eight minutes.
- In a 12-minute section – nine minutes.

5.20. **Times** will be recorded to whole minutes unless the **Official Documents** state otherwise.

a. Any portions of the **Event** to be timed to seconds will be clearly indicated in the **Route** or **Time Cards**.

b. Any timing to less than one minute will be recorded on equipment as detailed in **App.2 Arts.2.30–2.34**.

5.21. **Competitors** will be timed by the official timepieces in the charge of **Officials** unless the **Official Documents** state that watches carried by the **Competitors** can be used.

5.22. If **Competitor's** own watches are used they must be of a size and type to enable the dial to be read clearly and must be sealed.

a. The requirements for sealing watches must be stated in the **Official Documents**.

b. The **Organisers** may reject any watch that cannot be satisfactorily sealed or read.

c. If any sealed watch varies from **Official Time** by more than one minute the **Competitor** concerned will be timed by official clocks from then on unless the **Official Documents** make provision for the replacement or re-setting of the watch concerned.

6. Results

6.1. To be classified as a finisher the **Competitor** must report to all Main **Time Controls** and unless otherwise stated in the **Official Documents** at least two-thirds of the **Controls** listed in the **Route Card** or **Time Card**.

6.2. The **Competitor** must report to the final **Control** if that is not an **MTC** and within the **Maximum Lateness**

specified and with the same crew in the same **Vehicle** in which that crew started.

6.3. **Competitors** at the conclusion of their **Competition** must sign a declaration to the effect that they have not been involved in any incident that may have caused damage to persons or property or alternatively give details of any such incident. Non-compliance will be penalised by **Disqualification** and must be reported to the **ASN** for further disciplinary action.

6.4. **Competitors** who retire will be required to submit a form to the **Event Secretary** within 72 hours of the **Event**. Failure to return a form may result in a fine of up to the relevant maximum permitted under the **NCR**.

6.5. For the purposes of considering **Disqualification**, **Vehicle** damage will be considered as being any tear or indentation exceeding 50mm in depth occurring to the external surfaces of the coachwork or its accessories (excluding windscreens windows lamps and bumpers) above the horizontal plane at the wheel centre.

6.6. Competitors will start with zero fails and/or time penalties. Classification will be made from Competitors who have incurred the least number of fails.

a. Competitors who have incurred an equal number of fails will be classified by reference to total time penalties accumulated.

b. In the event of a tie the Competitor who has completed the greater portion of the Competition from the Start including Tests (if any) without Penalty (or if both incurred Penalty at the same point then with the lesser Penalty) will be judged the winner unless another method of resolving ties is specified in the Official Documents.

CHAPTER 13 RALLY

Appendix 6 - Exemption of Permit Events

1. General

1.1. This Appendix must be read in conjunction with all applicable Appendices.

1.2. This Appendix applies to all of:

a. **Road Safety Event**s and

b. **Treasure Hunts** and

c. **Veteran Car Rallies** (or **Runs**) and

d. **Economy Run**s.

2. Road Safety Events

2.1. Must comply with the following:

a. They must not have a route which exceeds 150 miles on the **Public Highway** except in special circumstances.

b. The marking system on the road section must only be in respect of observance of the law or the **Highway Code**.

c. They must not have any timing on the road sections other than that necessary to determine the duration of the **Competition**.

d. If any **Tests** of driving ability are included they must not exceed 100m in length.

e. If timed **Tests** are included the speed of the **Vehicles** must not be the sole determining factor and at least an equal number of untimed **Tests** must also be included.

f. All tests whether timed or untimed must include an element of maneuvering skill or judgement on the part of the **Driver** in addition to testing the capabilities of the **Vehicle**.

g. The title of the **Event** must clearly indicate its connection with road safety.

3. Treasure Hunts

3.1. Must comply with the following:

a. No merit must attach to being the first to arrive at the **Finish** or at any other point.

b. **Competitor**s must not be required to arrive at any point other than the **Finish** at or by a specific time.

c. Where an overall time limit is set for the **Event** it must be possible to win without exceeding an average speed of 10mph from **Start** to **Finish**.

d. **Competitor**s must not be required to travel more than 100 miles on a highway or to perform any task or solve any problem that is likely to inconvenience or offend anyone not taking part in the **Event**.

4. Veteran Car Rallies (or Runs)

4.1. These must comply with the following:

a. If they are run in accordance with b. and d. below it will be exempt from the **PR** requirements of App.19 and **Public Relations** work need only be undertaken by prominent advertising in the area of the route.

b. They must allow **Competitor**s to set their own average speeds subject to a maximum average of 24mph between **Start** and **Finish** (or **Rest Halt**).

c. They must have no intermediate timing points between the **Start** and **Finish** (or **Rest Halt**) and must have only passage controls along their route.

d. **Competitor**s' route instructions should be given in the form of descriptive notes only.

5. Economy Runs

5.1. If held on or using private land **Economy Run**s must obtain **ASN** prior written permission before any public announcement is made.

CHAPTER 13 RALLY

Appendix 7A - Road Scheduled Time Events

Penalties

1. Summary of Penalties to be Applied on Scheduled Timed Events

1.1. Performance will be assessed in one of the methods listed, either by time **Penalty** or by the 'fails' system. The **Official** Documents must specify which system is to be used.

1.2. *These penalties may be increased by the **Official** Documents; they may not be reduced.

1.3. **The penalty may be increased if stated in the **Official** Documents.

		Time	Fails
(a)	*Not reporting or reporting **OTL** at a **Main Time Control***	*Retired*	
*(b)	Not reporting or reporting **OTL** at any other **Time Control**	30 minutes	1 Fail
*(c)	Not complying with the **Route Card** including visiting a **Control** more than once	15 minutes	1 Fail
*(d)	Not reporting at **Passage Control** or providing proof of visiting a **Route Check**	5 minutes	1 Fail
*(e)	Arrival before scheduled time at the end of a **Standard Section**	2 minutes per minute	
*(f)	Arrival after due time at the end of a **Standard Section**	1 minute per minute	
*(g)	Arrival before due time at the end of a **Neutral Section**	30 minutes	1 Fail
**(h)	Arrival before due time at an **Intermediate Control** or **Finish Control** of a **Regularity Section**	Actual time early	
*(j)	Arrival after due time at an intermediate control or finish control of a **Regularity Section**. Exceptionally at a single intermediate or finish control of a **Regularity Section** held between 07.00 and 22.00hrs this penalty may be reduced.	Actual time late	
*(k)	Breach of any statutory requirement concerning the use of a motor vehicle	30 minutes	1 Fail
(l)	Contravention of App.5 Art.5.19 *First Offence	30 minutes	1 Fail
	Second Offence	*Disqualified*	
(m)	Excessive speed or driving likely to bring motor sport into disrepute	*Disqualified*	
(n)	Excessive **Noise**	*Disqualified*	
(o)	Receiving assistance contrary to App.3 Art.12.1.d	*Disqualified*	
(p)	Breach of App.3 Art.12.1 (intercoms); App.15 Art.6.6 (Registration Plates)	*Disqualified*	
(q)	Breach of App.4 Arts.2.5–2.8 **inclusive;** App.5 Arts.6.2 and 6.3; App.9 Arts.4	*Disqualified*	

1.4. The items in italics may not be varied by the **Rally Organiser**s.

2. Penalties left to the discretion of the Clerk of the Course which may go as far as Disqualification.

a. Failure to follow the instructions of an **Official**.

b. Further breaches of (k).

c. Breaches of **Regulation**s referred to in Ch.2.

CHAPTER 13 RALLY

Appendix 7B - Road Scheduled Time Events

Penalties

1. Summary of Penalties to be Applied on Scheduled Timed Historic Road Rally Events

1.1. Performance will be assessed in one of the methods listed, either by time **Penalty** or by the 'fails' system. The **Official** Documents must specify which system is to be used.

1.2. *These penalties may be increased by the **Official** Documents; they may not be reduced. They may be varied between period categories (App.15 Art.9.2).

1.3. **The penalty may be increased if stated in the **Official** Documents.

1.4. The items in *italics* may not be varied by the **Rally Organisers**.

		Time	Fails
**(a)	Not reporting or reporting **OTL** at a Main **Time Control**	15 minutes	
*(b)	*Not reporting or reporting **OTL** at any other **Time Control***	1 minute	1 Fail
*(c)	*Not complying with the **Route Card** including visiting a **Control** more than once*	1 minute	1 Fail
*(d)	*Not reporting at **Passage Control** or providing proof of visiting a **Route Check***	1 minute	1 Fail
*(e)	*Arrival before scheduled time at the end of a **Standard Section***	1 minute per minute	
*(f)	Arrival after due time at the end of a **Standard Section**. If a standard section is held totally on private land the final control can be timed to the second	15 seconds per minute	
*(g)	Arrival before due time at the end of a **Neutral Section**	30 minutes	1 Fail
**(h)	Arrival before due time at an **Intermediate Control** or **Finish Control** of a **Regularity Section**	Actual time early	
*(j)	Arrival after due time at an intermediate control or finish control of a **Regularity Section**. This may be capped at 1 minute. Exceptionally at a single intermediate or finish control of a **Regularity Section** on each leg this penalty may be reduced.	Actual time late	
*(k)	Breach of any statutory requirement concerning the use of a motor vehicle	30 minutes	1 Fail
(l)	Contravention of App.5 Art.5.19 *First Offence	30 minutes	1 Fail
	Second Offence	*Disqualified*	
(m)	*Excessive speed or driving likely to bring motor sport into disrepute*	*Disqualified*	
(n)	*Excessive sound*	*Disqualified*	
(o)	*Receiving assistance contrary to App.3 Art.12.1.d*	*Disqualified*	
(p)	*Breach of App.3 Art.12.1 (intercoms); App.15 Art.6.6 (Registration Plates)*	*Disqualified*	
(q)	*Breach of App.4 Arts.2.5–2.8 inclusive; App.5 Arts.6.2 and 6.3; App.9 Arts.4*	*Disqualified*	

2. Penalties left to the discretion of the Clerk of the Course which may go as far as Disqualification.

a. Failure to follow the instructions of an **Official**.

b. Further breaches of (k).

c. Breaches of **Regulations** referred to in **Ch.2.**

d. Any other breach of the **NCR** may be penalised by the **Clerk of the Course** in accordance with **Ch.2 App.2 Art.2.1**

CHAPTER 13 RALLY

Appendix 8 - Target Timed Special Stage Event Penalties

Penalties

1. Summary of Penalties to be Applied on Target Timed Events

1.1. **Competitor**s will start with zero penalties.

1.2. *The **Supplementary Regulation**s must state positively whether the **Penalty** for lateness is to be applied. If not stated any such lateness will be penalty-free.

1.3. Performance will be assessed as follows:

(a) Not reporting or reporting **OTL** at a **Control**; (i) **Multi-Venue Stage Rallies** Or Not completing or missing a **Stage**	Retired 15 Minutes plus stage maximum per stage
(ii) **Single Venue Stage Rallies** (inc **Rally Timed Trials**)	30 minutes per stage or **MTC**/TC
(b) Not complying with a requirement of the **Road Book**	10 minutes
(c) Not performing a **Stage** correctly	**Stage** maximum
(d) Not attempting or being ready to attempt a stage when instructed to do so	1st **Offence** - 10 minutes 2nd **Offence** - **Disqualification**
(e) Making a false start at a **Special Stage**	1st **Offence** – 10 seconds (plus actual false start time) 2nd **Offence** – 1 minute 3rd **Offence** – 3 minutes Further **Offence**s – at the **Clerk of the Course**' discretion
(f)(i) Every second taken to complete a **Special Stage** where timing is to the preceding whole second	1 second
(f) (ii) Every second and 10th of a second taken to complete a **Special Stage** where timing is to the preceding whole 10th of a second	1 second and 10th of a second
(g) For each minute under target time on a road **Section** or in a service area	1 minute
*(h) Only if specifically mentioned in the **Official Documents**, for each minute over target time on a road **Section** or for each minute over **Target Time** in a service area	10 seconds
(j) For each minute before or after due time at **Main Time Control** (out)	10 seconds
(k) Breach of any statutory requirement concerning the use of a motor vehicle	10 minutes
(l) Excessive speed or driving likely to bring motor sport into disrepute	10 minutes
(m) Excessive **Noise**	10 minutes
(n) Receiving assistance contrary to App.18 Arts.1.4–1.14	**Disqualification** & reported to the **ASN**
(o) Breach of App.18 Art.1.3, Art.1.7 and Art.1.8.	10 minutes
(p) Breach of **Regulations**: App.9 Arts.4, App.5 Art.11.3, App.10 Art.7.1–7.2, Arts.7.5–7.9, Arts.7.21–7.32, App.13 Art.14.4	**Disqualification**

(q) Unauthorised use or possession of **Pace Notes** (App.10 Art.7.42) or unauthorised presence on a **Stage** (App.9 Art.1.7)	**Disqualification** & reported to the **ASN**
(r) Failure to comply with App.10 Art.7.22–7.32	**Disqualification** & reported to the **ASN**
(s) Breach of **Regulation**s: App.2 Art. 4.17 or App.10 Art.7.30	**Disqualification**
(t) Breach of **Regulation**: App.18 Art.1.9	**Disqualification** & reported to the **ASN**
(u) Breach of **Regulation**: App.16 Art.7.11	5 minutes

2. Penalties left to the discretion of the Clerk of the Course which may go as far as disqualification (Ch.5 Part A App.5 Art.2).

(aa) Failure to follow the instructions of an official.

(bb) Further breaches of (b), (c), (d), (e), (k), (l), (m) or (n).

(cc) Repeated misbehaviour of service crew.

(dd) Reporting late for Scrutineering.

(ee) Misuse of SOS and/or OK boards.

(ff) Unauthorised testing or practicing (App.12 Art.3.27).

(gg) Causing an obstruction (App.2 Art.4.39)

(hh) Breaches of **Regulation**s detailed in Ch.2.

(ii) Failure to comply with control check-in procedures.

CHAPTER 13 RALLY

Appendix 9 - Competitors Regulations including Licensing

1. General

1.1. This Appendix must be read in conjunction with all Applicable Appendices and **NCR** Chapters 1 and 2 and 6 to 9 and 24.

1.2. Competing **Vehicles** must comply with the appropriate **Technical Regulation**s at Ch.7 and Apps.15 – 17 of this Chapter.

1.3. **Commercial Vehicles** are not permitted in rallies except in accordance with Ch.7 and where the time schedule is set to a lower average speed of 25mph compliant with MV(C&T)R.

1.4. **Competitor**s and **Vehicles** must report for the **Start** and for scrutineering at the times stated in the **Official Documents** or risk being disqualified or forfeiting their starting position.

1.5. At **Event Sign-On**, **Entrants**, **Driver**s and **Co-Driver** or **Navigators** must produce for approval their **Competition Licence** and / or **Club Membership Car**d and the name and address of their insurers covering any part of the **Event** on the **Public Highway** and an **Entrants Licence**.

1.6. **Competitor**s on **Historic Road Rallies** must also present the DVLA registration document of their **Vehicle** as proof of its period authenticity. If the registration document is not sufficient verification then written authorisation from the **ASN** (or an **ASN** / **FIA** identity form) must be presented.

1.7. Any **Competition Licence** holder who **Permits** the unauthorised presence at any time of any **Vehicle** on a known or former **Special Stage** or on private property including land owned or managed by any of the Defence Infrastructure Organisation or Natural Resources Wales or Forestry and Land Scotland or the Forestry England or DAERA Forest Service NI will be Disqualified from any related **Event** and referred to the **ASN National Court**.

2. Necessary Licences

2.1. A **Competitor** must hold a current valid RTA licence appropriate to their vehicle on an **Event**.

2.2. Both **Driver** and **Co-Driver** or **Navigator** must hold and produce a valid **Competition Licence** for those rallies specified in the **ASN Chart of Minimum Acceptable Licences** as requiring a **Competition Licence**.

2.3. Exceptionally and for **Clubmans Historic Road Rallies** only **Competitor**s who are not eligible to apply for an **ASN Competition Licence** may obtain an **Historic Regularity Competitor**s **Permit** which use and validity is limited solely to that **Rally**.

2.4. **Competitor**s must hold and produce a valid **Club Membership Car**d for all **Event**s of Interclub status or less.

2.5. If the **Entrant** is neither the **Driver**, **Co-Driver** or **Navigator** then they must hold and produce a valid **Entrant**'s **Licence** (See **ASN Chart of Minimum Acceptable Entrant**'s **Licence**s).

2.6. To upgrade a **Competition Licence** refer to Ch.6 or the notes accompanying the **Licence** application form.

2.7. All new **Drivers Competition Licences** holders are limited to **Vehicles** in Classes 4 to 16 and H1(a) to H14 for a minimum of 4 **Events**. On completion of 4 **Events**, evidence must be provided to the **BARS** instructor who will then advise the **ASN** if the **Competitor** is able to avail of Classes 1 to 3, H15 and H16. Evidence is considered to be a signature from the **Clerk of the Course** or results from the 4 completed **Events**.

a. The **BARS** Instructor will advise the **Competitor** if it is required to complete further **Events**.

b. If the **Competitor** disputes the requirement to complete further **Events**, they must contact the **ASN Rally** department by writing to **rally@motorsportuk.org**.

c. **Competitors** who have existing experience within a different discipline, or experience within the **Rally** discipline that is deemed acceptable by the **BARS** Instructor, may be granted permission to compete

in all classes, at the time of undertaking their **BARS** test.

3. Minimum Ages

3.1. **Driver**s must be at least 17 years old and hold a full RTA **Licence** for all **Rallies**.

3.2. **Navigators** (non-**Driver**s) on **Rallies** without **Special Stage**s must be at least 12 years old and must be 16 years old on rallies with **Special Stage**s.

3.3. Subject to **Art.3.4** below no person under 16 years of age may be carried in a competing **Vehicle** during a **Rally** with **Special Stage**s.

3.4. Exceptionally for **Single Venue Stage Rallies** taking place on a **Venue** that is currently or was previously a licensed **Race** or **Speed** or **Kart Circuit** or any airfield type **Venue** (disused or not) the minimum age for the **Navigator** is 14 years of age.

4. The Crew

4.1. Those people occupying any **Vehicle** will be collectively referred to as its crew.

4.2. Each **Vehicle** must carry at least one **Passenger** (as **Navigator** or **Co-Driver**) as well as the **Driver**.

4.3. The persons carried at the start must not be varied during the Event, unless authorised by the Official Documents.

4.4. Only the nominated **Driver** and **Co-Driver** listed on the **Official** entry form can drive during a **Competition** unless the **Official Documents** specify otherwise.

4.5. No-one is allowed to travel in a competing **Vehicle** other than in an appropriate seat correctly fitted.

4.6. No competing **Vehicle** can carry more than one physically disabled person and whose participation must be authorised pursuant to **Ch.6**.

5. Competition Numbers

5.1. Any means of identification fixed to a competing **Vehicle** for the **Competition** must be removed when the **Competitor** retires or is Disqualified from or completes the **Event**.

5.2. On **Road Rallies** the rally plates (if required by the **Organiser**s) must be displayed at the front or rear of the **Vehicle** and on or just below the rear nearside window.

5.3. For **Endurance Road** and **Targa Road Rallies** rally plates must be displayed at the front or rear of the **Vehicle** and 2 x numbers for each rear side window which shall be 15cm high with a stroke width of at least 15mm coloured orange or yellow and may be reflective. These numbers shall be in place at the top of the rear side windows (or equivalent space on two-seater **Vehicles**).

5.4. On **Special Stage Rallies** the **Organiser**s will specify in the **Official Documents** how **Competitor**s must display their allocated **Competition Number** as follows:

a. In accordance with **Ch.7** together with,

b. **Competition Number**s for each rear side window (or equivalent area on smaller **Vehicles**) which shall be 200mm high with a stroke width of at least 25mm and a minimum separation of not less than 25mm and coloured yellow or orange and which may be reflective.

c. Further in the bottom of the rear screen (or equivalent space on two-seater cars) the **Competition Number** shall be displayed black numbers on a 180mm x 180mm white background. This number must be visible from the rear of the **Vehicle** at eye level but must not impede the rear view via the rear view mirror. Where a **National Event** follows an **International Status Event** they may use the **International** style numbering.

5.5. The numbers must be in position before the **Vehicle** is presented for scrutineering and will be subject to approval as to the position and legibility and size.

5.6. The **Timekeepers** may decline to record the time of any **Vehicle** whose **Competition** numbers are not

readily apparent.

5.7. On **Multi**-**Venue Stage Rallies** rally plates must be displayed at the front and rear of the **Vehicle**.

5.8. On **Single Venue Stage Rallies** front and rear plates are at the **Organiser**s discretion.

CHAPTER 13 RALLY

Appendix 10 - Competitors Specific Regulations for Special Stage Rallies

1. General

1.1. This Appendix must be read in conjunction with all applicable Appendices of this Chapter.

1.2. This Appendix covers the following defined categories of **Event**.

2. Special Stage Rally

2.1. A **Rally** containing **Special Stage**s joined by linking sections that may use the **Public Highway**.

3. Special Stage

3.1. A section of a **Rally** on roads or land for which the **Event** has exclusive access or on public roads closed by Government legislation specifically permitting closure for motor sporting purposes where the marking for maintaining a time schedule forms a part of the **Competition**.

4. Single Venue Stage Rally

4.1. A **Special Stage Rally** which uses parts of stages more than four times during any day of the **Event**.

5. Historic Special Stage Rally

5.1. As Art.2 and 4 above but participation is limited to **Vehicles** complying with the appropriate **Technical Regulation**s for **Historic Special Stage Rally Vehicles**.

6. Rally Time Trial

6.1. A **Single Venue Stage Rally** run over a **Stage** not greater than 4 miles in length

7. Applicable to All Special Stage Rallies

7.1. **Competitors** and associated service vehicles and personnel may only fit or use radio transceiving equipment and frequencies that are licensed according to **Regulation**s issued by Ofcom.

7.2. **Competitors** and associated service vehicles and personnel must not use or carry any radio transmitting device that operates on or interferes with the **ASN** licensed Frequencies.

7.3. Contravention of Arts. 7.1 and 7.2 above will be penalised by **Disqualification**

7.4. **Competitors** must present at scrutineering a valid **ASN Competition Car Log Book** / **Vehicle Passport** obtainable from **ASN** Scrutineers by appointment.

7.5. In conjunction with scrutiny of the **Vehicle Driver**s' and **Co- Driver**s' crash helmets, **FHR Devices** and overalls must be produced for approval.

7.6. All crew members must wear a crash helmet bearing an **ASN** approval sticker and a safety belt throughout any **Special Stage**.

7.7. The crew must wear flame-resistant overalls homologated to **FIA** 8856-2000 **FIA** 8856-2018 or **FIA** 1986 **Standard** and balaclavas to **FIA** 8856-2000 or **FIA** 8856-2018 **Standard**. **Competitors** are also strongly advised to wear flame-resistant shoes, gloves, socks and underwear. Plastic shoes (such as trainers) should be avoided. Attention is drawn to Ch.9 in relation to **Competitor PPE**.

7.8. The crew must wear **FIA** approved **FHR Devices** fitted in accordance with Ch.9.

7.9. **Competitors** are strongly recommended to carry a **First Aid Kit**.

7.10. **Competitors** must carry an A4-size white board with a red SOS on one side and black OK on the other (letters to be a minimum of 12cm high with a minimum stroke width of 1.5cm) with means to secure the board on display for oncoming **Competitors**.

7.11. In the case of an incident where urgent medical attention is required the red SOS sign must be displayed as quickly as possible to alert following **Vehicles** and aid any aircraft attempting to assist. Where present the crew must operate the SOS function on the **Tracking Console**.

7.12. Any crew that sees a red SOS sign displayed on a **Vehicle** or sees a major accident where both crew members are inside the **Vehicle** but not displaying the SOS sign must immediately and without exception stop to give assistance. Where present the crew must operate the SOS function on the **Tracking Console** in their own **Vehicle** and that of the crashed **Vehicle** where accessible.

7.13. All following **Vehicles** must also stop and the second **Vehicle** arriving at the scene must inform the next radio point.

7.14. Subsequent **Vehicles** must leave a clear route for emergency vehicles.

7.15. The **Clerk of the Course** may award a discretionary time to any **Competitor** delayed in such circumstances.

7.16. Any crew which is able to but fails to comply with Arts.7.11–7.15 above may be **Disqualified** following a **Judicial Hearing** and reported to the **ASN** in accordance with but pursuant to the **Judicial** procedures provided by Ch.2.

7.17. In the case of an incident where medical intervention is not required the OK sign must be clearly shown to following **Vehicles** and to any aircraft attempting to assist. If the crew leave the vehicle the OK sign must be left clearly visible to other **Competitor**s. Where present the crew must operate the OK function button on the **Tracking Console**.

7.18. The Emergency Red Warning Triangle must be placed at least 100m down the stage appropriate to the approaching speed of following **Competitor**s to provide a visible advanced warning.

7.19. Any crew failing to comply with Art.7.17 above may be **Disqualified** following a **Judicial Hearing** and reported to the **ASN** in accordance with but pursuant to the **Judicial** procedures provided by Ch.2.

7.20. **Competitor**s who misuse the SOS or OK signs will be penalised in accordance with but pursuant to the **Judicial** procedures provided by Ch.2 and may be reported to the **ASN** for further action.

7.21. Where a **Tracking System** is being used, a **Competitor** encountering a hazard other than described in Art. 7.12 above must operate the **Hazard** function on the **Tracking Console** and await further instructions from **Official**s.

7.22. **Competitor**s who misuse the **Hazard** function may be **Disqualified** following a **Judicial Hearing** pursuant to Ch.2. and reported to the **ASN** for further action.

7.23. A ‘hazard’ is defined as any situation or incident on a **Special Stage** which is considered to be creating a safety issue that affects the safe passage of **Competitor**s through that **Stage**.

7.24. **Competitor**s must conform to the **Medical Requirements** specified in Ch.6.

7.25. All **Competitor**s must comply with any instructions in the **Road Book** concerning stopping at road junctions and failure to comply will be penalised as provided at App.8.b. or App.14.c.

7.26. **Crew** members must not smoke during any stage.

7.27. During a **Special Stage** the prescribed route must be followed and all direction signs displayed are mandatory.

7.28. **Competitor**s overshooting the **Stop** line at the end of any stage are forbidden to reverse back to the **Control**.

7.29. **Competitor**s are forbidden to traverse any part of a **Special Stage** in the opposite direction to **Rally** traffic.

7.30. **Competitor**s must not voluntarily leave the prescribed route of a **Special Stage** without the express permission of the **Stage Commander**.

7.31. On passing a **Red Signal** displayed by a **Marshal** wearing a **Marshals**’ tabard the crew MUST immediately and significantly reduce speed as well as being prepared to stop at any time.

7.32. At no time must a **Competitor** overtake any safety vehicle encountered on the **Special Stage** route. The

crew must then follow the instructions of any **Marshals** and / or stage safety personnel and maintain a reduced non-competitive speed until leaving the **Special Stage**. **Failure** to comply with this rule may result in **Disqualification** following a **Judicial Hearing** and reported to the **ASN** in accordance with but pursuant to the **Judicial** procedures provided by Ch.2.

7.33. **Competitor**s must not continue until advised to do so by an **Official**.

7.34. **Competitor**s may only attempt a **Special Stage** once.

7.35. Re-runs are not **Permitted**.

7.36. When manual timing is to be used for a **Special Stage** and following the **Stage Start Marshal**'s instruction that the **Competitor** is next to start the starting procedure is as follows:

a. The **Marshal** should give a loud verbal indication of 30 seconds 15 seconds 10 seconds and 5 seconds to go and then count down orally each second 5-4-3-2-1-**GO**.

b. Upon the signal **GO** a visual starting signal must be given which will normally be the raising of a flag from the bonnet (not the windscreen). Any other visual Signal to be used must be described in the **Event Official Documents**.

7.37. When automatic timing is used the **Official Documents** must detail the precise method which will be in operation with a clear description of the countdown method and the Signal to **GO**.

7.38. Making a false start will be penalised as per App.8 Art.e or App.14 Art.f.

7.39. If an automatic method of recording a false start is to be used the false start detector should be placed between 30cm and 40cm in front of the actual **Start** Line and the method of use and implementation must be described in the **Event Official Documents**. The timing system must be capable of recording the time that the car passes through the false start detector. These times must be made available to the **Organiser**s with any **Competitor**s recording a false start reported to the **Clerk of the Course** will be penalised as per App.8 Art.e or App.14 Art.f.

7.40. **Stage**s where **Competitor**s are required to start at intervals of less than one minute may dispense with the 30 seconds to go advance warning and this revised procedure must be advised in the **Official Documents**.

7.41. Any crew refusing to start a **Special Stage** at the time and in the position allocated will be penalised as per App.8 Art.e or App.8 Art.d which may be extended as far as **Disqualification** on the discretion of the **Clerk of the Course** in accordance with but pursuant to the **Judicial** procedures provided by Ch.2. whether the **Special Stage** is run or not.

7.42. Unless specifically allowed by the **Official Documents** the use of or possession of **Pace Notes** or any other means of giving a **Competitor** advice relating to the traversing of a **Special Stage** on a **Multi-Venue Stage Rally** that has not been provided by the **Organiser**s is forbidden. Minor annotations to supplied Subjective **Route Notes** are permitted but must not be rewritten into any other format. Contravention will be penalised in accordance with App.14 Art.r or App.8 Art.r .

7.43. On any **Single Venue Stage Rally** taking place on a **Venue** that is currently or was previously a licensed **Race Speed** or **Kart Circuit** or any airfield type **Venue** (disused or not) the use provision or possession of such information is prohibited and cannot be varied by the **Official Documents** except that:

a. This does not however preclude a crew from recording or annotating information during an **Event** on the route instructions issued by the **Organiser**s for use later on in the same **Event** and

b. Neither does it preclude the use of Ordnance Survey maps of 1:25000 or 1:50000 scale along with others that are specified in the **Official Documents** as being necessary to complete the route but the only supplementary information that may be shown on the maps is information given by the **Organiser**s (including route details).

7.44. Contravention of Art.7.42 above will be penalised in accordance with App.14 Art.r or App.8 Art.r.

CHAPTER 13 RALLY

Appendix 11 Part A - Specific Regulations for Special Stage Rallies

1. General

1.1. This Appendix must be read in conjunction with all applicable Appendices of this Chapter in particular Appendix 1 and 2 and the **ASN Stage Rally Safety Requirements** as published on the **ASN** website **www.motorsportuk.org** of which all provisions are mandatory in the Organisation of **Special Stage Rallies.**

1.2. **This Appendix 11** comprising **11A** and **11B** for **Single Venue Stage Rallies and Rally Time Trials covers the following defined categories of Event.**

2. Special Stage Rally

2.1. A **Rally** containing **Special Stages** joined by linking sections that may use the **Public Highway.**

3. Special Stage

3.1. A section of a **Rally** on roads or land for which the **Event** has exclusive access or on public roads closed by Government legislation specifically permitting closure for motor sporting purposes where the marking for maintaining a time schedule forms a part of the **Competition.**

4. Single Venue Stage Rally

4.1. A **Special Stage Rally** which uses parts of stages more than four times during any day of the **Event.**

5. Historic Special Stage Rally

5.1. As above **Arts.2** and **4** but participation is limited to **Vehicles** complying with the appropriate **Technical Regulations** for **Historic Special Stage Rally Vehicles**.

5.2. **Historic Vehicles** in each of Categories 1, 2, 3, 4 and 5 must compete in separate **Classes** with separate **Class** results and awards to give a clear distinction between the periods of **Vehicles.** Refer to **App.17** of this Chapter for the recommended classes.

6. Rally Time Trial

6.1. A **Single Venue Stage Rally** run over a **Stage** not greater than 4 miles in length.

7. Applicable Appendices

7.1. **App.12** applies in respect of **Special Stage Routes** and **Sections.**

7.2. **App.13** applies in respect of **Special Stage Controls** and **Timing** and **Penalties.**

7.3. **App.14** applies in respect of **Scheduled Time Special Stage Event Penalties** and **Ch.2 (Judicial).**

7.4. **App.8** applies in respect of **Target Timed Special Stage Event Penalties** and **Ch.2 (Judicial).**

7.5. **App.16** applies in respect of **Special Stage Rally Cars.**

7.6. **App.17** applies in respect of **Technical Regulations** for **Historic Special Stage Rally Cars.**

7.7. **App.18** applies in respect of **Servicing and Organised Assistance.**

7.8. **App.20** applies in respect of medical and safety cover.

7.9. **App.23** applies in respect of Drawings.

7.10. **Ch.2** applies generally in respect of **Judicial** and **Disciplinary** matters including **Protests** and **Appeals.**

7.11. **Chapters 3 to 5 inclusive** and **7 to 9 inclusive** apply to the extent applicable to this **Discipline.**

7.12. **Fees** and **Fines** are provided in **Ch.1 App.2**.

7.13. Definitions are also provided in **Ch.1 App.1**.

CHAPTER 13 RALLY

Appendix 11 Part B - Specific Regulations for Single Venue Stage Rallies and Rally Time Trials

1. General

1.1. This Appendix must be read in conjunction with all applicable Appendices of this Chapter in particular Appendix 1 and 2 and the **ASN Stage Rally Safety Requirements** as published on the **ASN** website **www.motorsportuk.org** of which all provisions are mandatory in the **Organisation of Special Stage Rallies.**

1.2. This App.11B makes specific provisions for **Single Venue Stage Rallies and Rally Time Trials.**

2. Single Venue Stage Rallies

2.1. The **Official Documents** must state whether the **Public Highway** is being used or not.

2.2. No **Stage** route may be used more than twice.

2.3. For a **Stage** route to be recognised as different it must vary by at least 20% of the **Stage** route if run in the same direction or be reversed.

2.4. No part of a **Stage** may be used in any one direction more than 12 times during the **Event**.

2.5. A Co-Driver who has signed on must be carried in each competing Vehicle, except Cross Car (XC) as appropriate.

2.6. No practising is permitted.

2.7. **Pace Notes** or any other means of giving **Competitor**s advice relating to traversing any **Stage** are prohibited except as provided by this App.11B on a **Single Venue Stage Rally** taking place on a **Venue** that is currently or was previously a **Race** or **Speed** or **Kart Circuit Licensed** by the **ASN** or on any airfield type **Venue** whether in current use as an airfield or not.

2.8. By exception to Art.2.7 above a crew is permitted during an **Event** to record or to annotate information on route instructions issued by the **Organiser**s but solely for use later in the same **Event**.

2.9. By exception to Art.2.7 above but subject to Art.2.10 below **Competitor**s are permitted to use **Ordnance Survey** maps of either 1:25000 or 1:50000 scale along with others that are specified in the **Official Documents** as being necessary to complete the **Course**.

2.10. The only supplementary information that may be shown on the maps referred to at Art.2.9 above is information given to **Competitor**s in an **Official Document** by the **Organiser**s including route details.

2.11. Any breach of Art.2.7 - Art.2.10 above shall result in **Disqualification** from the **Event** pursuant to the **Judicial** Procedures of Ch.2 and referral to the **ASN** for consideration of further disciplinary action.

2.12. The **Organiser**s must obtain written permission from the **ASN** in respect of any activity other than the **Competition** proposed to be held at the **Event Venue** to ensure that adequate insurance cover is provided.

2.13. **PR** work must be undertaken in accordance with App.19 of this Chapter irrespective of whether the **Public Highway** is to be used as part of any **Event**.

2.14. Fire Extinguishers must be available in any area defined as a Service Area and any area in which competing **Vehicles** are assembled awaiting their attempt at a **Stage** and at stop lines.

2.15. At **Venue**s where spectators are encouraged to attend there must be a resident **Spectator Safety Car** equipped with a PA system and a radio on the frequency to be used on the **Event**.

3. Rally Time Trials

3.1. A **Rally Time** Trial is a **Single Venue Special Stage Rally** and must be run in accordance with the **NCR** as to **Competitor** eligibility and safety eligibility and **Stage Rally Safety Requirements**.

3.2. All **Vehicles** must comply with the **Technical Regulation**s of Appendices 15, 16 and 17 as applicable.

3.3. The following specific provisions apply:

a. No **Passengers** can be carried during either Practice or competitive runs UNLESS authorised by the **ASN** when a higher **Permit** Fee will be payable due to insurance considerations.

b. The **Course** must not exceed a distance of 4 miles.

c. The **Clerk of the Course** may authorise re-runs.

d. Results need not be based on cumulative times but may be based on selective aggregate times (i.e best 2 of 3 runs) or be purely on the best time achieved.

e. The starting procedure must comply with that of a **Stage** but an arrival control is not required.

3.4. **Rally Time Trials** are not valid for upgrading a **Stage Rally Competition Licence**.

4. Cross Car (XC)

4.1. Cross Car (XC) are permitted within approved Rally Time Trials and Single Venue Stage Rally Events only. All Events must gain approval from the ASN prior to advertising the inclusion of these Vehicles.

4.2. All Vehicles must comply with the Technical Regulations in **Appendix 16 of this Chapter** as applicable.

4.3. All Crews must comply with the Regulations in **Apps.10** and **11A**

CHAPTER 13 RALLY

Appendix 11 Part C - Specific Regulations for Targa Road Rallies

1. General

1.1. **Targa Road Rallies** must comply with the following;

a. To be classified as a finisher a **Competitor** must report to all **Main Time Control**s and, unless otherwise stated in the **Event Document**s, attempt at least 75% of the tests listed in the **Route Card** or **Time Card**.

b. Not include any **Standard Sections**.

c. **Regularity Section**s may be included.

d. **Classes** to be set by **Organisers**.

e. No regular assistance organised in advance may be used by **Competitors** in **Rallies** defined in App.3 Arts.2–10 inclusive, except when permitted in the **Event Official Documents** for **Targa Road Rallies** taking place at a **Single Venue**.

2. Vehicles - General Regulations

2.1. **Competitors** are required to carry a **First Aid Kit**, high visibility vests or jackets, OK/SOS board, **Spill Kit**, warning triangle and for **Events** run during the hours of darkness a torch. It is recommended that all **Competitors** carry a fire extinguisher that is positioned and secured appropriately.

2.2. The use of in car cameras, is forbidden on any public road sections. **Organisers** may not sanction, encourage or facilitate the filming of **Events** taking part on the **Public Highway**. The use of in car cameras (fitting must be specifically approved by a **Scrutineer**) is allowed where **Official Documents** expressly permit this. A copy of any recording must be provided to the **ASN** if requested.

2.3. The **Vehicle** must be currently registered and taxed as a **Private Car** and comply with all statutory regulations as to the **Construction** and **Use Regulations** (especially regarding brakes, lighting, tyres, warning devices, rear view mirrors, silencers, speedometers, wings and windscreens). In this section the term MODEL refers to all variants of the same family of cars. In addition to complying with Ch.7 all **Vehicle** competing in **Road Rallies** must comply with the appropriate part of the following: **Body**. **Vehicles** of commercial type, such as vans / pickups (Ch.7 App.2 Art.22.5) are not permitted.

2.4. Be currently registered and taxed as a private car, unless specific **Event** regulations relax the requirement for taxation, by virtue of the entire **Event** taking place wholly on private property.

2.5. All major internal trim as fitted to the body type by its original manufacturer when offering it for sale must be retained. Major internal trim includes headlining, inside door panels (which may be replaced with representative material) for all doors and / or rear side panels alongside the rear seat (for a 2 door car), carpets and rear seats. It does not include parcel shelves, boot carpet or boot side trims.

2.6. Front seats may be improved or replaced.

2.7. The trim including the door cards and rear seat may be cut to allow the fitting of a safety cage.

2.8. If equipped with a non-standard fuel tank it must be separated from the **Driver** / **Passenger** compartment by a protective bulkhead of non-flammable material preventing the passage of fluid or flame.

2.9. Full harness seat belts may be fitted.

2.10. Guards may be fitted beneath the **Vehicle** to provide protection from damage.

3. Engines and Transmissions

3.1. **Vehicle** engines must have:

a. A maximum of four cylinders.

b. A maximum of two carburettor chokes (two single or one double).

c. A maximum of one camshaft per bank of cylinders.

3.2. Engines with more than one camshaft per bank of cylinders may be used providing that:

a. any replacement engine comprises a block and cylinder head from the same engine family.

b. they were originally fitted with fuel injection, and;

c. that fuel injection system complete with the inlet manifold and throttle body is retained unmodified except as permitted in **Art.2.3.c**.

3.3. It is permitted to make the following modifications to effect installation;

a. alternative engine mountings, sump pan and exhaust manifolds are permitted;

b. it is permitted to relocate ancillaries such as alternators and steering pumps.

c. it is permitted to change the orientation of the otherwise unmodified inlet manifold provided it is fitted directly to the cylinder head without the addition of an intermediate adapter device.

3.4. For petrol engines under 1500cc and diesel engines under 2000cc actual capacity, forced induction is permitted providing that the complete original induction system is retained unmodified and other than the replacement of the air filter element.

3.5. Fuel injection may be fitted where it was standard equipment by the manufacturer for that engine type and where the original plenum chamber and throttle body is retained for that engine type.

3.6. A standard Wankel unit will be considered as three cylinders – twin Wankel units are prohibited.

3.7. Engines must comply with the silencing levels **Ch.5 App.8, Ch.7 App.8 Art.2** and **App.1 Art.7** of this Chapter and have induction air filter elements fitted that ensure the **Vehicle** complies with noise regulations **Ch.7 App.8 Art.2.**

3.8. The only type of manual transmission permitted is an H shift pattern. The gear lever must remain the only means of changing gear unless an alternative method was originally fitted by the **Vehicle** manufacturer as standard. Automatic transmissions are permitted provided that they are in their original configuration as fitted by the manufacturer to that specific **Vehicle** model.

3.9. The number and location of the driven wheels must remain as original to the model of car.

4. Wheels and Tyres

4.1. Wheels and tyre sizes are free but must fit within the standard unmodified wheel arch. A maximum of six tyres can be used by a crew during an **Event** unless the **Official Documents** state otherwise.

4.2. **Vehicles** must be fitted with tyres that are always legal for use on the **Public Highway**.

4.3. Tyres must comply with **Ch.8 App.4 Art.3.1.**

4.4. **Vehicles** must have all spare wheels securely fastened in position and must not be fitted with spiked or studded tyres or any non-skid attachments, other than chains if permitted by **Official Documents**.

5. Electrical Systems

5.1. **Vehicles** must have a maximum of four forward facing beams, as well as side and indicator lights, unless further restrictions are specified in **Official Document**s. Where more than four beams are fitted as standard, only four may be used and the remainder must be rendered unusable for the duration of the **Event**.

5.2. Light pods are not permitted.

5.3. A headlamp must provide the main beam and dipped beam functions.

5.4. An auxiliary lamp provides a beam other than that provided by the headlamp. With the exception of **Vehicles** built before 31st December 1946 the maximum width of the lamp body of any auxiliary lamp must not exceed 222mm.

5.5. A headlamp may consist of a single reflector with a dual filament bulb, or separate reflectors each with single filament bulbs providing the functions of main beam and dipped beam separately. This will be considered as equivalent to a single dual filament headlamp unit. Lamp units comprising two reflectors where one is fitted with a dual filament bulb will be considered as a combined headlamp and auxiliary lamp. In this instance therefore no additional auxiliary lamps may be fitted.

5.6. Auxiliary lamps unless fitted as standard equipment using gas discharge or LED technology are not permitted and gas discharge or LED headlamp units may not be retro fitted.

5.7. Auxiliary lights must not be used in neutral sections except in poor visibility as permitted by law.

5.8. Where more than four beams are fitted as standard, only four may be used and the remainder must be rendered unusable for the duration of the **Event**.

5.9. **Vehicles** must have all lights fitted and used according to motor **Vehicle** lighting regulations.

5.10. External navigational or **Marshal** lights are not permitted.

5.11. For **Events** taking place wholly between half an hour before sunrise and half an hour after sunset App.15 Art.2.3, Art.5.1, Art.5.2 and Art.5.10 do not apply. App.15 Art.6.1 is relaxed to permit advertising not exceeding 1250 sq cm in total. Also, it is permitted to fit a sunstrip of no more than 90mm deep which may display the manufacturer's make or model, or the name of the **Event**, or a recognised **Motor Club**, or a registered national charity, provided that this does not affect the **Driver**'s view.

6. Miscellaneous

6.1. **Vehicles** may not use racing style numbers, nor have any advertising except for **Event** sponsor decals which must be incorporated within the **Rally** plate.

6.2. They should be equipped with an effective method of stopping fuel supply, operable by the **Driver** when normally seated (the ignition switch would normally cover this requirement) and must use Permitted Fuel as defined in Ch.1 App.1 (**Nomenclature and Definition**s).

6.3. Brakes are free but must comply with Construction and Use **Regulations**. A hydraulic handbrake is permitted where a functioning mechanical system is also present.

6.4. **Vehicles** must display registration plates in compliance with the current **Road Vehicles** (Display of Registration Marks) **Regulations**.

CHAPTER 13 RALLY

Appendix 12 - Special Stage Routes and Sections

1. General

1.1. This Appendix must be read in conjunction with all applicable Appendices of this Chapter.

2. Documentation

2.1. The **Road Book** or **Time Card** must indicate:

a. The description of each **Section** (**Road Section**, **Special Stage**, **Service Area**, **Regroup** etc).

b. The time allowed to traverse the route between each **Time Control** and all the information necessary to enable **Competitors** to comply with their speed obligations.

c. What information the **Organisers** require to be recorded and the places at which these records will be made except for those manned randomly including by **Judges of Fact** and **DSO**s.

d. Which checks will be manned by **Officials** except for checks established by **Judges of Fact** and **DSO**s.

e. Which portions of the **Route** will be timed to less than one minute.

f. Any 'out of bounds' areas to be respected.

g. The position of any junction at which the **Competitor** is required to stop.

h. The areas where **Competitors** are required to observe special restrictions as to driving behaviour (i.e. **Quiet Zones** etc).

i. The order in which controls and checks must be visited.

3. Route

3.1. The onus of following the correct route rests with the **Competitor** who must visit **Controls** and **Checks** in the order set out in the **Road Book** unless otherwise specified.

3.2. No private road must be used by **Competitors** unless specific permission to do so is given in the **Road Book**.

3.3. A **Control** or **Check** shall be considered to extend for 50m around the actual point at which **Officials** are making their records unless clearly visible signs are displayed to define a different area.

3.4. If the direction of approach to, or departure from, a control or check is specified, then any non-compliance with the requirement or passing the control or check when travelling in other than the specified direction or visiting the **Control** or **Check** more than once, may involve a **Penalty**.

3.5. **Officials** will be on duty at all **Controls**.

3.6. If at any control the **Officials** are not present during the whole period when a **Competitor** can report then all performances at that point will be ignored in compiling the results except for any penalty applied relating to excessive **Noise** or speed / driving standards.

3.7. All performances will also be ignored if a **Control** or **Check** is not sited at the location specified in the **Official Documents**.

3.8. The onus of ensuring that all the information required is clearly and legibly recorded at the appropriate time and place rests with the **Competitor**.

3.9. If any entry on a **Time Card** is not legible or appears not authentic it may be considered not to have been made. **Organisers** may refer to **Marshals**' check sheets in case of doubt.

3.10. If there is a discrepancy between the time allowance shown by the **Organisers** on the **Time Cards** and that shown on any other document the **Time Card** will be taken to be correct unless previously amended in an official bulletin.

3.11. It is not permitted to define the route of a **Special Stage** by grid references or any other method requiring **Competitors** to choose their own route.

3.12. Any **Flying Finish** should be located at a point where **Vehicles** can be expected to be travelling slowly because of a preceding bend or hazard.

3.13. The **Flying Finish** line must be at least 200m before the stop line which must be at least 100m before any **Public Highway**. Bad weather slippery conditions and the potential speed of **Vehicles** crossing the **Flying Finish** line may require these distances to be extended.

3.14. The area between the **Flying Finish** and the stop line should so far as practical be free from bends sharp or deceptive corners or hazards such as gates etc. This area is prohibited to spectators.

3.15. **Officials** must be clearly identifiable and wherever possible:

a. Be placed in sight of all signs and arrows and at prohibited areas.

b. Be placed where the public are expected to arrive to watch the stage.

c. Have some pre-arranged system for warning spectators of the approach of **Vehicles**.

d. Be under the control of a **Sector Marshal** if appropriate.

3.16. Where a **Special Stage** forms a continuous circuit **Competitors** must not be required to complete more than two laps.

3.17. **Organisers** must allow at least 100m separation from the start of the stage before **Competitors** join other **Vehicles** already on the **Stage** (Arts.4.2 - 4.5).

3.18. On any **Stage Rally** which is not run under a **Single Venue Stage Rally Permit** the maximum number of competitive passes in any one direction over any **Stage** or any part of a **Stage** is limited to four.

3.19. **Stage** timing throughout an **Event** will be to the preceding second if manual timing is to be used.

3.20. Automatic timing can be to the preceding 1/10th of a second but only if the intention to do so is stated in the **Official Documents**.

3.21. The timing of any **Section** must be recorded in a way that **Competitors** can verify its correctness. This must prohibit the ‘setting back’ of the section finish watch.

3.22. The only timing that can be considered is from the Standing **Start** to the **Flying Finish** line.

3.23. No **Competitor** may gain an advantage by exceeding the specified average speed.

3.24. The time based on this average shall be referred to as the **Stage** Bogey **Time**.

3.25. **Competitors** must not be started from any stage start at intervals of less than one minute unless in accordance with the following procedures:

3.26. Authorisation for **Stage Starts** of between 30 seconds and one minute interval must be obtained in writing from the **ASN** and will only be considered when the following information has been submitted:

a. The individual **Stage** name and number and location.

b. The length of the **Stage**.

c. The type of surface (forest tarmac etc).

d. The average width of the road.

e. Diagram(s) of the **Venue** showing **Stage** routes and safety provisions.

f. The number of times **Competitors** are attempting the stage.

g. If the **Competitors** are attempting the stage more than once the time interval between their first and second run and the possibility of catching previous **Competitors**.

h. Whether **Competitors** attempting their second run will be interposed with those still attempting their first.

i. Whether the **Stage** has a split route and if so then how far this is into the stage. On unsealed surfaces the stage must not consist of more than 2.5 miles of common route.

j. Whether extreme weather (eg heavy rain dust etc) will adversely affect a fair **Competition**.

k. **Competitors** have been seeded by performance without dispensation in accordance with these **Regulation**s.

l. Suitable timing arrangements have been made at the **Finish Line**.

3.27. No practising or testing is **Permitted** on any **Special Stage** before any **Event** unless specifically authorised in writing by the **ASN**.

3.28. Any access to any part of a stage whether from a car park or through entrances must be protected by warning notices as specified in and is subject to the requirements of Ch.3.

3.29. There must be a copy of the **Safety Code** on display at all entrances where the public are likely to enter.

3.30. When an admission charge is made for public attendance or where significant numbers of the public are expected to attend suitable arrangements must be made by the **Organisers** for dealing with the first-aid requirements of spectators.

3.31. Where the nature of the venue is such that it is either impractical to apply such precautions or access by the public cannot reasonably be controlled then only a car park charge may be levied. **ASN** approval is not required when imposing this charge.

3.32. On **Events** where there is a published programme or where information is published which gives details of the location of **Special Stages** a copy of the **Safety Code** for the guidance of spectators must be included.

3.33. Means of access onto the stage must be closed by barriers and signs sufficient to prevent any non-competing vehicle gaining access. Warning notices as detailed in Ch.3 must be displayed.

3.34. It should also be impossible for anyone on foot to get on to any stage through normal access roads or tracks without complying with all of the following:

a. Being aware of it

b. Having been seen by an **Official**

c. Having seen a warning notice

d. Having seen the **Safety Code**.

Types of Section

3.35. The following terminology and restrictions apply to all stage rally sections. No other title or description is valid:

Road Section

3.36. Any section of the route of a **Special Stage Rally** (excluding control and service areas) whether on the **Public Highway** or not which links **Special Stages**.

3.37. When on the **Public Highway** these sections must comply with the average speed requirements of App.2.

3.38. **Competitors** must not use any auxiliary lights in road sections except in conditions of reduced visibility as permitted by law. Any forward-facing lights additional to the headlight system sidelights and indicators are deemed to be auxiliary lights.

Special Stage

3.39. A section of a **Rally** on roads or land for which the **Event** has exclusive access or on public roads closed by Government legislation specifically **Permitting** closure for motor sporting purposes where the marking

for maintaining a time schedule forms a part of the **Competition**.

Special Stages

3.40. Unless approved in writing by the **ASN Special Stages** must not include any checks or controls or other requirements that might require or encourage **Competitors** to stop during the stage. **Application**s shall be made in accordance with **Art.3.26 above.**

3.41. **Special Stages** must be over a distance of not less than half a mile and no stage may exceed 20 miles in length without written permission from the **ASN**.

3.42. If the stage is wholly on a sealed surface no **Competitor** should be able to achieve an average speed of more than 75mph. Subject to **Art.3.44** the average speed may be increased to 80mph.

3.43. If the stage is run partly or wholly on unsealed surfaces no **Competitor** should be able to achieve an average speed of more than 70mph. Subject to **Art.3.44** the average speed may be increased to 75mph.

3.44. **Clerks of the Course** and **Event Safety Officers** must attend a webinar hosted by the **ASN** (and provide evidence of attendance if requested) prior to receiving permission to utilise the increased average speeds specified above.

3.45. **Special Stages** must not use any sections of a **Venue** in opposite directions at the same time unless there is at least a 15m separation between the two routes with a continuous barrier to prevent a car crossing. Crossroads used twice must preserve this separation.

3.46. The barrier must consist of one or more of the following:

a. large truck and/or tractor type tyres, permanently joined in threes, or existing tyre barriers available at circuit based venues,

b. straw or silage bales, wrapped or unwrapped

c. earthbanks or similar immovable objects.

3.47. **Motorway** cones or blocking tapes are not suitable for the purposes of **Art.3.45 and Art.3.46** above.

3.48. **Special Stages** must not use any currently or previously licensed **Race Speed** or **Kart Circuit** nor any airfield (disused or not) unless the **ASN** has specifically approved in writing the stage layouts and safety precautions. **Application**s must be made in accordance with **Art.3.26 above.**

3.49. These **Stages** must not be routed closer than 75m to any parked aircraft unless there is a solid physical barrier at the edge of the course protecting the aircraft and a gap of 45m from the barrier to the aircraft.

3.50. At the start of every **Special Stage** the **Organisers** must provide a **Medium Spill Kit**.

4. Arrows and Signs

4.1. The correct route should be indicated to **Competitors** by arrows and signs and by physical blockage of all but the correct road. These indications shall wherever possible be consistent with **App.23 Drawing 5** and with the following:

a. Arrowing must be reduced to a minimum and placed only at junctions. Really acute bends or hazards where a drastic reduction in speed is required should be marked by a caution or bend sign. Arrows must not be used to define chicanes. A chevron board **App.23 Drawing 4** showing the entry to the chicane must be placed in the full view of **Competitors**. This board must have minimum dimensions of 76cm x 61cm.

b. Arrows should be placed approximately 1.2m from the ground. Wherever possible arrows shall be of Day-Glo red or orange and must be easily visible to **Competitors**. To avoid confusion multiple signs on one post should be avoided.

c. Advance warning signs for junctions must be placed 100m (+ or - 10m where visibility is reduced) before the junction.

d. Two arrows should be visible on any junction fixed to form a 'gate' through which **Competitors** will pass. Arrows may be angled to show the severity of the junction indicated by one of four basic positions vertical horizontal raised or lowered by 45°. An example of the method used must be shown to **Competitors** before the **Event**.

e. A wrong direction must be indicated by a standard No Entry sign (a red disc with a white bar) and all but the correct road must be visibly blocked by appropriate means except as provided for in **Art. 4.1.f below**. Alternatively but only on closed road stages the No Entry Sign may be replaced by a Chevron **Board** and tape as shown in **App.23 Drawing 6**.

f. In the case of wholly tarmac stages that are run on public roads closed for the purpose under Government legislation the preceding regulations apply to all road junctions. It is not mandatory to block off private driveways unless through the layout of the stage the **Organiser**s consider that they would constitute a hazard for **Competitors**. In these circumstances they must be blocked off with tape and at least a No Entry board displayed and notified as in **Art.4.1.g below.**

g. Along with the arrows and signs displayed on the **Special Stage** each **Competitor** must be issued with a Tulip diagram of each stage showing location or hazard numbers or letters and indicating the intermediate mileages between junctions and danger spots or hazards and the direction to be taken.

h. For stages on airfield-type venues it is permissible to substitute a detailed sketch diagram. This diagram must be approved by the **ASN** before the **Event**. This approval will constitute automatic permission to dispense with Tulip diagrams.

i. The warning signs for each location or hazard detailed in the sketch map or Tulip diagram must display the corresponding location or hazard number or letter.

j. **Hazards** should be indicated by a single exclamation sign between 50m/100m before the hazard.

4.2. If a section of road is used twice on stages where the route divides or where two roads merge the junction itself should be clearly marked by a white board at least 76cm x 61cm illustrating the junction and the figures on this board must be at least 15cm high.

4.3. The junction must be preceded by a similar diagrammatic sign in advance of **Motorway** type **Countdown Boards** with diagonal bands positioned approximately 100m and 200m before the junction.

4.4. **Judges of Fact** should be placed at any split junction to note and report for penalty any **Competitor** overshooting and reversing back against the route of **Rally** traffic.

4.5. Where stage routes merge on a lapping stage then the angle between the two roads (prior to the common route) must be no more than 45° to each other and on joining run separately but in parallel for at least 100m before merging and Signs should be shown to **Competitors**. These signs must have a minimum size of 76cm x 61cm (**App.23 Drawing 7**).

4.6. In respect of **Art.4.5** above at the point of merge **Competitors** furthest into stage will have priority and all **Competitor**s must merge in such a way that it does not constitute a danger or hinder other drivers.

4.7. **Radio** Point signs complying with **App.23 Drawing number 8** must be displayed at and before all **Mandatory Radio Points** detailed in the **Road Book** as issued to **Competitors** other than at those locations signed in accordance with **Art.4.5** above.

5. Chicanes

5.1. Applicable to **Multi Venue Stage Rally** events only;

5.2. **Chicanes** must be constructed with a minimum of 4 elements (**Art.5.3 below**) which must maintain a distance of 10m between the outer edge of each element in accordance with **App.23 Drawing number 5**..

5.3. Subject to **Art.5.3 below** below **Chicanes** must be constructed with rectangular or round bales which can be wrapped but must not be tied together with a protective sleeve (**App.23 Drawing 4**).

5.4. Where **Organisers** require **Chicanes** of alternative design and construction methods to those in **Art. 5.1** and **Art.6.1**, due to the limitations of the proposed location or requirement to change the course of the **Vehicle**, these will be considered by means of email application to the **ASN** with the following information;

a. Location

b. Proposed number of elements

c. Proposed construction methods

d. Reason for application

5.5. All **Chicanes** must utilise countdown boards that are blue in colour positioned at 200m and 100m in advance of the **Chicane** as outlined in **App.23 Drawing 4.**

5.6. It is acceptable to position **Chicanes** on roads narrower than 4.26m in width but as with all road widths it is important that **Chicanes** are to be positioned in a way that does not force the competing **Vehicle** off the road in order to enter or exit. Their design must meet the above construction requirements.

5.7. It is recommended that there are no poles, trees, pillars or other hazards at the entry and exit point of the **Chicane**. If such hazards are positioned at the entry or exit of the **Chicane** there is to be additional protection added using bales.

6. Bus Stop Chicanes

6.1. '**Bus Stop**' type **Chicanes** made of a minimum of one element are to follow the proposed construction methods outlined above. Additionally, it is recommended that there are no poles, trees, pillars or other hazards at the entry or exit point of the **Chicane**. If these features are positioned at the entry or exit of the **Chicane** there is to be additional protection added using bales.

7. Recce

7.1. Prior to reconnaissance, **Chicanes** must be marked on the road using semi-permanent paint that is easily visible in wet weather conditions (white to be the preferred colour). **Events** are to use a stencil that mirrors the size of the element where safe to do so. A board 100m prior to the location, and / or a sign identifying the first element and the side of the road of entry should also be in position.

8. Approval Process – Closed Road Multi Venue Events only

8.1. **Safety Delegate** must be provided with **Stage** Set-up **Notes** including all **Chicane** details at least 2 months prior to the **Event** preferably accompanied by a high quality video indicating the exact location to confirm proposed positioning and construction of **Chicanes** (subject to **Art.5.3**).

8.2. Where changes to **Chicanes** are proposed following the presentation of **Chicane** details to the **Safety Delegate** the **Organisers** must provide a further high-quality video to the **Safety Delegate** for their review and approval prior to their arrival on **Events**.

8.3. On approval of the **Safety Delegate** the proposed **Chicanes** can then be approved by the **ASN** Head of **Rallying**.

CHAPTER 13 RALLY

Appendix 13 - Special Stage Controls, Timing and Penalties

1. General

1.1. This Appendix must be read in conjunction with all applicable Appendices in this Chapter.

2. Documentation

2.1. The **Road Book** or **Time Card** must indicate:

a. The description of each **Section** (**Road Section**, **Special Stage**, **Service Area**, **Regroup** etc).

b. The time allowed to traverse the route between each **Time Control** and all the information necessary to enable **Competitor**s to comply with their speed obligations.

c. What information the **Organiser**s require to be recorded and the places at which these records will be made except for those manned randomly including by **Judges of Fact** and **DSO**s.

d. Which checks will be manned by **Official**s except for checks established by **Judges of Fact** and **DSO**s.

e. Which portions of the **Route** will be timed to less than one minute.

f. Any 'out of bounds' areas to be respected.

g. The position of any junction at which the **Competitor** is required to stop.

h. The areas where **Competitor**s are required to observe special restrictions as to driving behaviour (i.e. **Quiet Zone**s etc).

i. The order in which **Control**s and checks must be visited.

3. Controls

3.1. **Control**s will open 15 minutes before the due time of arrival of the first **Vehicle** and close on the direction of the **Clerk of the Course** considering the due time of arrival of the last competing **Vehicle**.

3.2. The **Official Documents** may specify a different opening period.

3.3. The time of arrival at or departure from a **Control** will be the time at which the **Time Card** is presented by the **Competitor** concerned providing all crew members and **Vehicle** are within the **Control** area.

3.4. At all **Control**s the **Time Card** is to be completed manually by a **Marshal**.

3.5. **Control Procedures:**

a. The check-in procedure begins at the moment the car enters the time **Control** area.

b. The actual timing and entry of the time on the **Time Card** may only be carried out if the two crew members and the **Vehicle** are within the **Control** area. Between entering the **Control** area and the **Control** the crew is forbidden to stop for any reason or to drive at an abnormally slow speed.

c. The check-in time shall correspond to the exact moment at which one of the crew members hands the **Time Card** to the appropriate **Marshal** who will enter on the card the actual time at which the card was handed in and nothing else.

d. The target check-in time is the responsibility of the **Crew** alone who may consult the official clock.

e. The **Crew** will incur a penalty for early arrival if the **Vehicle** enters the **Control** area before the minute preceding the target check in minute. The crew will not incur any penalty for lateness if the act of handing the card to the appropriate marshal takes place during the target check-in minute.

f. (Example: A **Vehicle** has left the previous stage finish at 11.04.40 on a section for which the target time is nine minutes. It is therefore due at the next time **Control** at 11.13. It arrives at the yellow

advance **Control** board at 11.08 stopping before the yellow board. The **Vehicle** is permitted to enter the **Control** area at any time after 11.12.00. The **Time Card** may be handed in at any time between 11.13.00 and 11.13.59 and a time of 11.13 will be recorded.)

g. If it is found that a **Crew** has not observed the rules for the check-in procedure the **Marshal** at the **Control** must make this the subject of a written report to be sent to the **Clerk of the Course** for consideration of the application of penalties.

3.6. The time of reporting at **Control**s will be recorded to the preceding whole minute when penalties are imposed per minute (for example 09 minutes 59 seconds will be recorded as 09 minutes).

3.7. Where a **Control** at the end of a section timed to the second (or to the second and part thereof) also forms the start of a section timed to the minute the time of departure will be considered as being the same as arrival but ignoring any seconds or parts thereof.

3.8. **Competitor**s must not leave the **Special Stage Arrival Control** unless ready to start a **Special Stage**.

3.9. Exceptions to **Art.3.5 above** are:

a. In the event of a competing **Vehicle** obstructing other **Competitor**s through being halted or unduly slowed down near a **Control** the **Official**s may instruct the **Driver** to proceed and may then record the time as the time when this instruction is given.

b. In the event of a **Competitor** presenting a **Time Card** to **Official**s at a time when the **Vehicle** is outside the **Control** area the **Official**s have discretion as to whether or not to make a record on the **Time Card**.

c. At the end of a **Rally** or of any day of a **Rally Competitor**s are allowed to check in in advance of their due time. This must be specifically authorised by the **Rally Organiser**s in the **Official Documents** or an official bulletin. **Competitor**s arriving early must have their due time entered on the **Time Card**; those arriving later than their due time must have their actual time of arrival entered.

4. Main Controls

4.1. Are situated at the **Start** and **Finish** of a **Rally** immediately before and after any **Rest Halt** and at any other specified point. At a **Main Control** after a **Rest Halt Competitor**s will (unless the **Official Documents** specify otherwise) restart at one minute intervals:

a. In number order or

b. In the order of their arrival at the **Main Control** preceding the **Rest Halt** or

c. In the order of their arrival at some other preceding **Control** or

d. In the order of General **Classification** at a specified point if interim results are available.

The method used must be specified in an **Official** Instruction. Each **Competitor** must be given a due starting time from any **Main Control** (Out) and any difference between this time and their actual starting time will be counted towards cumulative lateness and a **Time Penalty** applied (unless the **Official Documents** specify otherwise).

5. Regrouping Controls

5.1. The **Road Book** will specify these **Controls** where **Competitors** not **Disqualified** by having more than the **Maximum Permitted Lateness** at the **Control** will start the next section with zero lateness.

6. Special Stage Arrival Control

6.1. At this **Time Control** a **Marshal** enters a **Competitor's** time of arrival and the provisional starting time for a **Special Stage** which must be a minimum of three minutes after the arrival time in order to allow the crew to prepare for the stage.

6.2. The area between the **Special Stage Arrival Control** and the **Stage Start** is **Parc Fermé**.

6.3. At the **Special Stage Start** the **Marshal** will enter the actual **Start** time which will normally correspond with the provisional **Start** time. The **Start** will then be given in accordance with the standard start procedure deployed by the **Organiser**s on the **Event**.

7. Special Stage Finish Control

7.1. **Competitor**s will receive their **Special Stage Finish Time**s in hours minutes and seconds at the **Special Stage Finish Control**. This time in hours and minutes will be the start time for the next section.

8. Timing

8.1. All **Special Stage Rallies** may use either **Target Timing** or **Scheduled Timing**.

8.2. An **ASN Rally Timekeeper** or above must be appointed as a **Chief Timekeeper** for all **Clubman** and **Interclub Single Venue Stage Rallies**.

8.3. **National Single Venue** and all **Multi Venue Stage Rallies** must appoint an **ASN**-approved **National Rally Timekeeper** or higher grade.

8.4. **Time**s will be recorded to whole minutes on all sections except **Special Stage**s which will be timed to the nearest preceding whole second unless the **Official Documents** specify that timing will be to the nearest preceding 1/10th of a second. **Penalties** will be applied in accordance with App.8(f) or App.14(g) as applicable.

8.5. All **Timekeepers** will be **Judges of Fact** in respect of time recorded.

9. Target Timing

9.1. Definitions for **Target Timing**

a. **Target Time** is the time specified to cover the distance between two consecutive **Control**s. A **Competitor** can calculate **Due Time** of **Arrival** at any **Time Control** by adding the **Target Time** for the section to the actual time of departure from the preceding **Time Control**. Each period of time shall be treated individually and no penalties incurred will apply to any subsequent section. However lateness taken over **Target Time** on **Road Section**s and **Special Stage**s is cumulative and cannot be reduced.

b. **Bogey Time** is the time specified for a **Competitor** to complete a **Special Stage** without incurring penalty.

c. **Stage Maximum Time** is the maximum time penalty that can be applied on a **Special Stage** and will be the **Target Time** for the stage. It must be specified on the **Time Card**.

d. **Cumulative Lateness** is the sum of times in excess of **Target Time** taken over each section and once lost cannot be regained.

e. **Maximum Permitted Lateness** is the amount of **Cumulative Lateness** which if exceeded from the previous **Main Control** will result in a **Competitor** being deemed to have retired. This will be 30 minutes unless the **Official Documents** specify a different period which may not be less than 15 minutes for rallies where part of the itinerary uses public roads open to the public.

f. **Penalty**-free **Cumulative Lateness**. The **Official Documents** must specify the amount of **Cumulative Lateness** if any is allowed free of penalty before a **Competitor** will be penalised.

g. **Dead Time** is the authorised time between booking in at the end of one **Target**-timed section and the commencement of the next section. The time must be spent entirely within a **Control** zone. **Dead** time will have no effect on penalties or **Cumulative Lateness** incurred elsewhere.

h. **Delay Allowance** is a penalty-free allowance granted to specific **Competitor**s following a delay under the instructions of an authorised **Official**. It has the effect of extending the **Target Time** for those **Competitor**s on that **Section** only. Such delay allowance must be recorded in writing on a **Competitor**'s **Time Card** by the **Official**.

10. Scheduled Timing

10.1. Definitions for **Scheduled Timing**

a. **Standard Time** is the time of day a notional **Competitor** number zero would be due at any **Control** or check.

b. **Scheduled Time** is the actual time of day each **Competitor** is required to be at any specific point.

c. **Scheduled Time** can be calculated for any point by taking a **Competitor**'s **Competition Number** multiplying by the time interval between **Competitor**s at the start and adding the result to the standard time at that point.

d. **Delay Allowance** is an allowance free of penalty granted to specific **Competitor**s following a delay under the instructions of an authorised **Official** of the **Event**.

e. Any **Delay Allowance** must be recorded in writing on the **Competitor**'s **Time Card** by that **Official**.

f. **Due Time** is the time a **Competitor** is due at any **Control** or check inclusive of any previous lateness.

g. **Penalised Time** is the difference between **Due Time** and an earlier or later arrival time.

h. **Penalty Free Lateness** allows a **Competitor** late at one **Control** to be an equivalent amount late at a succeeding **Control** without incurring further penalty.

i. **Outside Total Lateness** (**OTL**) is the point where a **Competitor** is considered not to have visited a **Control** or check being more than 30 minutes past the **Scheduled Time** (including any delay allowance) unless the **Official Documents** specify a different period which may not be less than 15 minutes for rallies where part of the itinerary traverses public roads open to the public.

10.2. The **Organiser**s can require any **Competitor** who is late to reduce their lateness by either foregoing or reducing any period of time provided for remaining at a **Control** or official halt.

10.3. **Competitor**s may themselves reduce lateness without penalty in the following ways unless either forbidden to do so by the **Official Documents** or if by so doing they commit a breach of **Art.10.5** below:

a. By reporting at any **Control** following one at which a penalty was applied for lateness at any time not earlier than **Scheduled Time**.

b. By missing a **Control** or **Control**s. The **Competitor** will be penalised in accordance with **App. 14 (a) or (b)** for every **Control** missed. On rejoining the route at a **Control** at the end of **Road Section** the **Competitor** will be permitted to restart without further penalty at any time between their original **Scheduled Time** and their **Maximum Permitted Lateness** in relation to their original **Scheduled Time**.

c. If the need arises for an **Organiser** to extend **Maximum Permitted Lateness** this can only be done at a point on the route at which **Competitor**s are required to report to avoid **Disqualification**. **Maximum Permitted Lateness** can then only be extended for the following part of the route and cannot be applied retrospectively for earlier sections.

These provisions are subject to **Standard Condition 4** of the **Motor Vehicles** (**Competition**s and **Trials**) **Regulation**s where applicable.

10.4. No **Penalty Free Lateness** or official delay allowance that has been either reduced or foregone as permitted by Art. 25 above can be reclaimed but this does not exclude fresh claims based on new circumstances.

10.5. A **Competitor** found to have traversed a distance greater than four miles between two consecutive time **Control**s in less than three-quarters of the time ['the ¾ Rule'] specified by the official time schedule will be penalised by the addition of 30 minutes for the first offence and **Disqualification** for a second offence (see **App.14**). In calculating the penalty any fraction of minute will be ignored. The ¾ rule does not apply to sections of less than 8 minutes scheduled duration.

This **Regulation** does not preclude the **Organiser**s providing specific sections for time recovery for example:

a. In a nine minute section a penalty is imposed if a **Competitor** completes a section in less than six minutes.

b. In a 10 minute section – seven minutes.

c. In an 11 minute section – eight minutes.

d. In a 12 minute section – nine minutes.

10.6. **Time**s will be recorded to whole minutes unless the **Official Documents** state otherwise.

10.7. Any timing to less than one minute will be recorded on equipment under the **Control** of the **Chief Timekeeper**.

10.8. **Competitor**s will be timed by the official timepieces in the charge of **Official**s unless the **Official Documents** state that watches carried by the **Competitor**s can be used.

10.9. The definitions of the following terms are as provided at **Art.9 above**.

a. **Bogey Time**

b. **Stage Maximum Time**

10.10. The definitions of the following terms are provided at **Arts. 4–7 above**.

a. **Main Time Control**s

b. **Regroup**ing **Control**s

c. **Special Stage Arrival Control**

d. **Special Stage Finish Control**.

11. Penalties

11.1. **Competitor**s will receive penalties on **Special Stage**s as follows:

a. **Under Bogey**: **Penalty** = **Bogey Time**

b. **Over Bogey** but under **Stage Maximum** time: **Penalty** = Actual time taken

c. **Over Stage Maximum**: **Penalty** = **Stage Maximum Time**

11.2. **Organiser**s may require any **Competitor** who is late to reduce their lateness by either foregoing or reducing any period of time provided for remaining at a **Control** or official halt.

11.3. If the need arises for an **Organiser** to extend **Maximum Permitted Lateness** this can only be done at a point on the route at which **Competitor**s are required to report to avoid **Disqualification**. **Maximum Permitted Lateness** can then only be extended for the following part of the route and cannot be applied retrospectively for the earlier sections. These provisions are subject to **Standard Condition 4** of the **Motor Vehicles** (**Competition**s and **Trials**) **Regulation**s where they apply.

11.4. No **Penalty-Free Lateness** or official delay allowance that has been either reduced or foregone as permitted by these **Regulation**s may be reclaimed but this does not exclude fresh claims based on new circumstances.

12. Target Timed Penalty Schedule

12.1. See **App.8.**

13. Scheduled Time Penalty Schedule

13.1. See **App.14**.

13.2. For the avoidance of doubt the application of penalties under this Appendix does not preclude the application of penalties for breach of **NCR** pursuant to **Ch.2.**

14. Results

14.1. To be classified as a finisher, a **Competitor** must report to all controls listed in the **Road Book** except as provided for in App.8(a) where two-thirds of the stages must have been completed and report to the final control within the maximum lateness specified, with the **Vehicle** in which they started.

14.2. Penalties and the results are established by adding together the times taken during the **Special Stages** and the time penalties incurred on the road sections, together with all other penalties expressed in time. The **Competitor** with the lowest total will be the winner, and so on.

14.3. If there is a tie, the **Competitor** who accomplished the best time for the first **Special Stage** will be judged the winner. If this is not sufficient to resolve the tie, the times of the second, third, fourth, etc, **Special Stages** will be taken into consideration, unless the **Official Documents** specify another method of resolving ties. This regulation can be applied at any time during the **Rally**.

14.4. **Competitors** at the conclusion of their **Competition** must sign a declaration form confirming they have not been involved in any incident that may have caused damage to persons or property, or alternatively give details of any such incident. Failure to comply will be penalised in accordance with App.8 and 14 and may be reported to the **ASN** for further disciplinary action.

14.5. **Competitors** who retire will be required to submit this form to the **Event Secretary** within 72 hours of the **Event**. Failure to return the form may be penalised by a fine of up to £100.

14.6. There must be no awards for **Competitors** who equal or improve upon the time schedules for any sections, nor for the fastest times or fewest penalties on any sections.

15. Rejoining the Rally (Rejoin Point)

15.1. **Competitors** may only rejoin the rally after missing a **Control** or **Special Stage** where permitted by the **Official Documents**.

15.2. Having missed a **Control** or **Special Stage** a **Competitor** may only rejoin the **Rally** in their seeded position. Where no such provision is made in the **Rally's** schedule to provide a restart list the **Competitor** may only rejoin at a designated rejoining point as specified in the **Official Documents**, within but not ahead of 15 places of their original seeded position.

CHAPTER 13 RALLY

Appendix 14 - Schedule Timed Special Stage Event Penalties

1. Penalties

SUMMARY OF PENALTIES TO BE APPLIED ON SCHEDULED TIMED SPECIAL STAGE RALLIES

- Performance will be assessed by one of the methods listed, either by time penalty or by the 'fails' system. The **Official Documents** must specify which system is to be used.
- *These penalties may be increased by the **Official Documents**; they may not be reduced.
- **The penalty may be increased if stated in the **Official Documents.**

The items in italics may not be varied by the **Rally Organisers.**

	Time	**Fails**
(a) Not reporting or reporting OTL at a Main Time Control	Retired	
*(b) Not reporting or reporting OTL at any other Time Control	30 minutes	1 Fail
*(c) Not complying with a requirement of the **Road Book**	10 minutes	1 Fail
(d) Not performing a **Stage** correctly	Stage Maximum	
(e) Not attempting or being ready to attempt a stage when instructed to do so	**1st Offence** - 10 minutes **2nd Offence** - Disqualification	
(f) Making a false start at a **Special Stage**	**1st Offence** – 10 seconds (plus actual false start time) **2nd Offence** – 1 minute **3rd Offence** – 3 minutes **Further Offences** – at the **Clerk of the Course'** discretion	
(g) (i) Every second taken to complete a **Special Stage** where timing is to the preceding whole second	1 second	
(g) (ii) Every second and 10th of a second taken to complete a **Special Stage** where timing is to the preceding whole 10th of a second	1 second and 10th of a second	
(h) For each minute under target time on a road **Section** or in a service area	1 minute	
(i) Only if specifically mentioned in the **Official Documents**, for each minute after due time on a road **Section** or for each minute over due time in a service area	10 seconds	
(j) For each minute before or after due time at **Main Time Control** (out)	10 second	
(k) Breach of any statutory requirement concerning the use of a motor vehicle	10 minutes	1 fail
(l) Contravention of App.13 Art.10.5 *First Offence	30 minutes	1 fail
*Second Offence	Disqualification	
(m) Excessive speed or driving likely to bring motor sport into disrepute	10 minutes	1 fail
(n) Excessive sound	10 minutes	1 fail
(o) Receiving assistance contrary to App.18 Arts.1.4–1.14	Disqualification	

(p) Breach of App.18 Art.1.3, Arts.1.7–1.8	10 minutes
(q) Breach of App.9 Arts.4, App.13 Art.14.4, App.10 Art.7.1, App.10 Art.7.2, App.10 Art.7.5, App.10 Arts.7.24 and 7.26, App.10 Art.7.27	Disqualification
(r) Unauthorised use or possession of **Pace Notes** (App.10 Arts.7.42 or unauthorised presence on a **Stage** (App.9 Art.1.7)	Disqualification and reported to the **ASN**
(s) Failure to comply with App.10 Arts.7.10–7.23	Disqualification and reported to the **ASN**
(t) Breach of **Regulations** App.2 Arts.4.17–4.22 or App.10 Art.7.30	Disqualification
(u) Breach of **Regulation** App.18 Art.1.9	Disqualification and reported to the **ASN**
(v) Breach of **Regulation** App 16 Art 7.11	5 minutes

2. Penalties left to the discretion of the Clerk of the Course which may go as far as Disqualification

(aa) Failure to follow the instructions of an official.

(bb) Further breaches of (b), (c), (d), (e), (k), (l), (m) or (n).

(cc) Repeated misbehaviour of service crew.

(dd) Reporting late for Scrutineering.

(ee) Misuse of SOS and/or OK boards.

(ff) Unauthorised testing or practicing.

(gg) Causing an obstruction.

(hh) Breaches of Regulations detailed in Chapter 2.

(ii) Failure to comply with control check-in procedures.

CHAPTER 13 RALLY

Appendix 15 - Technical Regulations - Road, Endurance and Historic Road Rally Cars

1. General

1.1. The **Vehicle** must be currently registered and taxed as a Private Car and comply with all statutory regulations as to the Construction and Use regulations (especially regarding brakes lighting tyres warning devices rear view mirrors silencers speedometers wings and windscreens).

1.2. In this section the term MODEL refers to all variants of the same family of cars. In addition to complying with Ch.7 (**Competitors Vehicles and Vehicle Safety Equipment**) and to the extent relevant Ch.8 **(Fuel and Tyres and Testing**). All **Vehicles** competing in **Road Rallies** must comply with the appropriate part of the following:

2. Body

2.1. **Bodywork** must represent the manufacturer's original profile and may include any optional extras available directly from the manufacturer.

2.2. Bumpers must be fitted.

2.3. Paintwork must be one colour or manufacturer's original colour scheme. No primer is to be visible.

2.4. **Vehicles** must not have wheel arch extensions unless fitted by the manufacturer as a standard item to the body shape.

2.5. All major internal trim as fitted to the body type by its original manufacturer when offering it for sale must be retained. Major internal trim includes headlining, inside door panels (which may be replaced with representative material) for all doors and / or rear side panels alongside the rear seat (for a 2 door car), carpets and rear seats. It does not include parcel shelves, boot carpet or boot side trims.

2.6. Front seats may be improved or replaced.

2.7. The trim including the rear seat may be cut to allow the fitting of a safety cage.

2.8. If equipped with a non-standard fuel tank it must be separated from the **Driver / Passenger** compartment by a protective bulkhead of non-flammable material preventing the passage of fluid or flame.

2.9. Full harness seat belts may be fitted.

2.10. Guards may be fitted beneath the vehicle to provide protection from damage.

3. Engines and Transmissions

3.1. **Vehicle** engines must have:

a. A maximum of four cylinders.

b. A maximum of two carburettor chokes (two single or one double).

c. A maximum of one camshaft per bank of cylinders.

3.2. Engines with more than one camshaft per bank of cylinders may be used providing that:

a. Any replacement engine comprises a block and cylinder head from the same engine family.

b. they were originally fitted with fuel injection and

c. that the fuel injection system complete with inlet manifold and throttle body is retained unmodified except as permitted in **Art.3.3.c below.**

3.3. In respect of **Art.3.2 above** it is permitted to make the following modifications to effect installation:

a. Alternative engine mountings, sump pan and exhaust manifolds.

b. Relocation of ancillaries such as alternators and steering pumps.

c. To change the orientation of the otherwise unmodified inlet manifold provided it is fitted directly to the cylinder head without the addition of an intermediate adapter device.

3.4. For diesel and petrol engines under 1500cc actual capacity forced induction is permitted providing that the complete original induction system is retained unmodified other than the replacement of the air filter element.

3.5. Fuel injection may be fitted where it was standard equipment by the manufacturer for that engine type and where the original plenum chamber and throttle body is retained for that engine type.

3.6. A standard Wankel unit will be considered as three cylinders. Twin Wankel units are prohibited.

3.7. Engines must comply with the silencing **Noise** levels and have induction air filter elements fitted that ensure the vehicle complies with noise regulations.

3.8. Only H shift pattern manual transmissions are permitted. The gear lever must remain the only means of changing gear unless an alternative method was originally fitted by the vehicle manufacturer as standard. Automatic transmissions are permitted provided that they are in their original configuration as fitted by the manufacturer to that specific **Vehicle** model.

3.9. The number and location of the driven wheels must remain as original to the model of **Vehicle.**

4. Wheels and Tyres

4.1. Wheels and tyre sizes are free but must fit within the standard unmodified wheel arch.

4.2. **Vehicles** must be fitted with tyres that are always legal for use on the **Public Highway.**

4.3. Tyres must comply with **Ch.8 App.4 Arts.2–3**

4.4. **Vehicles** must have all spare wheels securely fastened in position and must not be fitted with spiked or studded tyres or any non-skid attachments other than chains if permitted by the **Official Documents.**

5. Electrical Systems

5.1. **Vehicles** must have a maximum of four forward facing beams as well as side and indicator lights unless further restrictions are specified in the **Official Documents.**

5.2. Light pods are not permitted.

5.3. A headlamp must provide the main beam and dipped beam functions.

5.4. An auxiliary lamp provides a beam other than that provided by the headlamp. With the exception of cars built before 31st December 1946 the maximum width of the lamp body of any auxiliary lamp must not exceed 222mm.

5.5. A headlamp may consist of a single reflector with a dual filament bulb or separate reflectors each with single filament bulbs providing the functions of main beam and dipped beam separately. This will be considered as equivalent to a single dual filament headlamp unit. Lamp units comprising two reflectors where one is fitted with a dual filament bulb will be considered as a combined headlamp and auxiliary lamp. In this instance therefore no additional auxiliary lamps may be fitted.

5.6. Auxiliary lamps unless fitted by the manufacturer as standard equipment using gas discharge or LED technology are not permitted and gas discharge or LED headlamp units may not be retro-fitted.

5.7. Auxiliary lights must not be used in neutral **Sections** except in poor visibility as permitted by law.

5.8. Where more than four beams are fitted as standard only four may be used and the remainder must be rendered unusable for the duration of the **Event.**

5.9. **Vehicles** must have all lights fitted and used according to **Motor Vehicle Lighting Regulations.**

5.10. External navigational or **Marshal** lights are not permitted.

5.11. For **Events** taking place wholly between half an hour before sunrise and half an hour after sunset **Arts.5.1 5.6, 5.8** and **5.10 above** do not apply.

6. Miscellaneous

6.1. **Vehicles** may not use racing style numbers nor have any advertising except for event sponsor decals which must be incorporated within the rally plate.

6.2. **Vehicles** must be equipped with an effective method of stopping fuel supply operable by the **Driver** when normally seated (the ignition switch would normally cover this requirement).

6.3. **Vehicles** must use **Permitted Fuel** as defined in Ch.8.

6.4. Brakes are free but must comply with Construction and Use Regulations.

6.5. A hydraulic handbrake is permitted where a functioning mechanical system is also present. The hydraulic handbrake lever shall operate in an arc not exceeding 50 degrees from the horizontal (see **App. 23 Drawing number 1**).

6.6. **Vehicles** must display registration plates in compliance with the current Road Vehicles (Display of Registration Marks) Regulations.

6.7. Where an **Event** includes any **Section** or **Special Test** held wholly or in part on private property all **Vehicles** must carry a **Small Spill Kit** complying with the **NCR** and which is recommended for events held wholly on the **Public Highway.**

6.8. For **Road Rallies Navigation Rallies** and **Targa Road Rallies** held between 07.00 and 22.00hrs **Arts. 2.3** and **5.2** and **5.3** and **5.10 above** do not apply and **Art.6.1** is relaxed to permit advertising not exceeding 1250 sq cm in total.

6.9. For **Events** taking place wholly between half an hour before sunrise and half an hour after sunset **Art.6.1** is relaxed to permit advertising not exceeding 1250 sq cm in total. Also it is permitted to fit a sunstrip of no more than 90mm deep which may display the manufacturer's make or model, or the name of the **Event**, or a recognised Motor Club, or a registered charity, provided that this does not affect the Driver's view.

7. ENDURANCE ROAD RALLY

7.1. In addition to **Arts. 1 – 6.8** these **Vehicles** must comply with the following **Arts.7** inclusive.

7.2. Standard production specification engines limited to 1400cc naturally aspirated petrol, 2000cc naturally aspirated diesel and 1400cc forced induction diesel are permitted.

7.3. The exhaust system is free but must retain the original exhaust manifold.

7.4. Where originally fitted with a catalytic converter the standard part must be retained.

7.5. The transmission must be as originally fitted to the model of vehicle.

7.6. Any changes to the gearbox or final drive are prohibited.

7.7. The suspension type and mountings must remain the same as that fitted by the manufacturer.

7.8. The shock absorbers may be of any make and may be uprated from standard.

7.9. Adjustable spring platform struts are permitted. The mounting method and position must remain as specified by the manufacturer.

7.10. Springs are free but must retain their original location.

7.11. Bushes may be changed for similar polymer materials but rose-joints or similar metal joints are prohibited.

7.12. Vehicles must be fitted with rollover protection of a minimum conforming to **Ch.7 App.13 Diagram 10** and seat belts conforming to **Ch.7 App.7 Art.9.4–9.6**. Sunroofs must either be fitted with safety film conforming to **Ch.7 App.2 Arts.22.7–22.8** or comply with **Ch.12 App.13 Art.11.8.**

7.13. Brake fluid pads and linings and stone protection are free.

7.14. For daylight **Endurance Road Rallies** it is permitted to fit a sunstrip of no more than 90mm deep which may display the manufacturer's make or model or the name of the **Event** or a recognised Motor Club or a registered national charity provided that this does not affect the **Driver's** view.

7.15. Must use tyres from **Ch.8 List 4.**

7.16. All vehicles must carry a **Small Spill Kit** complying with the **NCR.**

8. HISTORIC ROAD RALLY CARS

9. Series Production Cars

9.1. Note: In this section the term MODEL refers to all variants of the same family of cars. To avoid misunderstanding competitors are advised to obtain a copy of the appropriate manufacturer's documentation as to the standard specification of the car.

9.2. **Historic Road Rally Cars** are categorised in the following periods. A **Vehicle** will be dated by the specification presented and not necessarily by the date of build or registration:

a. **Historic Category 1 Road Rally Cars**. **Vehicles** of a specification valid before 1 January 1968 and compliant with all of: **Art.2.2 above** (except **Sports Cars** which need not be fitted with bumpers) and **Art.2.7** and **Art.3.7** and **Art.4.1** and **Art.4.5** (also see **Art.11.2 below**).

b. **Historic Category 2 Road Rally Car**. **Vehicles** of a specification valid between 1 January 1968 and 31 December 1974 and compliant with **Arts.2.2–6.8 above** inclusive (see also **Art.11.2 below**). For **Road Rallies** and **Rallies** with **Special Tests** held between 07.00 and 22.00hrs **Arts.3.1(a)-3.1(c)** above inclusive do not apply.

c. **Historic Category 3 Road Rally Cars**. **Vehicles** of a specification valid between 1 January 1975 and 31 December 1981 compliant with their **FIA** Group 1 or 3 homologation papers or be a **Series Production Car** and comply with **Arts.2.2–6.8 above** inclusive (see also **Art.11.2 below**).

Historic Category 2 and **3 Road Rally Cars** are permitted to use matt black bonnets and wing tops subject to **Art.9.3 below**.

d. **Historic Category 4(a) Road Rally Cars**. **Vehicles** of a specification valid between 1 January 1982 and 31 December 1985 or **Historic Category 4(b) Road Rally Cars**. **Vehicles** of a specification valid between 1 January 1986 and 31 December 1990 compliant with their FIA Group A or N homologation papers or be a **Series Production Car** and comply with **Arts.2.2–6.8 above** inclusive (see also **Art.11.2 below**).

e. **Vehicles** homologated in **FIA Group A** are permitted provided they are in standard production specification the only modifications permitted (see also **Art.10.1 below**) are to dampers springs and brake friction material. Individual **Vehicles** will only be accepted after receiving **ASN** approval.

f. **FIA Appendix K** to the **International Sporting Code:** **Historic Road Rally Cars** fully compliant with the current **FIA Appendix K** categories **T (Touring Car/Group1/Group N)** and **GT (Grand Touring Cars/Group 3)** only. These **Vehicles** must have been issued with a valid **FIA Historic Technical Passport (HTP)** or **Historic Regularity Car Pass (HRCP)** and must always fully comply with the document and the current **FIA Appendix K.**

10. Permitted Modifications

10.1. Only period modifications used in rallying on the particular make and model of **Vehicle** are permitted for **Historic Road Rally Cars.**

10.2. Modifications are only allowed if they were available before 1 January 1968 in the case of **Historic Category 1 Road Rally Cars** before 1 January 1975 in the case of **Historic Category 2 Road Rally Cars** before 31 December 1981 in the case of **Historic Category 3 Road Rally Cars** before 31st December 1985 in the case of **Historic Category 4(a) Road Rally Cars** or before 31st December 1990 in the case of **Historic Category 4(b) Road Rally Cars.**

10.3. Roof vents are only permitted subject to the above.

11. Recommended Classes

11.1. Along with the mandatory **Historic Road Rally Classes** requirements classes can be introduced based on capacity and / or age of **Vehicle**. It is recommended that they be the same as for **Historic Stage Rallies.**

11.2. Certain waivers may be available for **Historic Road Rally Cars** entered in **Road Rallies** and **Rallies** with **Special Tests** solely for vehicles manufactured before 31st December 1946.

11.3. The **ASN** may also grant discretionary waivers for **Historic Road Rally Cars** complying with **Art.9.2 above** in respect of **Arts.3.1–3.4 above** as appropriate for **Road Rallies** and **Rallies** with **Special Tests** held between 07.00 and 22.00hrs providing an **Historic Grade Eligibility Scrutineer** is appointed.

11.4. Application for waivers must be made to the **ASN** by the **Organisers** of the specific **Event** giving full details of the waivers sought.

11.5. Any such waivers will be exclusive to an individual Motor **Club** and the nominated **Event.**

11.6. Exceptionally the **ASN** may grant a written dispensation to use non-original parts from a different model or parts from a later period provided that the use of these parts does not confer an advantage in either performance or reliability and the **Decision** of the **ASN** is final and not susceptible to any form of **Appeal**. The **ASN** will consider written requests from **Competitors** who are unable to source vital components.

12. Engine

12.1. Forced induction is permitted if by means of a mechanically driven supercharger or by an exhaust driven turbocharger if fitted as original equipment by the **Vehicle** manufacturer. Such **Vehicles** will be classified as having an engine capacity increased 70%.

12.2. Induction air filter elements must be fitted that ensure the **Vehicle** complies with noise regulations.

12.3. Exceptionally and with the permission of the **Chief Scrutineer** those **Vehicles** for which 5000rpm is inappropriate may be tested at 3/4 of maximum rpm.

13. Wheels Tyres and Brakes

13.1. **Vehicles** must always be fitted with tyres that are legal for use on the **Public Highway.**

13.2. The size of the wheel may not differ from that originally fitted by more than 10% on nominal diameter and/or by 1 inch (25.4mm) on nominal width.

13.3. **Vehicles** originally fitted with 10 inch diameter wheels may increase to 12 inch diameter wheels.

13.4. The minimum diameter permitted is 15 inches unless a smaller diameter was fitted as original equipment.

13.5. The tyre section as marked on the side wall in millimetres or inches must not differ by more than 1 inch (25.4mm) from that originally fitted.

13.6. The fitting of a dual master cylinder or any other type of device providing a simultaneous action on all four wheels and divided action on two wheels is permitted provided the original brake pedal and pivot point are used and it must be possible under all conditions, running or stationary, for 25% minimum braking effort to be applied by the driver through the braking system to each axle. For **Cars in Category 1** the adjustment of brake balance must not be possible by either the **Driver** or the **Co-Driver** when normally seated in the car.

13.7. A hydraulic handbrake is permitted where a functioning mechanical system is also present. The hydraulic handbrake lever shall operate in an arc not exceeding 50 degrees from the horizontal (See **Drawing 1 App.23**).

13.8. For **Vehicles** in Categories 2 or 3 or 4 **Art.13.6** does not apply where OE specification tyre aspect ratios are less than those specified therein.

14. Miscellaneous

14.1. **Vehicles** must not use racing style numbers nor carry advertising other than event sponsor decals. **Permitted Fuel** must be used as defined in **Ch.1 App.1 (Nomenclature and Definitions).**

14.2. Where an **Event** includes any **Section** or **Special Test** held wholly or in part on private property all **Vehicles** must carry a **Small Spill Kit** complying with **NCR Regulations** and which is recommended for **Events** held wholly on the **Public Highway.**

14.3. For events in accordance with **App.15 Art.5.11**, retro fitted gas discharge or LED headlamp units are permitted.

15. Standard Production Cars compliant with Art. 9.2.c and d. must comply with Arts.9.3–14.2 inclusive and the following regulations:

a. **Body (External).** No changes or additions may be made to the side or plan silhouettes to that offered by the manufacturers in either standard form or manufacturer's optional extra form. The replacement of any body panel with one constructed of different material from that fitted by the manufacturer is prohibited. Front and rear bumpers must be retained and be of the same dimensions and constructed of the same material as those fitted by the manufacturer

b. The fitting of any form of additional wheel arch extension is prohibited.

c. **Engine**. The engine fitted must in all respects conform to that fitted by the manufacturer for the model of **Vehicle.**

d. To ensure oil and / or fuel are not deposited on the **Public Highway** sumpguards and tankguards may be fitted. It is permitted to fit a guard or guards to the silencing system that must retain at least the same number of silencer boxes and expansion chambers as catalogued for the **Vehicle.**

e. **Transmission**. The gearbox shall be that as fitted to the model of **Vehicle**. Changes to the gearbox or final drive ratio other than those permitted by **Art.9.4** are prohibited.

CHAPTER 13 RALLY

Appendix 16 - Technical Regulations – Special Stage Rally Cars

1. General

1.1. In addition to complying with **Chapters 7** and **8** all cars competing in **Stage Rallies** must comply with the appropriate parts of the following:

1.2. **Vehicles** issued with a **CCLB** before 1st January 2009 refer to **Arts 2.15 - 2.17 below.**

Special Stage Rallies

2. Cars Eligible

2.1. All cars must comply with **Chapters 7** and **8** and all statutory regulations concerning the construction and use of **Vehicles.** In addition cars must:

a. Be currently registered and taxed as a private car unless specific **Event** regulations relax the requirement for taxation by virtue of the entire **Event** taking place wholly on private property.

b. Have registration documents and a valid MOT Certificate where required by law. These documents must be produced at scrutineering for all **Events** irrespective of whether or not part of the **Event** takes place on the **Public Highway**.

c. Have a valid **ASN Competition Car Log Book** / **Vehicle Passport** that must be produced at scrutineering.

d. Display registration plates in compliance with the current **Road Vehicles (Display of Registration Marks) Regulations.**

e. All **Vehicles** must carry a **Small Spill Kit** complying with **ASN Regulations.**

2.2. **Category 1**: Those that have been homologated in Groups 'A' or 'N' of the FIA Appendix 'J' or Groups 1 2 3 or 4 of the 1981 **FIA** Appendix 'J' Non homologated **Series Production Cars** or **Specialist Rally Cars.**

a. A **Specialist Rally Car** is a **Vehicle** of which at least 20 examples are manufactured within a consecutive twelve month period and is fitted with a **Series Production Car Engine** or **Specialist Competition Engine.**

b. Modifications are free within **ASN Vehicle Regulations** and where permitted as defined below in **Arts.3 - 10**.

c. The **Vehicle** must be in the configuration as supplied by the manufacturer with the engine (any **Series Production Car Engine** or **Specialist Competition Engine**) in the original location.

d. **Vehicles** must retain the original number of and location of driven wheels Front Wheel Drive (FWD) Rear Wheel Drive (RWD) or Four Wheel Drive (4WD) except where a 4WD car other than a **Specialist Rally Car** is converted to Two Wheel Drive (2WD) without structural alteration.

2.3. **Category 2**: Any **Vehicle** not complying with **Art.2.2.a–d.** above that may be authorised for use at the discretion of the **ASN** including **Vehicles** homologated and remaining fully compliant with **FIA** R/GT regulations.

a. Such authorisation will only be granted for **Vehicles** which retain the original manufacturer's **Chassis** / bodywork / unitary construction.

b. Substitution by a space frame **Chassis** will not be accepted.

c. Original manufacturer's bodywork must be utilised.

d. Any modifications homologated by the **FIA** may be incorporated.

e. Replica copies of manufacturers homologated body parts / aerodynamic devices will not be accepted.

f. Manufacturers of very low volume numbers of **Vehicles** will be able to apply for baseline specification registration prior to sale to individual customers.

g. The conversion of front wheel drive **Vehicles** to rear wheel drive (or four wheel drive) or of rear wheel drive **Vehicles** to four wheel drive is permitted subject to the bodyshell construction alterations from the bulkhead rearwards being limited to those detailed in **FIA** Art.279.10.3.10 and shown in **FIA Appendix J Drawings 279-1 and 279-2**. Where rear wheel drive **Vehicles** are converted to four wheel drive the bodyshell forward of the front bulkhead may be modified solely to allow fitment of front driveshafts.

h. All materials added must be ferrous and must also be welded to the **Chassis** / bodywork / unitary construction.

i. Doors and windscreen must remain in the manufacturer's original material.

j. **Vehicles** must be fitted with an engine in compliance with **Arts.4 below** and if forced induction is used the turbo / super charger must comply with **Art.4.6 below.**

k. The **Vehicle** may not be used in **Competition** until the **Competition Car Log Book** / **Vehicle Passport** has been validated by the **ASN** and returned to the **Vehicle** owner.

2.4. **Category 3**: Aluminium or Steel monocoque 2-wheel drive normally aspirated petrol or forced induction diesel production cars of a model first made on or after 1st January 1991.

a. All external panels including bumpers must be of the original shape and material. Side and rear windows may be replaced by plastic which must be mounted in the original mountings **Art.3 applies** except for **Art.3.3–3.6** and **3.8 below.**

b. Carpets headlining soundproofing and rear seat may be removed front seats to **Art.12.7 below.** All other interior trim may be removed except for the door cards / trim which must be retained and fitted in the original location. Steering wheel may be changed. All other controls switches and dash must be retained and fitted in the original location.

2.5. Engine must comply with **Art.4.10 below** regarding oil systems and the following;

a. Original induction system including air filters with a restrictor fitted upstream of the throttle body in compliance with **FIA** App J Article 256 every **Vehicle** will have a specified restrictor diameter which may be altered at any time.

b. Only the parts controlling the quantity of fuel delivered may be changed.

c. Standard exhaust manifold and systems must be retained standard stroke maximum over bore +0.60 mm.

d. Camshaft valves and pistons are free.

2.6. Original transmission must be retained using any optional or homologated ratios. Free differentials may be replaced by mechanical limited slip differentials. Unless fitted as standard active differentials are not permitted.

2.7. Suspension must comply with **Arts.6.1.a–j below** inclusive except that parts and systems forbidden by **Arts.6.1 (i)** and **(j)** are permitted when fitted as original or optional equipment by the manufacturer

2.8. Wheels and tyres must comply with **Art.7 below** inclusive except for the following;

2.9. Wheels must be the original width **Art.7.5 below** does not apply and wheel diameter is free.

2.10. Brakes must be of original specification and comply with the following;

a. Friction material free backplates may be removed or deformed

b. ABS may be disconnected

c. a hydraulic hand brake is permitted.

2.11. Minimum **Vehicle** weight will be as per the manufacturer’s data for that model.

2.12. Under shields sump and tank guards strut braces may be fitted.

2.13. The following apply as written:

a. Fuel Systems with **Art.9 below**

b. Electrical systems with **Art. 10.**

c. Safety items with **Art.12.**

2.14. The **Vehicle** may not be used in competition until the **Vehicle Passport** has been validated by the **ASN** and returned to the **Vehicle** owner.

2.15. **Stage Rally Cars with a CCLB / VP issued before 1st January 2009 and which complied with H265 or H266 of the 2008 regulations** (*contact the **ASN** for details)* must comply with **Art.2.1**, **Art.3.2**, **Art.3.9, Art.3.10**, **Art.3.12**, **Art.3.14**, **Art.4.6**, **Art.7**, **Art.8**, **Art.9**, **Art.10.1** and **Art.12** from 1st January 2012. CCLBs/ VPs for these vehicles remain valid until such time as the vehicle requires a full re-inspection following rebuilding but may be returned to Motorsport UK for updating ownership colour and other minor details.

2.16. **Stage Rally Cars with a CCLB/VP issued before 1st January 2009 and which complied with H267 of the 2008 regulations** (*contact the ASN for details)* must comply with **Art.2.1**, **Arts. 2.3.a–j, Art.3.2**, **Art.3.9, Art.3.10**, **Art.3.12**, **Art.3.14**, **Art.4.6**, **Art.7**, **Art.8**, **Art.9**, **Art.10.1** and **Art.12** from 1st January 2012 and must have been re-inspected and issued with a new CCLB / VP prior to that date.

2.17. Stage Rally Cars with a CCLB/VP issued before 1st January 2009 must comply with **Art.3.11** and **3.13 below.**

3. Body

3.1. The term body includes bodywork bodyshell unitary construction.

3.2. Must have a bulkhead between any fuel tank and filler and **Driver** / **Passenger** compartment sufficient to prevent the passage of flame or liquid. Where a fuel tank constitutes part of a bulkhead between passenger and luggage compartment an additional bulkhead must be fitted. Additional fuel tank protection may be required on inspection to obtain a **Competition Car Log Book.**

3.3. All bodyshells inclusive of removable panels and parts must be of the **Vehicle** manufacturer's specified materials specifications and minimum thickness except for bonnet front wings bumpers hatchbacks tailgates and boot lids which may be of alternative materials. Seam welding and localised gussets/reinforcement is permitted.

3.4. Except for **Vehicles** accepted under **Category 2** front wings and rear wings/rear quarter panels and inner wings may be modified solely for the purpose of fitting wheel arch extensions.

3.5. Except for **Vehicles** accepted under **Category 2** (see **Art.2.3.g above**) and cars with modifications conforming to their homologation papers (**Art.2.3 above**) floor pans bulkheads and transmission tunnels may not be modified other than by localised alteration to accommodate the fitting of an alternative engine and/or gearbox and/or differential and / or axle seats and exhaust.

3.6. Provision of access holes purely to facilitate use of an alternative or modified gearbox control system and / or braking system is permitted.

3.7. The internal routing of pipes and wires and safety equipment is permitted.

3.8. The conversion of left to right hand drive is permitted including necessary accompanying modifications.

3.9. Glass sunroofs are not permitted. Sunroofs may be of a non-shattering solid rigid material other than glass. Any sunroof must be firmly secured in the closed position. The sunroof aperture may be closed by solid material permanently fitted in place.

3.10. Windscreens to be of laminated type only.

3.11. Side windows if of glass must be of laminated or toughened glass and if of toughened glass must be coated on the inside with a clear transparent safety film. The thickness of this film must not be greater than 100 microns.

3.12. Where advertising is allowed on windscreens it must not obscure the driver's vision nor cover more than one third of the depth of the visual area of the windscreen.

3.13. The fitting of mud flaps of a flexible material of 4mm minimum thickness behind each wheel extending to a minimum of 40mm each side of the tyre tread and to within 80mm of the ground when the car is unoccupied is mandatory.

3.14. Towing eyes of adequate strength and size must be fitted to or carried for fitting to the front and rear of the **Vehicle**. They must be painted a distinctive and contrasting colour.

4. Engine

4.1. Must comply with the following specification and actual capacity limits:

4.2. **Production Car Engines**:

a. Petrol engines with a maximum of six cylinders, forced induction up to 2000cc with a 34mm restrictor or up to 2500cc with a 32mm restrictor, and diesel engines with forced induction up to 2500cc with a 37mm restrictor. All homologated, and formerly homologated, Rally2/R5 Vehicles must utilise their homologated restrictor (32mm).

b. Naturally aspirated with a maximum of six cylinders and more than 2 valves per cylinder – up to 3000cc.

c. Naturally aspirated with a maximum of six cylinders and a maximum of 2 valves per cylinder – up to 3500cc

d. Rover V8 pushrod engines up to 4000cc utilising the original Rover head castings and limited to either a maximum of 4 carburettor chokes or a single throttle body and the original plenum chamber.

4.3. **Metro 6R4** 2500cc and 2800cc (Single Plenum) engines complying with **ASN** Specification exclusive to 6R4s.

4.4. **Specialist Competition Engines**:

a. Naturally aspirated.

b. No more than four cylinders.

c. No more than four valves per cylinder.

d. Maximum capacity of 2500cc.

4.5. **Production Car Engines with a maximum of 2 rotors**:

a. Rotary engine equivalence 1.7. Forced induction rotary engines equivalence (1.7. x 1.7.) = 2.89.

b. Rotary engines will be considered equivalent to 4 valves per cylinder petrol engines in respect of the maximum engine capacity including the application of equivalency factor **a. above.**

4.6. Forced Induction engines must be fitted with a restrictor at a maximum of 50mm from the extremes of the compressor blades. The restrictor orifice to be to the dimensions currently in force in **FIA Appendix 'J'.** Where there are two forms of forced induction fitted the restrictor must not exceed the appropriate FIA Appendix 'J' dimensions. Provision must be made for fitting seals to the unit(s). A fee is payable for the sealing of turbo chargers.

4.7. Except for **Vehicles** accepted under Category 2 a **Vehicle** may be fitted with a different engine not exceeding 25% increase of the capacity of the model when it was supplied as original equipment by its manufacturer.

4.8. The engine capacity of FIA R/GT cars complying with **Category 2**. shall be limited to the current **FIA Regulations.**

4.9. **Historic Rally Cars** that are fully compliant with **App.17** are permitted without a restriction on engine capacity in **Stage Rallies.**

4.10. Engine Oil Systems – Unless equipped with a closed loop system a Catch tank of at least a one litre

capacity to be incorporated in the oil breather system.

5. Transmission and Gear Selection Systems

5.1. The transmission system is free including gear selection system which may be modified or replaced by an alternative system.

5.2. The use of active front and rear differentials i.e. any system acting directly on the differential adjustments is forbidden except for cars originally homologated by the **FIA.** Only entirely mechanical systems are allowed. None of the parameters of the front and rear differentials can be modified except with the help of tools when the **Vehicle** is stopped.

5.3. Passive viscous differentials are considered mechanical and are permitted.

6. Suspension

6.1. Except for **Vehicles** accepted under **Category 2** and **Vehicles** with modifications conforming to their homologation papers (**Art.2.3 above**):

a. The suspension must retain the operating principle and utilise the mounting points as provided by the vehicle manufacturer.

b. Strengthening of the sprung parts of the chassis and bodywork is allowed provided that the material used is the same material as the chassis/bodywork and follows the original shape and is in contact with it.

c. Springs shock absorbers anti-roll bars and control arms and links may be uprated.

d. Only mechanically operated anti-roll bar systems are authorised.

e. The anti-roll setting can only be adjusted directly by the driver using an exclusively mechanical system without external power.

f. Any connection between dampers is forbidden.

g. Any connections between front and rear anti-roll bars are forbidden.

h. The ride height must be adjustable only with the use of tools and when the car is immobile.

i. Any servo control activating a power circuit acting directly or indirectly on the suspension parts is forbidden.

j. Any electronic control system for the shock absorbers is forbidden.

7. Wheels and Tyres

7.1. Not be fitted with spiked or studded tyres or any non-skid attachments other than chains if permitted in the **Official Documents.**

7.2. Have all spare wheels securely fastened in position.

7.3. Have complete wheels (flange + rim + tyre) free providing that they can be housed within the original bodywork (including wing extensions) and that they do not exceed the widths in relation to the cubic capacity of the **Vehicle:**

a. Up to and including 1600 cc: 8in

b. Over 1600 cc: 9in.

7.4. Note: Wheel widths relate to the capacity of the **Vehicle** inclusive of the forced induction coefficient.

7.5. Rim diameters may be increased or decreased by up to a maximum of 2in but the rim diameter must not exceed 18in.

7.6. Wheels do not necessarily have to be the same diameter.

7.7. The complete wheel shall be measured with the tyre at normal running pressure.

7.8. The measurement of the width will be taken at the widest point of the complete wheel above hub level.

7.9. Wheel fixing by bolts may be freely changed to fixing by pins and nuts.

7.10. Must have tyres complying with Ch.8.

7.11. The approved quantity of tyres must be detailed in the **Official Documents.** The maximum number allowed will not exceed 10 tyres (unsealed surfaces) and 12 tyres (sealed surfaces and all **Single Venue Stage Rallies** not covered by a Master Agreement) for **Rallies** up to 45 planned competitive miles. For **Events** over 45 planned competitive miles an additional 2 tyres may be added for each return to service after 45 planned competitive miles during the **Event,** but these may not be used prior to the relevant service point.

a. In the event of an extreme weather situation (defined as: Temperatures below 0c or over 28c within the 24 hour period prior to the start of the event, or snow fall within the same 24 hour period or during the running of the event), the **Clerk of the Course** may request the **ASN Steward** to suspend the tyre allowance on the grounds of safety.

b. Where there is significantly heavy rainfall and the **Clerk of the Course** (of a Sealed surface **Event** and all **Single Venue Stage Rallies** not covered by a Master Agreement) may issue a Bulletin with the approval of the ASN Steward, declaring a 'wet' **Event**. Following which, the use of wet tyres will be permitted outside of the specified allowance on the grounds of safety.

c. Competitors found to be in excess of the tyre limit are to be penalised in accordance with App.8 (u) or App.14 (v) as applicable.

7.12. The use of any device for maintaining the performance of the tyre with an internal pressure equal to or greater than atmospheric pressure is forbidden.

7.13. The interior of the tyre (space between the rim and the internal part of the tyre) must be filled only with air or nitrogen. This does not preclude the use of inner tubes.

7.14. The use of tyre heating devices is prohibited.

7.15. For all unsealed surface **Stage Rallies** approved by the **ASN** pursuant to App.1 Arts.1.10 and 1.11 (forest estates) only those tyres specified in Ch.8 List 6 are permitted.

8. Braking Systems

8.1. Braking systems may be modified including fitment of uprated components conversion of drum brakes to disc brakes and use of alternative friction materials.

8.2. The use of non-metallic brake discs is not permitted.

9. Fuel Systems

9.1. If the filler cap is of the quick release type or where the **Vehicle** has been fitted with a non-standard filler be fitted with a recessed fuel filler cap.

9.2. Fuel lines may be installed within the **Driver** / **Passenger** compartment on safety grounds

9.3. Cars must be fitted with a self-seal connector of a type complying with Ch.7. Except as provided for in Ch.7 App.1 Art.1.5 Vehicles issued with a current Competition Car Log Book / Vehicle Passport prior to 1st Jan 2009 are not required to have a self seal connector

10. Electrical

10.1. There are restrictions concerning the use of auxiliary lights which are detailed in the sporting regulations. (Ch.13 App.12 Art.3.38).

11. Vehicle Weight Limits

11.1. All homologated **Vehicles** must conform to the minimum weights stated in their homologation documents.

11.2. All non-homologated **Vehicles** must conform to the minimum weights in the table below. The only exceptions are vehicles that have a specified minimum weight recorded in their **ASN Competition Car Log Book / Vehicle Passport.**

	Cars post 1/1/1982 & 4WD Specialist Rally Cars	Cars up to 31/12/1981	2WD Specialist Rally Cars
Up to 1000cc	660kg	655kg	
Up to 1400cc	700kg	700kg	620kg
Up to 1600cc	770kg	740kg	670kg
Up to 2000cc	850kg	810kg	720kg
Up to 2500cc	1080kg	880kg	770kg
Up to 3000cc	1150kg	945kg	880kg
Up to 3500cc	1230kg	1005kg	
Up to 4000cc	1310kg	1075kg	

11.3. The checking of **Vehicle** weights will be as set out in **FIA Appendix J.**

11.4. Note. Minimum weights relate to the cubic capacity of the car inclusive of the forced induction coefficient.

12. Safety

12.1. Have as a minimum a **ROPS** complying with **Ch.7 App.3** and **Ch.7 App.13 Diagram 14** or **15** and longitudinal door bars complying with **Ch.7 App.3 Art.12** (side sections **Ch.7 App.13 Diagram 18**.

12.2. For **Vehicles** not issued with a **Vehicle Passport** or **Competition Car Log Book** prior to 1st January 2019 – and of a make and model with a conception date post 31.12.2005 – the following additional members are mandatory:

a. Roof Reinforcement complying with **Ch.7 App.3 Art.13** and **Ch.7 App.13 Diagram 19.a, b., c.** or **d.**

b. Windscreen Pillar Reinforcement complying with **Ch.7 App.3 Arts.15** on each side if **Ch.7 App.13 Diagram 69** dimension "A" is greater than 200mm.

12.3. Be equipped with an internal switch that is capable of isolating all electrical circuits and completely stopping the engine. The operating switch must be positioned so that it can be operated by the driver and the **Co-Driver** when normally seated with seat belts fastened.

12.4. Be equipped with an external circuit breaker complying with **Ch.7 App.5 Art.5.1–5.2.**

12.5. Have currently **FIA Homologated** seat belts complying with **Ch.7 App.7** (four, five or six point).

12.6. Be equipped with fire extinguishers complying with **Ch.7** and also all the relevant parts of **Ch.7 App.6 Art.1 and Art 3.** The **Driver** and **Co-Driver** must each be able to activate the extinguisher when normally seated with seat belts fastened.

12.7. Be fitted with front seats that were **FIA Homologated** to **FIA Standard** 8855-1999 8862-2009 or 8855-2021 at the time of manufacture (but excluding seats for which the **FIA Homologation** was withdrawn) complying with **Ch.7 App.7 Arts.2.19–2.22**

12.8. For **National Events FIA Homologated** seats manufactured to **FIA Standard** 8855-1999 may be used for up to two years beyond the expiration of the original homologation label validity.

12.9. **FIA Homologated** seats manufactured to FIA Standard 8862-2009 or 8855-2021 may be used until 31st December of the year stated on the label.

12.10. Have substantial underbody protection covering any area of a fuel tank exposed to running damage.

12.11. Be equipped with high-intensity horns that can be operated by the **Driver** and the **Co-Driver.**

12.12. Competing **Vehicles** must carry an Emergency Red Warning Triangle (ECE 27) and an SOS / OK Board.

12.13. If a camera is carried the fitting must be specifically approved by a **Scrutineer.**

12.14. Belt cutter(s) must be carried on board at all times. Both driver and co-driver must be able to reach a belt cutter when seated with their harness fastened.

13. Cross Car (XC)

13.1. Cross Car (XC) are rear engine 4 wheeled (2 wheel rear drive) single seater Vehicles with a multi-tubular spaceframe chassis which must have a safety cage as an integral part of the Chassis. The ASN have adopted the FIA technical regulation guidelines and these are available upon request.

a. XC – Cross Car. A Competitor may participate from their 17th birthday. The minimum Vehicle weight with the Driver wearing full racing apparel on board and with the fluids remaining at the time the measurement is taken will be 425kg with a recommended vehicle power of 130hp.

b. XC Jnr. – Cross Car are not permitted.

c. The minimum Vehicle weight with neither the Driver nor full racing apparel and with the fluids remaining at the time the measurement is taken is 345kg. At no time during the Competition may a Vehicle weigh less than this minimum weight.

CHAPTER 13 RALLY

Appendix 17 - Technical Regulations – Historic Special Stage Rally Cars

1. General

1.1. In addition to complying with Ch.7 and Ch.8 where applicable all **Vehicles competing in Historic Special Stage Rallies must comply with the Regulations in or referred to in this Appendix. Exceptions are referred to below at Art.2.2.**

2. The principles of Historic Special Stage Rally Cars Regulations

2.1. The **ASN** has created the **Regulations** in this Appendix so that **Historic Cars** may be used for **Competitions** under a set of rules that seek to preserve the specification of their period and prevent modifications of performance and behaviour which could arise through the application of modern technology. **Historic Competition** is not simply another formula in which to acquire trophies it is a specific **Category in** which an essential ingredient is devotion to the cars and to their history and period specifications. Historic Motor Sport therefore enables the active celebration of the history of the **Motor Car.**

2.2. **Historic Special Stage Rally Vehicles** must comply with **Special Stage Rally Technical** regulations with the following exceptions App.16 Arts.2.2 and 2.3 and 3.14–4.4 inclusive and 4.6 and 4.10 and 5.3 and 6 - 7.14 inclusive and 10.1 and 11.3.

2.3. **Cars Eligible**

a. **Historic Stage Rally Cars** are categorised in the following periods. A **Vehicle** will be dated by the specification presented and not necessarily by the date of build or registration:

i. **Historic Category 1 Rally Cars**: **Vehicles** of a specification valid before 1 January 1968.

ii. **Historic Category 2 Rally Cars**: **Vehicles** of a specification valid between 1 January 1968 and 31 December 1974.

iii. **Historic Category 3 Rally Cars**: **Vehicles** homologated in Groups 1, 2, 3 or 4 between 1 January 1975 and 31 December 1981. **Vehicles** in Category 3 must comply with their **Homologation.**

iv. **Historic Category 4a Rally Cars**: **Vehicles** homologated in Groups A, N and B between 1 January 1982 and 31 December 1985 excluding any **Vehicles** that were regulated out by the **FIA** in period from rallies for safety reasons. **Vehicles** in Category 4 must comply with their **Homologation** forms and Appendix J of the 1985 **FIA Yellow Book**. **Vehicles** with an effective engine capacity exceeding 2000cc must have been issued with a valid **FIA Historic Technical Passport (HTP)** and must always conform with that document and with the current FIA Appendix K.

v. **Historic Category 4b Rally Cars**: **Vehicles** homologated in Groups A, N and B between 1 January 1986 and 31 December 1990 excluding any **Vehicles** that were regulated out by the **FIA** in period from rallies for safety reasons. **Vehicles** in Category 4b must comply with their **Homologation** forms and Appendix J of the 1990 **FIA Yellow Book** and **Vehicles** with an effective engine capacity exceeding 2000cc must have been issued with a valid **FIA Historic Technical Passport (HTP)** and must always conform with this document and the current FIA Appendix K.

vi. **Historic Category 5 Rally Cars: Historic Rally Cars** homologated between 1 January 1991 and 31 December 1999 **fully compliant with the current FIA Appendix K** periods **K** and **KC**. World Rally Car evolutions (**FIA Appendix K** Period KRC) are not permitted. **Vehicles** in Category 5 must comply with their **Homologation** forms and must have been issued with a valid **FIA Historic Technical Passport (HTP)** and must always conform with this document and the current FIA Appendix K.

vii. **FIA Appendix K to the International Sporting Code: Historic Rally Cars** fully compliant with the current **FIA Appendix K**. World Rally Car evolutions (**FIA Appendix K** Period KRC) are not permitted. Cars must have been issued with a valid **FIA Historic Technical Passport (HTP)** and always conform with that document and with the current **FIA Appendix K. Vehicles** are exempt from the requirement to hold and present at scrutineering an **ASN Competition Car Logbook** or **Vehicle Passport**.

3. Historic Categories 1, 2, 3, 4 and 5

3.1. A valid **Historic Rally Vehicle Identity Form (HRVIF)** (or **FIA Historic Technical Passport (HTP)** issued by an **FIA** registered **ASN**, as appropriate), in addition to a **CCLB/ Vehicle Passport** must be obtained from the **ASN** and both must be presented at scrutineering. No **Vehicle** is permitted to compete on an **Event** unless those documents are presented at scrutineering. The **HRVIF** is the definitive document for the technical specification of the vehicle for which it has been issued.

3.2. The **HRVIF** will remain valid for a period of 10 years from the date of issue and must be renewed whenever the registered owner of the **Vehicle** changes.

3.3. **Vehicles** in any of the **Categories** registered after the appropriate date may be permitted to hold an **HRVIF** in the absolute discretion of the **ASN**. An applicant fo**r HRVIF** for such a car must provide documentary evidence to the **ASN Technical Department** with the identity form application to show that the specific **Vehicle** (not model) was manufactured within the specified period. This evidence will include any technical documentation supplied by the manufacturer and any documents relative to the **Vehicle** and any information available concerning Chassis and engine numbers and any other details from reliable and authenticated sources as may be available. On receipt of satisfactory evidence the **ASN** may issue an **Historic Rally Vehicle Identity Form** which must be presented at scrutineering with the registration document in accordance with **Art.2.2 above.**

3.4. **Category 3**, **Category 4** and **Category 5 Vehicles** must also present their **Homologation** forms at scrutineering.

3.5. Upon issue of the validated HRVIF the applicant will be issued with two individually numbered **ASN Registered Historic Rally Vehicle** stickers (see **App.23 Drawing Number 3**). These stickers are a visual affirmation of conformity with these Regulations and therefore must be affixed to the **Vehicle** one per side located on the rear section of the front wing and failure to respect this requirement is a breach of these **Regulations** and will render the **Vehicle** ineligible to compete and the **Competitor** subject to **Judicial** action.

3.6. A **Licensed Eligibility Scrutineer** may remove the **ASN** stickers (see **App.23 Drawing Number 3**) if the **Vehicle** is found not to comply with any of the provisions of this **App.17**.

4. Permitted Modifications

4.1. Only period modifications legally used in rallying on the particular make and model of car are permitted for Historic Category 1, 2, 3, 4 and 5 Rally Cars. The modifications must be detailed on the HRVIF (or **FIA Historic Technical Passport (HTP)**, as appropriate) and be duly ratified by the **ASN** (or FIA as appropriate).

4.2. Modifications are only allowed if they were available before:

a. 1 January 1968 for Historic Category 1 Rally Cars.

b. 1 January 1975 for Historic Category 2 Rally Cars.

c. 1 January 1982 for Historic Category 3 Rally Cars.

d. 1 January 1986 for Historic Category 4a Rally Cars.

e. 1 January 1991 for Historic Category 4b Rally Cars.

f. 1 January 2000 for Historic Category 5 Rally Cars.

4.3. In all cases the onus of proving a modification as being period rests with the Competitor who must submit the required documentary evidence.

4.4. Exceptionally the ASN in its absolute discretion may grant a dispensation to use non-original parts **and or parts from a different model and or parts from a later period provided that the use of these** parts does nor confer any advantage in either performance or reliability. The ASN will give consideration to written requests from Competitors who can evidence that they are unable to source vital components.

4.5. Competitors will be notified by means of an **ASN Official Bulletin** of any part subject to dispensation and a full list of dispensations will be published on the **ASN website.**

5. Engine

5.1. Cylinder bores may be 60 thousandths of an inch oversize without affecting class eligibility.

5.2. Four-wheel drive vehicles fitted with forced induction are prohibited in Historic Categories 1, 2 and 3.

5.3. Forced induction is only permitted if by means of a mechanically driven super-charger, or by an exhaust driven turbocharger if fitted as original equipment by the vehicle manufacturer **App.16 Art.4.2.a.** Such **Vehicles** in Category 1, 2 and 3 will be classified as having an engine capacity increase of one third. **Vehicles** in Category 4a and 4b will be classified as having an engine capacity increase of 70% and must be fitted with a 34mm restrictor at a maximum of 50mm from the extremes of the compressor blades. **Vehicles** in Category 5 must be fitted with a restrictor of dimensions in compliance with the current **FIA Appendix K** and will be classified by the corrected capacity as detailed on the **FIA Historic Technical Passport (HTP)**.

5.4. Engines must comply with **ASN** silencing levels. Exceptionally and with the permission of the **Chief Scrutineer** those cars for which 5000rpm is inappropriate may be tested at 3/4 of maximum rpm.

5.5. **Vehicles** in Category 4 equipped with rotary engines will be subject to an equivalency factor of 2:1.

6. Safety

6.1. **Vehicles** must be equipped with a safety rollover bar in accordance with **Ch.7 App.3 Art.1 – 20** and **22** inclusive, and **Ch.7 App.13 Diagram 45 a)** or **b)**. Dotted lines signify optional features.

6.2. Door bars may be of single tube, crossed tube or twin tube design **Ch.7 App.13 Diagram 21 (g)**, **(h)** or **(i)**.

6.3. A single **Diagonal Member** is mandatory and a second **Diagonal Member** may be added to form crossed diagonals. Diagonals may be either installed across the **Main Rollbar** or between the **Backstays.**

6.4. Additional tubes for the mounting of harness shoulder straps are permitted.

6.5. All bars must remain within the confines of the **Passenger** compartment and must not be used as suspension pick-up point bracing unless the **Competitor** can prove that this was done in period to the specific model.

6.6. **Vehicles** in Category 4 must comply with **App.16**.

6.7. Belt cutter(s) must always be carried on board during an **Event**. Both **Driver** and **Co-Driver** must be able to reach a belt cutter when seated with their harness fastened.

7. Wheels, Tyres, Suspension and Brakes

7.1. Wheels and tyres must be fitted in compliance with **Ch.8 App.4 Art.2** and **Art.4.1 of this Appendix** except as follows: **App.16 to this Chapter Arts.7.1** and **7.2** and **7.4** and **7.6–7.8** and **7.10–7.15** and must conform with the following:

a. For Categories 1, 2 and 3 the diameter of wheel may not differ from that originally fitted by more than 10%.

b. For Categories 1, 2 and 3 the complete wheels (flange + rim + tyre) are free providing that they are housed within the permitted bodywork and that they do not exceed the following widths in relation to the cubic capacity of the **Vehicle**:

i. Up to 1150 cc: 7in

ii. Over 1150cc and up to 1600 cc: 8in

iii. Over 1600 cc: 9in.

c. For Category 4, 5 and **Vehicles** competing under **FIA Appendix K** all wheels and tyres must comply fully with **FIA Appendix K Regulations** for **Vehicles** in **Rallies.**

7.2. The fitting of a dual master cylinder or any other type of device providing a simultaneous action on all four wheels and divided action on two wheels is permitted provided the original brake pedal and pivot point are used and it must be possible under all conditions, running or stationary, for 25% minimum braking effort to be applied by the driver through the braking system to each axle. For **Cars in Category 1** the adjustment of brake balance must not be possible by either the **Driver** or the **Co-Driver** when normally seated in the car.

7.3. Dampers must be in accordance with **Ch.13 App.17 Art.4**. For **Categories One, Two** and **Three**, **Monotube** dampers must not have any external gas inlet ports or adjusters, including plugged or blanked-off ports or adjusters.

8. Miscellaneous

8.1. The use of gas discharge technology in any forward-facing lights either main beam or auxiliary or in any reversing light is not permitted.

8.2. Unless of the specification used in period for the specific make and model of **Vehicle** the use of light pods to individually mount or to mount auxiliary lights as one unit is not permitted.

8.3. Roof vents may only be fitted if of the same specification as those fitted to the particular make and model of the car in period.

8.4. Any underbody protection must be of period specification. A guard moulded closely to the vehicle floor pan fixed by bolting and/or adhesive may be fitted but must not extend beyond the front and rear axle centre lines and the outer 100mm on each side must not cover the vertical section of the outer sills

9. Stage Rally Class Structures

9.1. Refer to **App.24 Art.1.1**. All Stage Rallies must use the Class structure detailed in **App.24 Chart 50**.

CHAPTER 13 RALLY

Appendix 18 - Servicing and Organised Assistance

1. General

1.1. **This Appendix must be read in conjunction with all applicable Appendices to this Chapter.**

1.2. **Any breach of these Regulations may be treated as a breach of the NCR.**

1.3. Organised assistance or **Service** anywhere other than in permitted areas is forbidden.

1.4. Organised assistance (service) may be Permitted on **Special Stage Rallies** if the **Official Documents** allow and providing that the **Organisers** have provided suitable service areas with **Time Controls** and a specific time allowance is permitted for **Service.**

1.5. **Single Venue Stage Rallies** must allocate a minimum time for Service.

1.6. An exception to **Arts.1.4–1.5 above** with regard to time allowances applies for retired cars intending to apply for a re-start permitted by the **Official Documents.**

1.7. Service of a competing **Vehicle** may only be carried out in permitted areas as defined under **Art.1.4** In any area where Service is not permitted, the presence of service crew, or any vehicle from which equipment or parts are supplied or obtained, or the setting up or the collection or the use of equipment previously deposited, will be considered to be servicing.

1.8. **Service vehicles may be required** by the **Official Documents** or the **Official Instructions** to follow a prescribed route to and from service areas. All other areas would then be 'Out of Bounds' to service vehicles and crews.

1.9. **Competitors** may only refuel in areas which have been specifically designated by the **Organisers** or by using commercially available **Permitted Fuel** dispensed directly from installed pumps at filling stations on the rally route. During refuelling, no one must be within the **Vehicle** and the engine must be stopped throughout any refuelling operation.

1.10. These **Regulations** do not prevent **Competitors** from making their own vehicles safe to drive and crews may work unassisted on their own **Vehicles** using equipment carried in their **Vehicle** in 'No Service Areas' except:

a. Within 100m of any **Control.**

b. Between a **Special Stage Arrival Control** and the **Special Stage Start Control.**

c. In any **Parc Fermé.**

1.11. The only work permitted in these areas is the following (unassisted):

Cleaning:

a. lamp glasses

b. windscreens

c. windows

d. identification markings and

e. vehicle registration numbers.

1.12. Except in the areas listed above **Competitors** may also work on their **Vehicle** with the assistance of other **Competitors** or any nationally recognised breakdown service or commercial garage not associated with the **Entrant** and not organised in advance. Such service vehicles will not be allowed to enter official service areas.

1.13. **Competitors** are responsible for ensuring that their service crews understand and comply with Regulations and if official **Service Plates** are issued by the **Organisers** that at all times the official **Service Plate** is affixed to the service vehicle.

1.14. A **Competitor** may be fined or otherwise penalised by the **Clerk of the Course** if the crew of any service vehicle associated with their entry contravene any **Regulation** or any **Official Instruction** or act in a manner contrary to the interests of the **Event** or of the **ASN** or motor sport generally. **Competitors** may also be fined by the **Clerk of the Course** and / or **Stewards** and / or the **ASN National Court** but not otherwise penalised for breach of Road Traffic Laws by their service crews.

2. Service Areas

2.1. All **Service Areas** must be under the supervision of a **Safety Officer** who should have suitable means of contacting the Emergency Services.

2.2. Special care must be taken to ensure that **Service Areas** are kept secure from spectators and that all relevant aspects of Health and Safety Regulations are observed.

2.3. Adequate fire extinguishers must be available at the site.

3. General

3.1. No service assistance may be expected from **Organisers. Competitors** are responsible for ensuring that they are supplied with fuel, oil, water etc even though **Organisers** may give advice as to where such supplies may be obtained.

3.2. A **Vehicle** may not be moved other than by its own power except:

a. By a ferry.

b. By outside means for a minimum distance necessary to extricate it from difficulty.

c. By gravity.

d. By its crew.

3.3. During the course of an **Event Competitor**s are not permitted to use or be directly or indirectly concerned in the use of helicopters or fixed-wing aircraft in the vicinity of the **Event** (whether in connection with servicing aerial surveillance or any other reason whatsoever) unless previous authority has been obtained from the ASN in writing pursuant to **Arts.3.4 - 3.6 below** and in compliance with CAA regulations.

3.4. Before considering any application for authorisation the **ASN** must be satisfied that any liabilities they consider apply to the activities including indemnity cover for the **ASN** and the **Event** promoters and **Organisers** and the landowner have been made available by the operator on their behalf to specified minimum requirements.

3.5. Any application must be made at least 14 days before an **Event.**

3.6. In accordance with CAA regulations no helicopter or fixed-wing aircraft is allowed within 500ft of the route or within 3000ft of any large crowd.

CHAPTER 13 RALLY

Appendix 19 - PR Requirements Charts

1. Chart 1

CODE	PR REQUIREMENTS
A	Personal visit to an adult member of household within 100m.
B	Letter to each householder within 100m.
C	Public notice.
D	Personally visit and obtain signature from an adult member of any household within 500m of any point where competitors are required to stop (i.e. any control or clue point).
E	Consult RLO.
F	Personal visit to an adult member of household within 150m.
G	If timed to the second, not pass through any area which has in excess of 20 occupied dwellings within 300m radius of the route, unless written agreement is given by all of the householders within that area and the Motorsport UK has given its permission.
H	Letter to each householder within 100m, unless the RLO agrees to a lesser requirement.

2. Chart 2

ALL EVENTS TRAVERSING THE PUBLIC HIGHWAY

Permit	Section	Road Type	Time	PR Requirement
ROAD RALLY (inc. HISTORIC)	STANDARD (timed to second) inc. STANDARD (time to minute)	All Classes (see App.4 Art.4.1)	23.59 to 1 hour after sunrise	A(G) D
		All Classes	24 hour	B D
	REGULARITY	A & B Habitation	22.00 to 07.00	C D
		Yellow/White UCR/Private	24 hour	H D
		A & B Habitation	07.00 to 22.00	E D
	TRANSPORT & NEUTRAL	White/UCR/ Private	24 hour	B D
		Yellow	22.00 to 07.00	E D
		Habitation A, B & (Yellow 07.00 to 22.00)	24 hour	C D

ECONOMY, NAVIGATIONAL & 12 CAR RALLIES (All types) VINTAGE (22.00 to 07.00)	STANDARD & REGULARITY	A & B Habitation	22.00 to 07.00	C	D
		A & B Habitation	07.00 to 22.00	E	D
		Yellow/White UCR/Private	24 hour	H	D
	TRANSPORT & NEUTRAL	White/UCR Private	24 hour	B	D
		Yellow	22.00 to 08.00	E	D
		A, B, Habitation & (Yellow 07.00 to 22.00)	24 hour	E	D
VINTAGE (07.00 to 22.00)	ALL	ALL	07.00 to 22.00	C	D
VETERAN	ALL	ALL	24 hour	C	D
NAV. SCATTERS	ALL	ALL	24 hour	E	D
TREASURE HUNTS TOURING ASSMS.	ALL	ALL	24 hour	E	D
SPECIAL STAGE RALLIES including SINGLE VENUE STAGE RALLIES	ROAD	A & B, Habitation	22.00 to 07.00	C	D
		Yellow	22.00 to 07.00	B	D
		White/UCR/ Private	24 hour	B	D
		A, B, Yellow Habitation	07.00 to 22.00	E	D
	ACCESS/EGRESS To/From STAGE To PUBLIC HIGHWAY	ALL	24 hour	F	E
	SPECIAL STAGE	Private or Roads Closed by appropriate Legislation	24 hour	F	

CLASSIC TRIALS and ALL OTHER EVENTS USING THE PUBLIC HIGHWAY		White/UCR/ Private	24 hour	B D
		Yellow	22.00 to 07.00	B D
		A, B, Habitation & (Yellow 07.00 to 22.00)	24 hour	C D

For Codes see above in Chart 1

CHAPTER 13 RALLY

Appendix 20 - Medical and Safety Cover

1. General

1.1. This Appendix must be read in conjunction with Ch.1 App.3 (Insurance) and Ch.11 (Emergency Medical) of the **NCR. Organisers** must check that the arrangements for **Events** conform to the **ASN** attest requirements and any published guidance. In the event of any doubt then **Organisers** must check with the **ASN** Safety or Legal Departments.

Medical and Safety Cover

2. Single Venue Stage Rallies

2.1. At each **Venue** there must be a **Doctor** or **ASN Registered Paramedic** and an **ASN Licensed Rescue Unit.**

2.2. It is mandatory that an **ASN Licensed Recovery Unit** or a **Commercially Operated Recovery Unit** is placed at or near those stage start locations where a **Rescue Unit** is positioned.

2.3. The **Chief Medical Officer** or **Chief Paramedic** being a **Doctor** or **ASN Registered Paramedic**, is responsible – in consultation with the **Clerk of the Course** and the **Event Safety Officer** – for ensuring that the required level of medical and rescue cover is provided and for:

a. the detailed organisation of doctors and

b. the planning and deployment within stages and

c. the organisation of ambulance meeting points and

d. the notification of hospitals in relation to the stages.

2.4. The **Doctor** or **ASN Registered Paramedic** and **Safety Officer** in liaison with **Stage Commanders** must be aware of the evacuation routes from the stage and rendezvous points.

2.5. The **Chief Medical Officer** at the **Event** following consultation with the **Clerk of the Course** may appoint a deputy of suitable grade who could take over the **Chief Medical Officer's** duties in an emergency.

3. Stage Rallies (other than Single Venue Stage Rallies)

3.1. At **Clubman, Interclub** and **National Multi-Venue Stage Rallies** there must be a **Doctor** or **ASN Registered Paramedic** and an **ASN Licensed Rescue Unit** at every **Stage** (or group of **Stages** (with a maximum three in close proximity to each other)).

3.2. A **Chief Medical Officer** or **Chief Paramedic** who must be a doctor or **ASN Registered Paramedic,** must be appointed who is responsible – in consultation with the **Clerk of the Course** and the **Event Safety Officer** – for ensuring that the required level of medical and rescue cover is provided and for :

a. the detailed organisation of doctors,

b. the planning and deployment within **Stages**

c. the organisation of ambulance meeting points and

d. the notification of hospitals in relation to the **Stages.**

3.3. The **Chief Medical Officer** at the **Event** or **Chief Paramedic** following consultation with the **Clerk of the Course** may appoint a deputy of suitable grade who could take over the **Chief Medical Officer's** duties in an emergency.

3.4. Those **Stages** without the immediate presence of an **ASN Rescue Unit** should position an **ASN Licensed SSU** at the **Stage** start.

3.5. For every **Stage** over nine miles long in addition to the above and at a suitable mid-point there must be a

Doctor or **ASN Registered Paramedic** and an **ASN Licensed Rescue Unit** or an **ASN Licensed SSU**.

3.6. It is mandatory that an **ASN Licensed Recovery Unit** or a **Commercially Operated Recovery Unit** is placed at or near those **Stage** start locations where a **Rescue Unit** is positioned.

4. International Stage Rallies (other than FIA Championships)

4.1. At every **Stage** start there must be:

a. A **Doctor** or **ASN Registered Paramedic.**

b. An **ASN Licensed Rescue Unit**.

c. An **ASN Licensed Recovery Unit** or a **Commercially Operated Recovery Unit.**

For **Stages** over nine miles long these requirements must be repeated at a suitable mid-point.

5. International Stage Rallies (FIA Championship)

5.1. Medical and safety cover must be according to current **FIA Regulations**.

6. International and National Rallies

6.1. It is recommended that the **Chief Medical Officer** is appointed from the **ASN Register** and is approved for this grade of **Rally.**

6.2. A senior **Medical Officer** must be appointed on each **Stage** and be positioned at the **Stage Start** to work in close co-operation with and under the instructions of the **Stage Commander.**

7. General

7.1. ALL THE ABOVE REQUIREMENTS SHOULD BE REGARDED AS MINIMUM STANDARDS OF COVER AND HIGHER STANDARDS SHOULD ALWAYS BE AIMED FOR.

7.2. It is recommended that doctors carry all equipment that they feel necessary for the performance of their duties. The following is suggested:

- Airways (two)
- Cervical collar
- Two large field dressings
- Powerful hand torch
- Space blanket
- First aid kit.

7.3. It is recommended that **Organisers** make available a full resuscitation kit.

7.4. All accidents and incidents involving injury must be reported in writing by both the **Medical Officer** and **Stage Commander** to the **Clerk of the Course.**

7.5. A completed **ASN** report form signed by the Doctor must be sent to the **Chief Medical Officer** at the **ASN**.

Emergency Vehicles

7.6. There are three kinds of **Rally** emergency vehicles:

a. **Rally Recovery Units.**

b. **Rescue Units.**

c. **Stage Safety Units (SSUs).**

7.7. Their equipment and licensing criteria are listed in **Ch.5 Part A App.10** and **Ch.11**

7.8. To assist **Organisers** and maintain safety cover unless licensed vehicles are present **SSUs** should be used to provide rescue first aid and fire-fighting at an incident as quickly as practicable (i.e. starting from the beginning of the stage and proceeding in the direction of the **Stage**).

7.9. It is recommended that there is an SSU at each **Stage Start.**

8. Safety Cars

8.1. The only category of **Safety Car** that may be driven through a stage at near competitive speeds will be the **Zero Car.**

8.2. **Safety Cars** will be identified by carrying markings as specified in the **ASN Safety Car Roles and Responsibilities** e.g Spectator Safety / 000 / 00 / 0 and **Sweeper** as appropriate.

8.3. No other official car will carry such markings. All other sanctioned vehicles will be classified as **Official Vehicles.**

8.4. The **Zero Car** will be the last vehicle to traverse a stage before the first **Competitor** unless the **Stage Commander** or **Clerk of the Course** authorise otherwise.

8.5. The **Zero Car** will only stop in a **Stage** in the case of emergency.

8.6. **Safety Cars** must be fitted with an effective method of communicating with **Rally Control.**

8.7. Except for **Class** eligibility the **Zero Car** must pass the same pre-**Event** scrutiny as **Competitors** including **Sound Testing.**

8.8. There will only be two crew members in the **Zero Car.**

8.9. Where the **Zero Car** is a **Competition Car** then:

a. It is strongly recommended that **Zero Cars** have a current **Competition Car Log Book / Vehicle Passport.**

b. The crew members must wear overalls, helmets, FHRs and seat belts mandatory for **Competitors.**

c. Fire extinguishers must be fitted and armed as for **Competitors.**

8.10. Crew members of each **Safety Car** must be signed-on **Officials.**

8.11. At least one crew member of each safety car team must have attended an **ASN Safety Car Training Session**.

8.12. At least one member of the **Safety Car** Team must have been involved in pre-**Event** planning.

8.13. All **Safety Car** Team members must be fully briefed on the safety plans for the **Event.**

8.14. No **Driver** who is barred from holding a **Competition Licence** or **DVLA** (or equivalent jurisdiction) driving licence can drive an **Official** or **Safety** or **Zero Car** or a **Rally Emergency** vehicle through a **Special Stage.**

8.15. Detailed Guidelines on **ASN Safety Car Roles** and **Responsibilities** are contained in the **Stage Rally Safety Requirements** published on the **ASN Website** and which supplement the above requirements.

9. Fire Extinguishers

9.1. Fire extinguishers must be available in any area defined as a **Service Area** and any area in which competing cars are assembled awaiting their attempt at a **Stage** and at **Stage Stop Lines.**

CHAPTER 13 RALLY

Appendix 21 - Specific Regulations for Junior Rally Driver Championships

1.1. This Appendix must be read in conjunction with **Chapters 1 – 9 and 11**.

1.2. This Appendix modifies the relevant provisions of this **Ch.13.**

1.3. The **ASN** may approve **Championship**s for **Junior Rally Driver**s complying with the following:

1.4. All such **Championship**s must appoint a **Safeguarding Officer** approved by the **ASN** and who shall attend all **Championship Event**s.

1.5. All **Event**s comprising the **Championship** must be individually permitted **Single Venue Stage Rallies** open only to **Junior Rally Driver**s.

1.6. **Event**s may only take place at a single **Venue** and all **Stage**s road sections and service areas must not cross or traverse any **Public Highway** including **Footpaths** / **Bridleways** / **Restricted Byways / Byways Open** to **All Traffic** or unclassified country roads.

1.7. **Proposed Stage Diagrams** must be submitted for authorisation at least 3 months prior to the **Event** in order for the **ASN** to inspect the **Venue**.

1.8. **Driver**s must be at least 14 years old and may continue as a **Junior Rally Driver** until 31st December in the year of their 17th birthday.

1.9. The **Driver**s **Competition Licence** shall be endorsed **Junior Rally Formulae Only** and will be held on their behalf by the **Championship Co-ordinator**.

1.10. Except with the consent of the **ASN Chief Medical Officer Driver**s must be of a minimum height of 1.4m.

1.11. **Co-Driver**s must hold a valid **Competition Licence** and ideally be a licensed **BARS Instructor.**

1.12. **Co-Driver**s must be 21 years or over not be a **Parent / Guardian** of the driver and meet the qualifications of a **Stage Rally National Licence**.

1.13. **Vehicles** must be **Series Production Car**s that are currently registered and taxed as a private car unless the specific **Event Regulation**s relax the requirement for taxation by virtue of the entire **Event** taking place on private property.

1.14. The maximum engine capacity may not exceed 1200cc naturally aspirated.

1.15. The engine and transmission must be standard and unmodified.

CHAPTER 13 RALLY

Appendix 22 - Specific Regulations for Special Stage Practice / Training Events

1.1. Any practising or training **Event** at which members of an **ASN** registered **Club** are acting in a managing or controlling capacity as representatives require the specific permission of the **ASN** in the form of a **Permit**.

1.2. The **ASN** will not **Permit** more than three **Clubs** to organise such an **Event**.

1.3. The **ASN** will appoint an Observer to all **Special Stage Rally Practice / Training Event**s and the appropriate fees will be charged.

1.4. Participants in all practice / training **Event**s must sign the usual indemnity specified Ch.3 as well as a declaration that their **Vehicle** is in a fit condition for the **Event**.

1.5. **Permit Fees** will be in accordance with current rate for an Interclub **Permitted Event**.

1.6. Insurance per capita fees will be payable at the maximum **Special Stage** rate per **Competitor**.

1.7. There must be no spectators and entry to the **Venue** must be controlled.

1.8. **Stage**s must be organised to the requirements of App.2 Part C and App.12 Arts. 3.40–46 inclusive.

1.9. The definition of a **Practising / Training Event** must be complied with namely:

a. No **Competition**.

b. There must be no awards.

c. The sole purpose is for crews to gain experience of their **Vehicles**.

d. **Time**s may be recorded but must not be published.

e. **Vehicles** must not be started / released onto any **Stage** simultaneously.

f. The only permitted revenue obtained by the **Organiser** shall be entry fees.

1.10. No more than six attempts at any one stage layout will be permitted.

1.11. Although no awards or published times are permitted the **Organiser** must set a **Bogey Time** for the **Stage** and this time and the length of the stage must be notified in writing to the participants.

CHAPTER 13 RALLY

Appendix 23 - Rally Drawings

Drawing 1

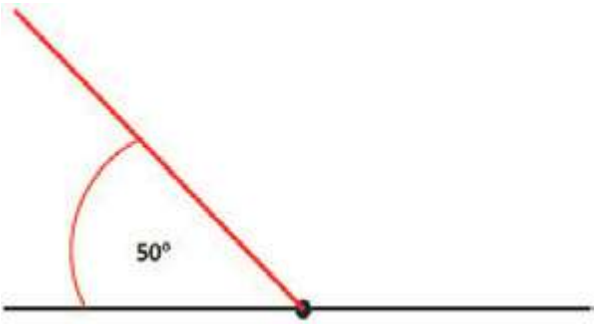

Drawing 3

Drawing 2

K22.4.2. Forward Facing Beams

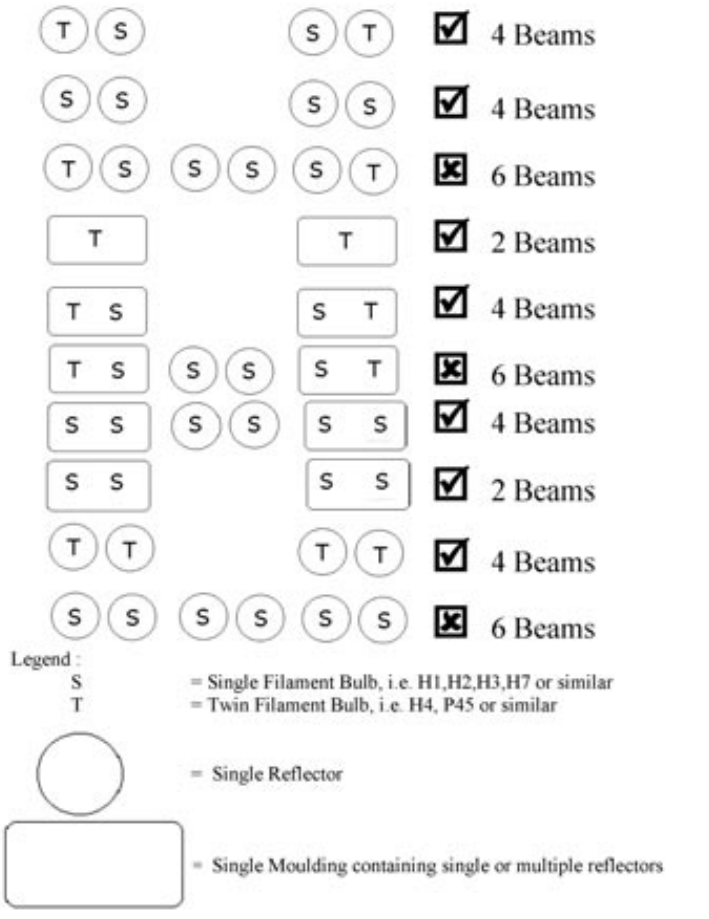

Legend :

S = Single Filament Bulb, i.e. H1,H2,H3,H7 or similar

T = Twin Filament Bulb, i.e. H4, P45 or similar

= Single Reflector

= Single Moulding containing single or multiple reflectors

The above is not exhaustive, but illustrates the most common permutations. Note any other lamps emitting a forward facing beam, typically bumper or spoiler mounted may not be operational/used.

Drawing 4

CHICANE ENTRANCE BOARD

Examples of a typical chicane layout:

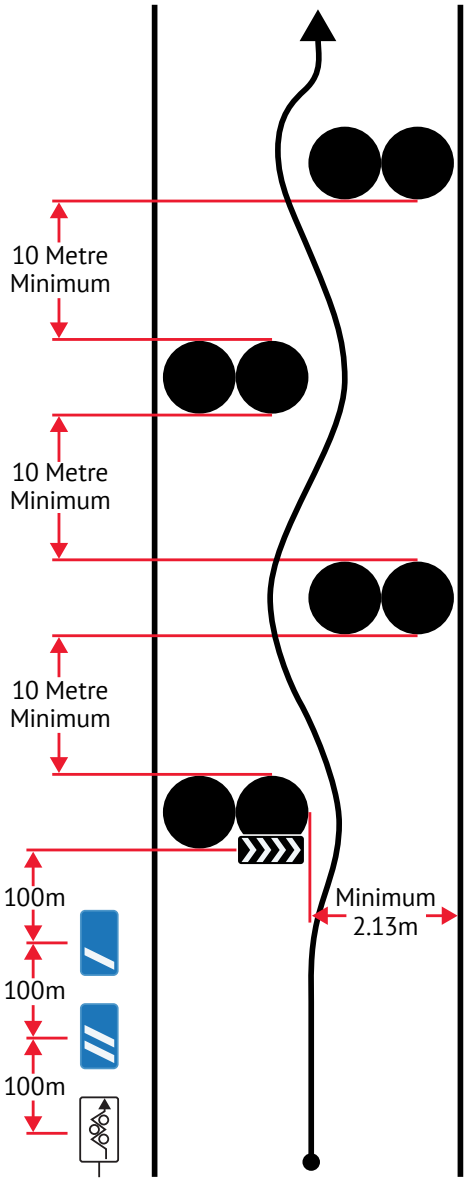

CHICANE ENTRANCE BOARD

Examples of a typical chicane layout:

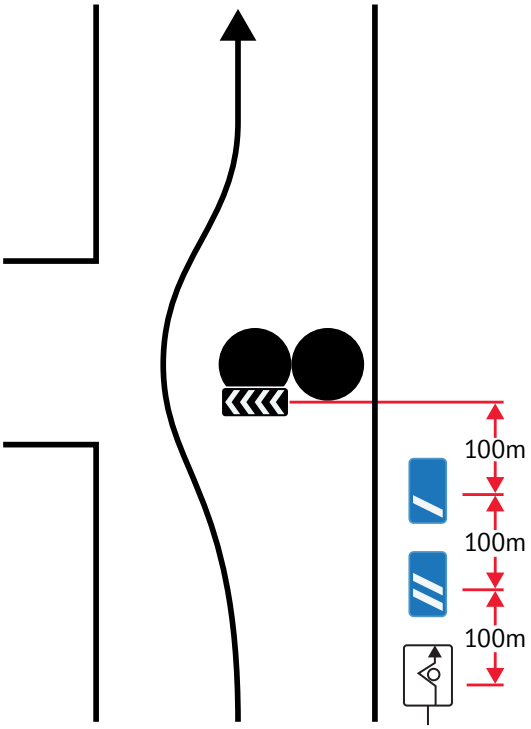

Drawing 5

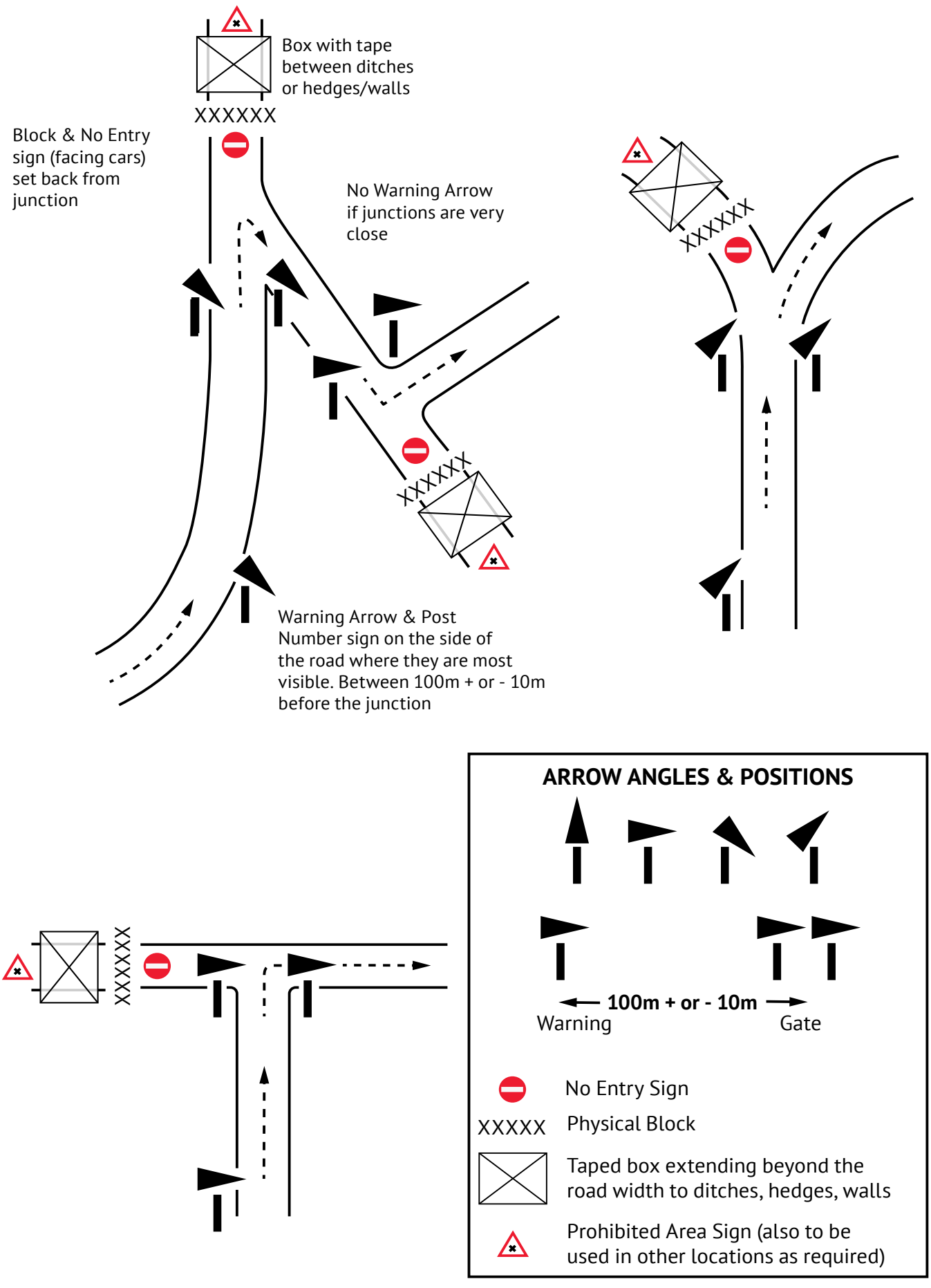
Box with tape between ditches or hedges/walls
XXXXXX
Block & No Entry sign (facing cars) set back from junction
No Warning Arrow if junctions are very close
XXXXXX
XXXXXX
Warning Arrow & Post Number sign on the side of the road where they are most visible. Between 100m + or - 10m before the junction
XXXXXX
ARROW ANGLES & POSITIONS
100m + or - 10m
Warning
Gate
No Entry Sign
XXXXX
Physical Block
Taped box extending beyond the road width to ditches, hedges, walls
Prohibited Area Sign (also to be used in other locations as required)

Drawing 6 (Alternative to Drawing 5 without the use of box junctions)

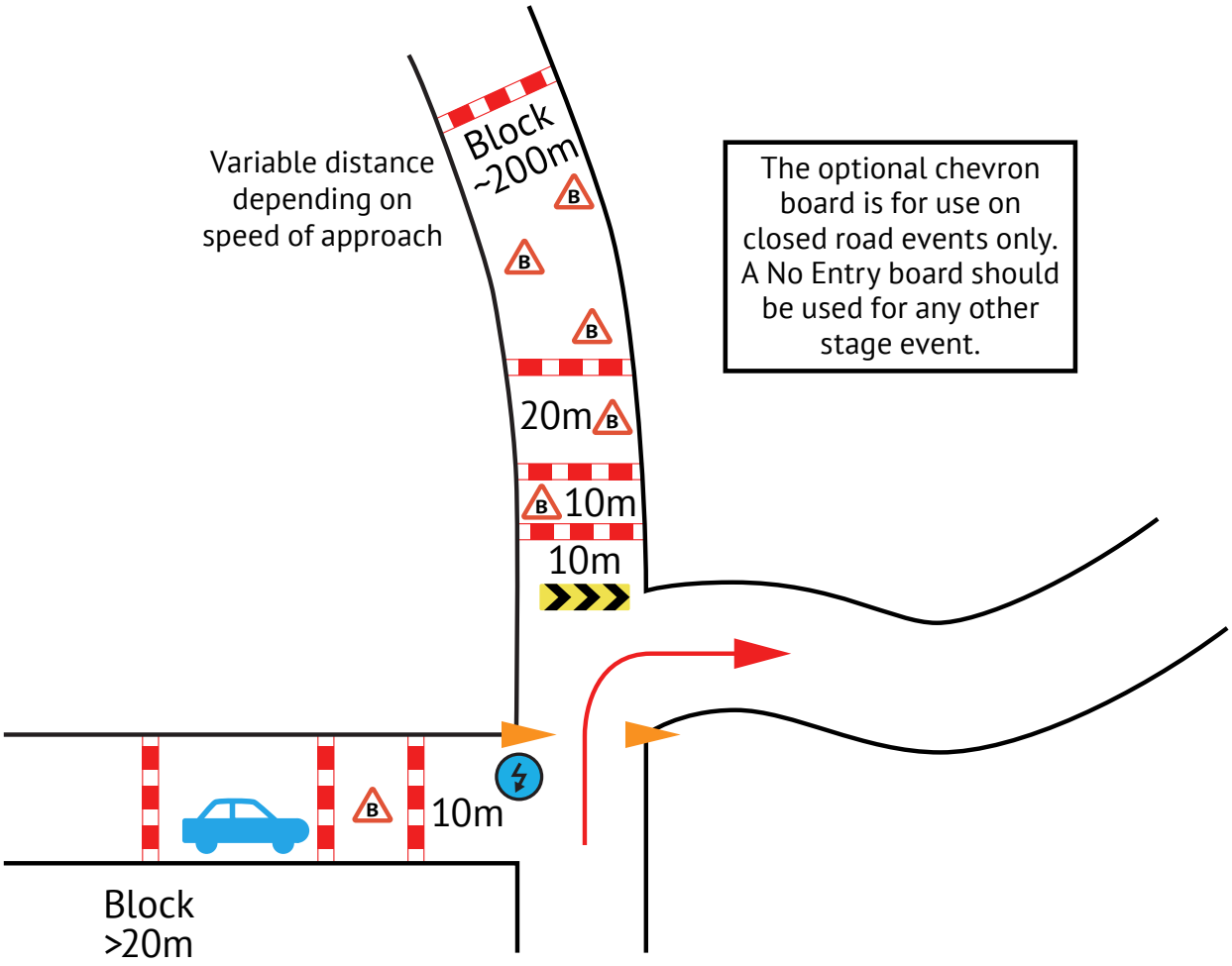

Drawing 7

Beginning of Control Area (Stage Arrival)	Yellow background	
At Stage Arrival Control	Red background	
At Stage Start	Red background	
Warning of Stage Finish (Both sides of track 100m prior to Flying Finish Line)	Yellow background	
At Flying Finish Line (Both sides of track)	Red background	
Countdown Boards (Evenly spaced between flying finish and stop line)		
At the Stop Line	Red background	

Drawing 8

Approximately 100m before Radio Point	Yellow background	
At Radio Point	Blue background	

CHAPTER 13 RALLY

Appendix 24 - Class Requirements

1. Stage Rally Class Structures

1.1. All **Stage Rallies** must use the **Class** structure detailed in **Chart 50**. Events may choose to utilise all, or some, or amalgamate the **Classes** but must not deviate from the list.

1.2. Where reference is made to forced induction, the relevant coefficient is already included.

Chart 50

Class	Description
1	Homologated (and formerly homologated) FIA Rally 2 and R5 cars and any variants*. FIA S2000 specification cars and any variants.(including all turbo conversions) All World Rally cars (must comply with their homologation)* *Variants of Rally2/R5 specification cars permitted only until 31st December 2025. Rally2/R5 cars whose FIA homologation is expired shall continue to run in this class and be in conformity with their relevant homologation papers (including weight). RHD conversions which retain all other aspects of the homologation (including weight) will remain valid beyond 1st January 2026. ** Exceptionally, Motorsport UK may grant a dispensation to use non-homologated parts to replace homologated components which are no longer available. Details on request from Motorsport UK Technical Department*
2	*All 4-wheel drive cars over 2000cc not eligible for Class 1 & 4*.* **Currently homologated, and formerly homologated cars eligible for Class 1 – and any variants or modified versions of these cars – are not permitted to enter Class 2 on any event run under a Motorsport UK permit.*
3	2-wheel drive cars with normally aspirated engines over 2000cc or forced induction engines over 1500cc. Homologated (and formerly homologated) FIA RGT cars
4	Homologated FIA Rally 3 cars and Group N4 that still comply with their homologation
5	Homologated FIA Rally 4 and R2 cars with forced induction that still comply with their homologation
6	Cars with normally aspirated engines over 1600cc up to and including 2000cc or forced induction engines up to and including 1500cc
7	Homologated FIA Rally 5 and Rally 5-Kit cars
8	Cars with normally aspirated engines over 1400cc up to and including 1600cc, including R2, or forced induction engines up to and including 1000cc
9	Cars with normally aspirated engines up to and including 1400cc
10	Rally Start: Cars over 1600cc that meet the current technical specification of Rally First (as published on Motorsport UK website) plus Road Rally cars as per **Ch.13 App.15 Art.1**
11	Rally Start: Cars over 1400cc up to and including 1600cc that meet the current technical specification of Rally First (as published on Motorsport UK website) plus Road Rally cars as per **Ch.13 App.15 Art.1**
12	Rally Start: Cars over 1000cc up to and including 1400cc that meet the current technical specification of Rally First (as published on Motorsport UK website) plus Road Rally cars as per **Ch.13 App.15 Art.1**
13	Rally Start: Cars up to and including 1000cc that meet the current technical specification of Formula 1000 (as published on **ASN** website)
14	Junior 1000: Cars up to and including 1000cc that meet the current technical specification of Junior 1000 (as published on **ASN** website)
15	Hybrid Electric & full Electric cars of all types
16	• Land Rover Wolf FIA Homologated Cross Country specification vehicles by OEM. By prior approval only* • Cross Car (permitted for Single Venue Stage Rallies and Rally Time Trial only) Vehicles as per all current technical regulations (as published on Motorsport UK website) **Approval to be sought from rally@motorsportuk.org & technical@motorsportuk.org*
H1 (a)	Historic Category 1 Rally Cars including Appendix K. Up to 31.12.67. Up to 1600cc not including Twin Cam engine cars *This class is to be automatically amalgamated with H1 when less than 5 entries are received.*

H1	Historic Category 1 Rally Cars including Appendix K. Up to 31.12.67. All remaining cars over 1601cc including Twin Cam engine cars
H2	Historic Category 2 Rally Cars including Appendix K. 1.1.68 – 31.12.74. Up to 1600cc
H3	Historic Category 2 Rally Cars including Appendix K. 1.1.68 – 31.12.74. 1601cc to 2000cc
H4	Historic Category 2 Rally Cars including Appendix K. 1.1.68 – 31.12.74. Over 2001cc
H5	Historic Category 3 Rally Cars including Appendix K. 1.1.75 – 31.12.81. Up to 1600cc
H6	Historic Category 3 Rally Cars including Appendix K. 1.1.75 – 31.12.81. 1601cc to 2000cc with the exception of those qualifying for Class H8.
H7	Historic Category 3 Rally Cars including Appendix K. 1.1.75 – 31.12.81. Over 2001cc
H8	Historic Category 3 Rally Cars including Appendix K. All cars having engines with both more than one camshaft and more than two valves per cylinder. All cars with a Rotary Engine
H9	Historic Category 4 Rally Cars including Appendix K. 1.1.82 – 31.12.90. Up to 1300cc
H10	Historic Category 4 Rally Cars including Appendix K. 1.1.82 – 31.12.90. 1301cc to 1600cc
H11	Historic Category 4 Rally Cars including Appendix K. 1.1.82 – 31.12.90. 1601cc to 2000cc
H12	Historic Category 4 Rally Cars including Appendix K. 1.1.82 – 31.12.90. Over 2001cc
H13	Historic Rally Cars complying with FIA Appendix K not able to comply with Motorsport UK Tyre & Wheel Regulations
H14	Historic Category 5 Rally Cars including Appendix K. 1.1.91 – 31.12.99. Up to 1600cc
H15	Historic Category 5 Rally Cars including Appendix K. 1.1.91 – 31.12.99. 1601cc to 2000cc including ‘Formula 2’ Kit Cars (including all Evolution and Maxi variants) that still comply with their homologation
H16	Historic Category 5 Rally Cars including Appendix K. 1.1.91 – 31.12.99. Over 2001cc (All period homologated Group A and Group N 4wd cars, not including formerly homologated World Rally Cars)

SUGGESTED AMALGAMATIONS (Lowest class number takes precedence when outlining Classes)

Classes 1, 2 & 4
Classes 5, 6 & 7
Classes 8 & 9
Classes 10, 11, 12 & 13
Classes 3, 14, 15 and 16 are **not to be amalgamated if used**

Classes H1 (a) & H1
Classes H2, H3 & H4
Classes H5, H6 & H7
Classes H9, H10, H11
Classes H14, H15 & H16

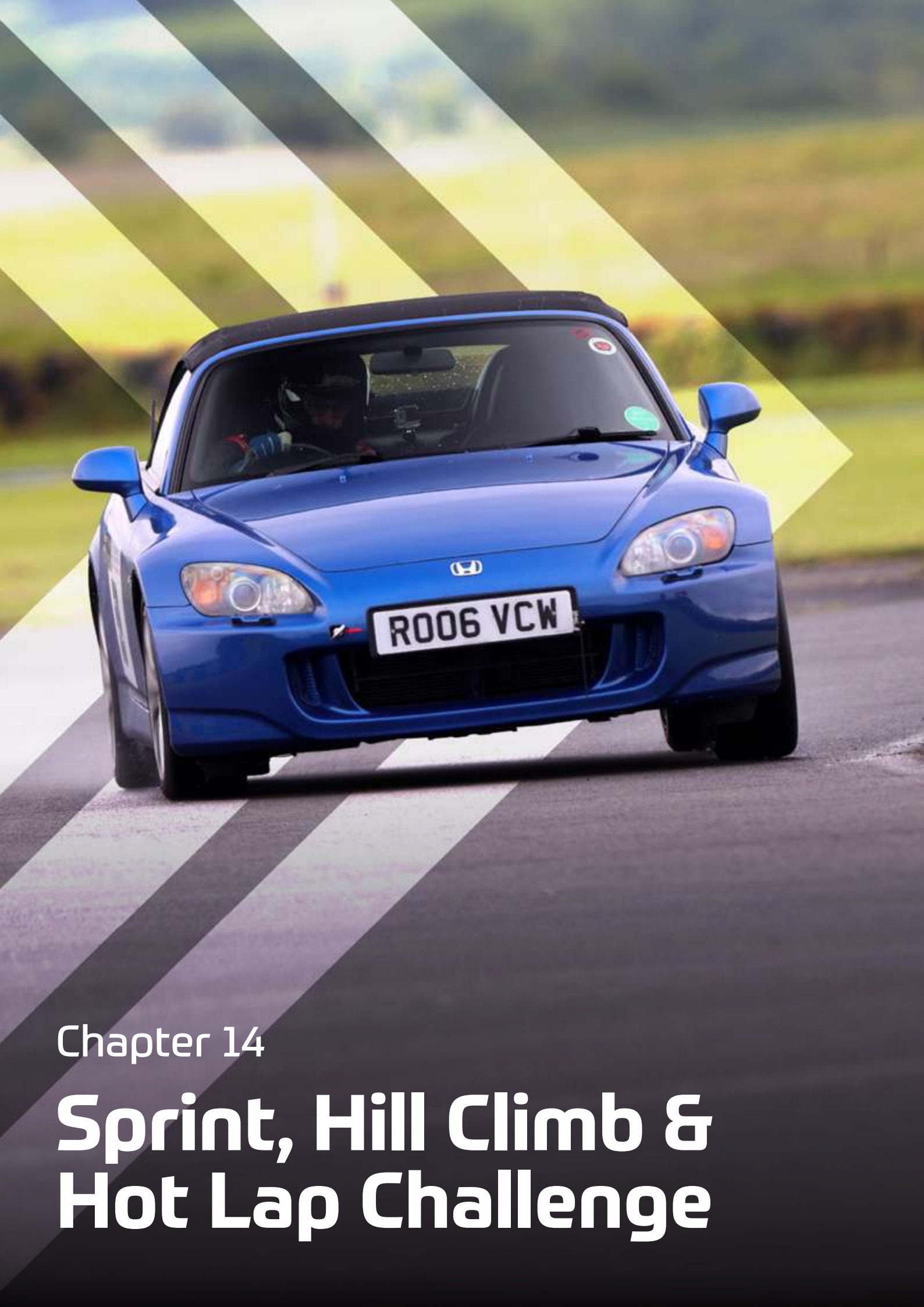

Chapter 14

Sprint, Hill Climb & Hot Lap Challenge

CHAPTER 14 SPRINT, HILL CLIMB AND HOT LAP CHALLENGE

This Chapter must be read in conjunction with Chapters 1-11 as appropriate.
This Chapter is separated into the following appendices:

- App. 1 **Organisers Regulations** including **Scrutineering**
- App. 2 **Technical Regulations**
- App. 3 **Paddock and Track Regulations**
- App. 4 **Technical Regulations** – all **Categories**
- App. 5 Specific Regulations for **Hot Lap Challenge**

CHAPTER 14 SPRINT, HILL CLIMB AND HOT LAP CHALLENGE

Appendix 1 - Organisers Regulations Including Scrutineering

1. General

1.1. **Permits** for **Sprints, Hill Climbs** or **Hot Lap Challenge** are issued at the sole discretion of the **ASN** and are dependent upon a valid **Track Licence** being in existence.

1.2. For **Hot Lap Challenge** a valid **Track Licence** for a **Racing Circuit** is required.

1.3. A **Club** will only be allowed to organise **Events** up to **National** status unless the **ASN** has specifically approved an application for higher status.

1.4. **Organisers** must appoint only **ASN** licensed **Clerks of the Course, Timekeepers** and **Scrutineers** appropriate to the grade of the **Event.**

1.5. All **Drivers** must hold the correct category of **Licence.**

1.6. If the **Entrant** is not the **Driver** then the **Entrant** must hold an **Entrant's Licence**.

1.7. Whenever possible, there shall be at least two **Timekeepers** at all **Speed Events** (Ch.5 Part A App.7).

1.8. For **Hill Climbs** and **Sprints**, timing is only permitted up to an accuracy of 0.1 or 0.01 seconds.

1.9. If a **Championship** round is cancelled or changes its date due to reasons of safety or force majeure the **Championship Organiser** may arrange for an alternative **Event** or date for an **Event** to be included in their **Championship** calendar. Subject to Ch.1 Art.1.4 only two such changes will be permitted during the duration of that particular **Championship** and the proposed amendment must be subject to **ASN** approval and will only be permitted if all registered **Competitors** have been advised and less than 15% (rounded up to the next whole number) of the **Competitors** registered for the **Championship** object to the change in writing. **Competitors** failing to respond within 4 weeks (28 days) from the date of the **Organiser's** written proposal to change being sent will be considered to agree to the change.

2. Medical and Rescue Requirements

2.1. The minimum medical and rescue requirements (including **Practice**) are:

a. **For Sprint and Hill Climb:** One **ASN Licensed Doctor** (or one **ASN-Registered Paramedic** and one **Rescue Unit**).

b. **For Sprint and Hill Climb:** Subject to the presence of a correctly crewed and equipped **ASN** registered **Rescue Unit**, the attendance of an ambulance is recommended but not mandatory. This is subject to the requirement that if a casualty is within the **Rescue Unit** the **Event** may not run until the casualty has been released for further care.

c. The **Rescue Unit** and the ambulance must be positioned to ensure unobstructed access to the **Course** as per the **Track Licence.**

d. **Hot Lap Challenge:**

i. At all permanent **Circuits** there shall be a medical centre equipped in accordance with the current **ASN Medical Centre Protocol.**

ii. The appropriate number of **Doctors, ASN Registered Paramedics** and ambulances must be present throughout **Practice** and **Racing** and positioned where necessary in accordance with the **Track Licence.**

iii. Provided that the basic minimum of one **Doctor** is complied with the remaining posts shall be filled with either **ASN Registered Paramedics (Ch.11)** or **Doctors** appointed to the **Event** at the sole discretion of the **Chief Medical Officer** of the **Event.**

iv. At least one **Licensed Rescue Vehicle** and crew should be in attendance and positioned as

indicated on the **Track Licence.**

2.2. **Organisers** in conjunction with the **Chief Medical Officer** of the **Event** must ensure that during **Practice** sessions and **Competition** the following are in attendance:

a. Adequate number of trained first-aid staff (e.g. members of St. John Ambulance Association, British Red Cross Society or St. Andrew Ambulance Association).

b. Ambulances should be equipped with basic resuscitation equipment and if possible a Casualty Immobiliser for handling a patient over difficult terrain and shall be reserved for use in connection with casualties arising from the **Competition.**

c. The ambulance must be so equipped that essential equipment does not have to be taken from any other **Emergency Vehicle**

2.3. In an emergency, the **Chief Medical Officer** may, at their discretion, designate as an ambulance any vehicle they deem adequate for this purpose.

2.4. When public attendance is expected suitable arrangements must be made by the **Organisers** for dealing with the first-aid requirements of spectators not arising from the event.

3. The Clerk of the Course

For **Licence** Criteria see **Ch.5.**

3.1. In the case of all **Sprints, Hill Climbs** or **Hot Lap Challenge** the **Clerk of the Course** must hold a **Clerk of the Course** licence issued by the **ASN** valid for the grade of **Event.**

3.2. At all **National** and above **Events** there should be at least one **Licensed Deputy / Assistant Clerk of the Course** in addition to the **Clerk of the Course.**

3.3. At all other **Events** it is recommended that there be at least one **Deputy / Assistant Clerk of the Course** in addition to the **Clerk of the Course**. **Deputy Clerks** must be licensed but **Assistant Clerks** need not be.

4. Scrutineering

4.1. No **Vehicle** may be driven in the **Event** until it has been approved by a **ASN Scrutineer of the Event.**

4.2. All **Vehicles** competing in **Hill Climbs** or **Sprints** must be presented for scrutineering with a valid **Competition Car Log Book / Vehicle Passport** or an **ASN Recognised Vehicle Identity Document** unless the **Vehicle** is currently licensed for use on the **Public Highway** and is competing in a road legal condition. The onus of proof rests with the Competitor. See **App.4 Technical Regulations**.

4.2.1. Any alteration or modification made to the Vehicle or any amendment to the original details shown in the Competition **Car Log Book / Vehicle Passport** must be in accordance with the prescriptions of **Ch.7 App.1**.

4.3. If after approval any **Vehicle** is dismantled or modified in a manner that may affect its safety or eligibility or it is involved in any incident which is likely to have a similar effect or any aerodynamic device is added or removed it shall be represented for approval. The **Entrant** shall be responsible for seeking such fresh approval.

4.4. Any **Vehicle** involved in an incident which is unable to proceed shall not be touched by any person other than **Officials** without the specific approval of the **Clerk of the Course.** The **Driver** concerned may not drive again without the approval of the **Medical Officer** in charge.

4.5. Any **Vehicle** involved in an accident shall not be taken away from the **Course** without the prior authority of the **Clerk of the Course.**

4.6. A **Vehicle** involved in a **Serious Incident** shall only be touched with the authority of the **ASN Safety Department** except for the purposes of the extraction of the **Driver** under medical supervision.

4.7. The **Official Documents** for all **Hill Climbs** and **Sprints** should specify if timing is being activated by a light beam. In this case **Competitors** must be reminded that a timing strut in accordance with the **Technical**

Regulations App.4 Art.11.1 is required.

5. Practice/Competition Restrictions

5.1. Must be stated in the **Official Documents.**

5.2. **Practice:** With the exception of **Hot Lap Challenge** all **Competitors** must receive the following opportunities for practice:

a. Before the competitive runs at least one practice run.

b. **Drivers** must be permitted to either:

i. Walk the **Course** or

ii. Drive over it at a non-competitive speed.

5.3. The **Official Documents** must state which Art.5.2.b. option is to be adopted.

5.4. Any **Driver** who has not previously competed at the **Course** in its current configuration within the preceding 24 months must make at least one **Practice** run in the **Vehicle** to be competed in. The **Clerk of the Course** may waive this requirement where a **Driver** can give satisfactory evidence of familiarity with the **Course** and the **Vehicle Entered** to compete but in which the **Driver** has not **Practiced**.

5.5. Where **Practice** times are not required for the purpose of arranging the order of competing then such times will be unofficial. Failure to record a time in such a case for whatever reason will not automatically qualify the **Driver** concerned to a re-run but this may be authorised by the **Clerk of the Course**

6. Starting

6.1. The **Official Documents** must specify:

a. The starting signal

b. The method of timing

c. When timing commences.

6.2. Except for **Hot Lap Challenge** all **Vehicles** shall be started from a standing start with the engine running. Unless the **Track Licence** allows more than one **Vehicle** to be on the **Course** at the same time no **Vehicle** shall be started whilst there is an obstruction in its path either on the **Course** or in the braking area after the finish.

6.3. **Vehicles** starting singly or in line abreast shall be placed as follows:

a. When start timing is activated by a light beam the **Vehicle** must be stationary with the part which operates the timing apparatus 100mm behind the starting line.

b. If the timing is not recorded automatically then with that part of the front tyres which is in contact with the ground resting upon the **Start Line.**

c. Alternatively **Organisers** may substitute "400mm" as an alternative to the "100mm" shown in a. above. In such instances +/- 20mm will be the permitted tolerance for this alignment.

6.4. The **Finish Line** will be clearly indicated and must be notified in the **Official Documents.**

7. Signals

7.1. **Signals** will normally be restricted to a **Red Signal** at each **Post**. **Marshals** should be briefed as to halting a **Driver** in the **Event** of an incident as follows:

a. **In Hill Climbs**: If the **Red Signal** is displayed competing **Vehicles** should come to a standstill as soon as practicable and await further instructions from the **Marshals.**

b. **In Sprints**: If the **Red Signal** is displayed competing **Vehicles** should come to a standstill as soon as practicable and await further instructions from the **Marshal** unless the **Official Documents** specify

that the following alternative is applicable to the **Event:**

i. If the **Red Signal** is displayed then the **Driver** must immediately cease driving at competitive speed and proceed slowly to the **Pits / Paddock / Start Line** as directed by **Marshals** and at all times be prepared to stop and must stop if the **Track** is blocked.

7.2. In **Sprints** at **Race Circuits** other **Signals** may be used provided their use is clearly defined in the **Official Documents.**

CHAPTER 14 SPRINT, HILL CLIMB AND HOT LAP CHALLENGE

Appendix 2 - Competitors Regulations

1. General

1.1. These **Competitor Regulations** must be read in conjunction with **Ch.2 (Judicial), Ch.6 (Competitor Licensing), Ch.7 (Competitor Vehicles and Vehicle Safety Equipment, Ch.8 (Permitted Fuels and Tyres and Testing), Ch.9 (Competitor Personal Safety Equipment)**

1.2. **Competitors** in all **Sprints, Hill Climbs** or **Hot Lap Challenge** must comply with the Common Regulations for **Competitors** (**Ch.6)** and the following:

a. **Vehicles** must be presented for scrutiny and practice at the times specified in the **Official Documents**.

b. **Vehicles** competing in **Hill Climbs** and **Sprints** must comply with **Technical Regulations** of **App.4 to this Chapter** and **Ch.7**.

1.3. A valid **Competition / Entrant Licence** for **Entrant** and **Driver** must be produced to the **Organisers** on demand for the purposes of signing on to an **Event.**

1.4. Any **Driver** competing in a Racing or Sports Libre car of more than 1100cc or equivalent forced induction with the exception of a pre'1994 Formula Ford 1600 in compliance with the period Ford regulations must hold an **RS National** or **Race National Licence** unless the **Vehicle** is currently licensed for use on the **Public Highway** and competes in the **Event** in a road- legal condition.

1.5. **Competitors** must declare on their **Entry** forms whether or not they have ever held a valid RTA licence.

1.6. **Competitors** who have never held a valid RTA licence and who do not have any qualifying signatures towards upgrading their **Competition Licence** on their **Upgrade Card** may be specifically observed at the **Event.**

1.7. Any **Driver** whose vehicle is not capable of self-starting at any part of the **Course** must declare on their **Entry** form the method of operation together with a detailed starting instruction.

1.8. **Drivers** in **Hot Lap Challenge** must comply with the minimum licence criteria stipulated in **App. 5 to this Chapter.**

1.9. **Junior Sprint** and **Junior Hill Climb Drivers** aged 14 to 16 may compete until the end of the year of their 16th birthday at Interclub status in vehicles of the following types which will be classified separately from each other:

a. A Standard Car of no more than 110bhp maximum power output and in compliance with the **Technical Regulations** for **Standard Cars** (**App. 4 to this Chapter**).

b. A vehicle in compliance with **Ch.16 PART B App.10 Art.13.1** (Junior Rallycross), **Ch.16 PART A App.5 Art.28.1** (Junior Autocross), **Ch.12 App.1** (Junior Car Racing) or **Ch.13 App.21** (Junior Rally). Tyres must be to **Ch.8 List 1A, List 1B** or as specified in the regulations of a current **Junior Car Racing Championship**. Any **Competitor** entering a vehicle in compliance with **Ch.12 App.1** or **Ch.13 App.21** will be required to present their junior formulae licence.

1.10. **Junior Sprint:** New **Drivers** will be required to drive observed runs prior to the **Competition** and satisfy the **Clerk of the Course** that they are competent to take part subject to the following:

a. Start singly and run over the duration of the **Course** at least 3 times. This may be reduced by one run for each of the following cases i-iii where evidence is provided to the satisfaction of the Clerk of the Course:

i. Previous competition at the same venue in the same vehicle.

ii. Walking the course within the previous 24 hours or course inspection with an Official.

iii. Driving experience in other **ASN** disciplines deemed appropriate by the Clerk of the Course.

b. An **ASN** Licensed **Driver** may accompany the new **Driver** subject to written approval of the **Clerk of the Course.**

c. Observed laps are not required if the **Driver** can provide the **Clerk of the Course** with proof of having competed as a Driver in three other **ASN Permitted Events.**

1.11. **Junior Hill Climb:** For participation in **Junior Hill Climb Events** the **Driver** must have gained signatures for having successfully completed a minimum of three **Junior Sprint Events.**

1.12. **Organisers** may provide an **Intro-Class** which will allow new **Drivers** to experience competitive motor sport on an **Event-by-Event** basis with the exception of **Juniors** (**Arts 1.9-1.11 above**) when:

a. The RS Clubman licence is acceptable

b. The Class will run separate to any other session

c. The Vehicle must run on **Ch.8 App.4 List 1A** tyres

d. Vehicles must be in compliance with the Technical Regulations for Standard Cars (**App.4 to this Chapter**).

2. Competition Licence Retention and Upgrading

2.1. See **Ch.6**.

3. Competition Numbers

3.1. **Vehicles** will be identified by means of a **Competition Number** allocated by the **Organisers** which must be visible from each side of the **Vehicle** and displayed on a contrasting background in a proper and durable manner acceptable to the **Chief Timekeeper** at the **Event.**

3.2. **Competition Numbers** must be covered or removed at all times whilst driving on the **Public Highway.**

4. Drivers

4.1. Throughout **Practice** and **Competition** upon exiting from and until returning to the **Paddock** when the **Driver** is seated in the **Vehicle** they must wear clothing helmet and visors or goggles complying with **Ch.9 Art.3-11**.

4.2. Overalls homologated to FIA 8856- 2000 FIA 8856- 2018 or FIA 1986 standard are mandatory with the exception of **Standard Cars** (see **App.4 Art.13–16** where flame-resistant clothing is recommended (arms and legs must be covered) and Road Cars (see **App.4 Art.17–23** where overalls must comply with **Ch.9 Arts.3.3.f.**

4.3. Competitors are required to wear flame-resistant gloves (see **Ch.9 Art.12.6**) with the exception of Standard Cars and Road Cars where their use is recommended. The use of a flame-resistant balaclava (**Ch.9 Art.12.3**) is mandatory with the exception of open bodywork Period Defined Vehicles (Non-Rally) A-D, Standard Cars and Road Cars where their use is recommended. For all categories the wearing of flame-resistant socks (**Ch.9 Art.12.4**) and underwear (**Ch.9 Art.12.2**) is strongly recommended.

4.4. An **FIA** approved FHR device fitted in accordance with **FIA** regulations is mandatory for all **Drivers** with the exception of **Period Defined Vehicles** and **Standard Cars** and **Road Cars.**

4.5. All required items must be produced for inspection and approval at scrutineering.

4.6. Only the **Driver** may be in a **Vehicle** during the **Competition** or **Practice** with the exception of **App.2 Art.1.10.b.**

4.7. **Official Documents** shall state if during warm-up of a **Hot Lap Challenge Event** the team data analyst is authorised to the accompany the **Driver.** That data analyst will then be required to comply with **Art.5.1 below.**

5. Results

(Not applicable for **Hot Lap Challenge)**

5.1. A **Driver** may drive any number of **Vehicles** for which an **Entry** has been accepted by the **Organisers** unless **the Official Documents** specify a limit.

5.2. The same **Vehicle** may not be entered to compete for the same award more than twice and then only provided it is driven by different **Drivers.**

CHAPTER 14 SPRINT, HILL CLIMB AND HOT LAP CHALLENGE

Appendix 3 - Paddock and Track Regulations

1. General

1.1. The spinning of wheels (tyre warming) will only be permitted in a designated area and which should be clearly defined by the **Organisers.**

1.2. The heating of tyres by any method other than at **Art.1.1 above** or the treatment of tyres by any chemical substance is prohibited. For the avoidance of doubt no manner of abnormally raising the temperature of the tyres/wheels above the natural ambient temperature is allowed. The use of heat guns to clean and prepare slick tyres between runs is permitted.

1.3. Single-use plastic tyre wrapping is prohibited.

1.4. Any **Vehicle** unable to complete the **Course** shall be stopped well clear of the **Track** and shall not be moved without prior permission from the **Clerk of the Course.**

1.5. No competing **Vehicle** shall be driven in the reverse direction of the **Track** except under the supervision of **Officials.**

1.6. Refuelling and work on the **Vehicles** other than by a **Driver** or **Officials** can only be carried out in the paddock unless the **Clerk of the Course** specifically authorises otherwise**.**

1.7. No more than two people at any time in addition to the **Driver** and **Officials** are allowed in attendance on each **Vehicle** in the identified starting area.

1.8. Except while on the **Track** no competing **Vehicle** shall be driven at a speed exceeding 10 mph without the specific permission of the **Clerk of the Course.**

1.9. In **Hill Climbs** If the Red Signal is displayed competing cars should come to a standstill as soon as practicable and await further instructions from the marshals.

1.10. **In Sprints** if the Red Signal is displayed competing cars should come to a standstill as soon as practicable and await further instructions from the marshals unless the **Official Documents** specify that the following alternative is applicable to the Event:

a. If the **Red Signal** is displayed then the **Driver** must immediately cease driving at competitive speed and proceed slowly to the **Pit / Paddock / Start Line** as directed by **Marshals** and at all times be prepared to stop if the **Track** is blocked.

1.11. **Vehicles** must not be left unattended under any circumstances when the engine is running. In the event that a responsible person is not seated in the driving position they must be in close proximity and the **Vehicle** must be under their supervision at all times.

2. Starting and Practising

2.1. **Vehicles** will start as specified.

2.2. **Sprints** and **Hill Climbs**: Singly.

2.3. The starting order will be in classes as determined by the **Organisers** unless the **Official Documents** specify otherwise.

2.4. The number of **Vehicles** on a **Track** at any one time is that permitted by the **Track Licence** with the exception of **Junior Sprint** or **Hill Climb Competitors** who must be on the **Track** singly at any time.

2.5. In **Hill Climbs** or **Sprints** on sealed surfaces should a **Driver** make an unsatisfactory start then provided that neither of the rear wheel centres have crossed the **Start Line** a Re-Start may be permitted.

2.6. **Drivers** will be under **Starter's Orders** when instructed by an Official to proceed to the Start Line. If a **Driver** takes undue time to comply then the **Clerk of the Course** or a **Deputy** may specify that the **Driver** must come forward within two minutes or forfeit the run.

2.7. After crossing the **Finish Line Drivers** must slow down as appropriate and proceed as instructed.

3. Results

3.1. Unless the **Official Documents** say otherwise **Drivers** must be allowed a minimum of two runs in the same **Vehicle** in each **Class** entered with the faster run to count for the **Results.**

3.2. As between two **Drivers** the more meritorious performance will be that of the **Driver** who has covered the **Course** in a lesser time.

3.3. A **Driver's** time will be credited only if:

a. All four wheels of the **Vehicle** are on the **Track** when it crosses the **Finish Line**.

b. The run is made during the period provided for **Vehicles** in the appropriate class and not more than the appropriate number of competition runs have been made.

c. The **Vehicle** completes the correct **Course** without outside assistance.

3.4. If the boundaries of the **Track** are indicated by temporary markers the **Official Documents** shall specify if any and what penalties apply for striking a marker or crossing a given line.

3.5. To be classified as a finisher in the **Competition** a **Driver** must have completed at least one **Competition** run.

3.6. Only an equal number of runs for all **Drivers** in the same **Class** will be counted. In the Event of a tie between two or more **Drivers** the results of the next fastest run recorded (during competition runs) by the **Drivers** concerned shall be compared and so on.

3.7. If through their own error a **Driver** fails to record a time they shall not be entitled to a re-run.

3.8. In other circumstances (e.g baulking) a re-run may be granted by the **Clerk of the Course** who may order any penalties incurred in the initial run are applied to the re-run.

3.9. **Judges** may be appointed to adjudicate on:

a. Unsatisfactory or **False Starts.**

b. Not following correct **Course** or touching marker.

c. Baulking.

d. Noise.

CHAPTER 14 SPRINT, HILL CLIMB AND HOT LAP CHALLENGE

Appendix 4 - Technical Regulations

These Technical Regulations must be read in conjunction with Ch.7 **(Competitors Vehicles and Vehicle Safety Equipment)**

1. Categories

1.1. Categories are defined in the following regulations (except for **Period Defined Vehicles (Non-Rally**) A-E inclusive which remain free). **Classes** within those categories are free but must be stated in the **Official Documents**.

1.2. Other than the provisions of Ch.7 and Art.2 below and the specific **Category** regulations below as appropriate modifications are free.

1.3. **ASN** retains the sole discretion to determine the category into which a vehicle should be categorised should there be any doubt.

1.4. The onus of responsibility for the eligibility of competing **Vehicles** lies with the **Competitor.**

1.5. **Standard Cars** – **Vehicles** complying with. App.4 Art.13

1.6. **Road Cars** – **Vehicles** complying with App.4 Art.14

1.7. **Modified Cars** – **Vehicles** complying with App.4 Art.15

1.8. **Sports Libre Cars** – **Vehicles** complying with App.4 Art.16

1.9. **Racing Cars** – **Vehicles** complying with App.4 Art.17

1.10. In addition to complying with Ch.7 all **Vehicles** competing in **Sprints** and **Hill Climbs** must comply with the following as a minimum:

2. Safety (Hill Climbs and Sprints)

2.1. Be fitted with a **Roll Over Protection System** complying with **ASN** requirements as specified in Ch.7 except for cars of Periods A – E (see Ch.1 App.1) and **Standard Cars** and **Road Cars Series Production** as defined in these **Regulations** where it is recommended.

2.2. If fitted with lightened non-standard doors then must be fitted with a doorbar(s) complying with Ch.7 App.3 Art.12 on the **Driver's** side as a minimum.

2.3. Open and closed wheel **Racing Cars** and **Sports Libre Racing Cars** as defined in App.4 Art.16.1.a must comply with Ch.7 App.3 Art.24.

2.4. Seating and Seat Belts except for cars of Periods A – E (Ch.1 App.1) must be worn and be correctly adjusted at all times during **Events.**

2.5. **Road Cars**: front seats may be replaced by fully trimmed **Competition** versions.

2.6. **Standard Cars** and **Road Cars** must have a minimum Three Point Harness System (Ch.7 App.7 Art.6) with the exception of **Junior Sprint** and **Junior Hill Climb Competitors** who must have as a minimum a Four Point Harness (Ch.7 App. 7 Art.7).

2.7. **Modified Cars** must have as a minimum a Four Point Harness (Ch.7 App. 7 Art.7**).**

2.8. Sports Libre Cars and Racing Cars must be equipped with a homologated FIA safety harness minimum Five Point Harness **(**Ch.7 App. 7 Art.8**).**

2.9. Head restraints (Ch.7 App. 7 Art.4 are mandatory for all **Vehicles** except for **Vehicle** of Periods A – E.

2.10. Fire Extinguishers – per Ch.7 App.6 recommended for discharge into cockpit and engine compartment in all **Vehicles.**

2.11. Towing point(s) of adequate strength and size are mandatory. They must be clearly identified and suitably marked on the **Vehicle** using a high visibility colour and be accessible to the front and rear of the **Vehicle.**

3. Windscreen/Glass

3.1. Windscreens are mandatory for all closed **Vehicles.** They are free for open V**ehicles.**

3.2. Laminated windscreens lamp glass security and rear-view mirrors are not required unless specified in **Official Documents** or where there is a possibility of one car overtaking another**.**

3.3. Windscreen wipers must be operative on all **Vehicles** with windscreens.

4. Engines

4.1. Forced induction equivalence: 1.4 with the exception of **Standard Road Cars** (Art.13) where forced induction equivalence is 1.7.

4.2. Rotary engine equivalence: 1.5. Forced induction rotary equivalence (1.4 x 1.5) = 2.1 or (1.7 x 1.5) = 2.55.

4.3. All engines must be provided with a means of starting which does not involve push starting or the use of external equipment or personnel except in the case of force majeure unless period defined or vehicles in possession of a **Competition Car Log Book** or **Vehicle Passport** prior to 31st December 2018.

4.4. Any connections to assist the starting of the car must be either in the **Drivers'** cockpit or at the tail of the car requiring horizontal connection.

4.5. Undertrays: Must be provided with drainage holes to prevent accumulation of liquids.

4.6. Engine Oil Systems: Unless equipped with a closed loop system must have a catch tank of at least a one litre capacity to be incorporated in the oil breather system.

5. Wheels and tyres

5.1. Except those of centre-lock type must have any nuts securing road wheels of steel and in thread contact over a minimum length of 1.5 bolt / stud diameters. Extended or composite wheel bolts / studs are prohibited.

6. Fuel

6.1. For Standard Cars, Road Cars and Modified Cars: **Permitted Fuel** is mandatory. Only air may be mixed with the fuel as an oxidant.

6.2. Sports Libre and Racing Cars: Only **Permitted Fuel** or methanol may be used. When using methanol the addition of 10% by volume of Propanone is allowable.

a. Any **Vehicle** using methanol must include an approved additive which provides a distinguishable colour and smell when burning. The maximum permitted volume of additive within the fuel is 0.2%. The **Vehicle** must carry a Day Glo orange disc 70mm in diameter positioned adjacent to all **Competition Numbers.**

6.3. Alternative fuels may be permitted subject to prior **ASN** approval.

6.4. All **Vehicles** must be equipped with an effective method of stopping the fuel supply operable by the Driver when normally seated and with seat belt / harness secured with the exception of **Standard Cars** as defined in **Art.13.1 below** where it is recommend this is to be combined with or located adjacent to the internal ignition cut-off switch.

7. Electric Vehicles

7.1. Electrically powered vehicles are permitted subject to conformity with **Ch.7 App.11** and any **Official Documents** (see **Ch.3 App.10**).

8. Electrical

8.1. All **Vehicles** must be equipped with an ignition cut-off switch having positive 'ON/OFF' positions clearly marked. The ignition cut-off and fuel pumps isolation system(s) must be operable by the **Driver** when normally seated with seat belts / harness secured except **Standard Cars** as defined in these **Regulations** where it is recommended.

8.2. Lighting equipment is not required unless the **Vehicle** is currently licensed for use on the **Public Highway** and competed on the **Event** in a road legal condition (**Art.12 below**).

8.3. An external circuit breaker to **Ch.7 App.5 Arts.5** is mandatory for all **Vehicles** except open cars of periods A – E and **Vehicles** in a road legal condition (**Art.12 below**) when it is recommended.

9. Brakes

9.1. All cars must be fitted with fully operational braking systems.

10. Transmission

10.1. For **Road Cars** and **Standard Cars** the reverse gear must always remain operable.

10.2. For all other Categories a reverse gear is recommended.

10.3. A propellor shaft restraint is recommended for all front engined **Vehicles** with rear wheel drive comprising of either hooks or a rigidly fixed steel panel minimum 18swg.

11. General

11.1. Timing Struts – Where timing is activated by a light beam the vehicles must be fitted at the front with a vertical timing strut minimum vertical height 254mm the bottom of which shall be not less than 180mm and no more than 200mm from the ground. The strut will be in matt black on both sides over its total area which shall be not less than 254mm by 51mm. No other or further forward part of the **Vehicle** may interrupt these dimensions or actuate the timing.

12. Road Legal Condition

12.1. Where cars are required to compete in a road legal condition they must comply with **Ch.7** of these regulations and all statutory regulations concerning the construction and use of vehicles. Such **Vehicles** must:

a. Be currently registered and taxed as a private car and

b. Have registration documents and

c. Where required by law **Vehicles** must hold a valid full MOT Certificate including lighting.

d. Display registration plates in compliance with the current **Road Vehicles** (Display of Registration Marks) **Regulations**, unless the **Official Documents** specify otherwise.

These documents must be produced at scrutineering UPON REQUEST.

13. Regulations for Standard Cars

13.1. Description

13.1.1. **Standard Cars:** Saloons and Sports Cars produced in quantities of not less than 5000 per annum being of unitary construction two-wheel drive and up to (except for Junior sprint and hill climb per **Ch.14 App.2 Art.1.9**) 2litre engine capacity. The **Vehicle** must be manufactured after 1st January 2000 and be Type Approved. Any replacement components fitted must be a **Standard Part / Standard Pattern Part.**

13.1.2. **Vehicles** must compete in an **Event** in a road legal condition as defined in these Regulations.

13.2. **Permitted Modifications**

13.2.1. Other than as detailed no other modifications are permitted:

a. Any **FIA / ASN** approved / homologated safety equipment may be installed.

b. Brake friction material may be uprated.

13.3. **Engine**

13.3.1. Forced induction equivalence 1.7.

13.4. **Wheels and tyres**

13.4.1. Standard wheels and tyres from **Ch.8 App.4 List 1A** only may be used.

14. Regulations for Road Cars

14.1. **Description**

14.1.1. **Road Cars** - **Series Production**: Saloons and **Sports Cars** produced in quantities of not less than 1000 per annum.

14.1.2. **Road Cars** - **Specialist Production Cars** with a minimum annual production of 20 **Chassis** which do not qualify as **Series Production Cars.**

14.1.3. **Road Cars – Electrified Series Production**, - **Standard Electrified Saloons** and **Sports Cars** in quantities of not less than 1000 per annum, compliant with **Ch.7 App.11 Art.1.9.**

14.2. **Vehicles** must compete in an **Event** in a road legal condition as defined in **Art.12**.

14.3. **Chassis**

14.3.1. Must conform to the **Manufacturer's** original chassis structure and specification of construction dimensions and material. Roll cages must not accept or assist any direct suspension loads.

14.4. **Body (including aerodynamics)**

14.4.1. Silhouette of the **Vehicle** must remain unaltered in construction dimension and material. The silhouette will be taken in the condition in which the **Vehicle** competes (convertible closed cars competing with the hood or top not erected shall have the silhouette determined in that condition).

14.4.2. Engine bonnet / cover and luggage / boot cover may be replaced with an alternative material.

14.4.3. Laminated windscreens permitted but all other glass may not be replaced by another material.

14.4.4. Interior trim must remain fitted (except floor carpets / mats).

14.4.5. All working equipment fitted as standard (heater window mechanisms sunroof door handles) must be operable at all times.

14.5. **Engines / Motors**

14.5.1. For Road Cars – Series Production: the cylinder block and cylinder head must remain in the original position and be externally identifiable as that fitted to the original model or specified option. Induction is free as are exhaust systems.

14.5.2. For Road Cars – Specialist Production: the cylinder block and head must be of a make and type produced in at least 1000 identical units originally available through the normal commercial channels of a land vehicle manufacturer.

14.5.3. Must be capable of being started from an onboard power source operable by the **Driver** when seated normally.

14.5.4. Exhaust catalytic converters are required per Ch.7 App.8 Art.1.8 except where a **Vehicle** does not require a catalytic converter in accordance with UK Government legislation.

14.5.5. Road Cars – Electrified Series Production: no modifications to the electrified propulsion system or powertrain are permitted.

14.6. **Wheels and tyres**

14.6.1. Except for **Period Defined Vehicles** (non-**Rally**) A-H inclusive tyres are to Ch.8 App.4 List 1A and **List 1B.**

14.7. **Suspension and Steering**

14.7.1. The suspension type mountings mounting method and position must remain the same as that fitted by the vehicle manufacturer with the exception of lever arm shocks which may be changed to Telescopic shock absorbers.

14.7.2. The shock absorbers may be of any make and may be uprated from standard.

14.7.3. Adjustable spring platform struts are permitted.

14.7.4. Springs are free but must retain their original location.

14.7.5. For Road Cars – Series Production bushes may be changed for similar polymer materials but not to spherical or similar metal joints.

14.7.6. For Road Cars – Specialist Production bushes may be changed for similar polymer materials spherical or similar metal joints.

14.7.7. Reciprocating ball steering may be replaced with rack and pinion.

14.8. **Transmission**

14.8.1. Road Cars – Series Production.

a. The gearbox and differential casing must be externally identifiable as that fitted to the original model or be a specified option and in either case remain in their original position;

b. The method of gear selection must remain standard (sequential selection only where fitted as standard).

14.8.2. Road Cars – Electrified Series Production**,** no modifications to the electrified propulsion system or powertrain are permitted.

15. Regulations for Modified Cars

15.1. **Description**

15.1.1. Modified Cars – Series Production: Must have been originally available through the normal commercial channels of the manufacturer in quantities of not less than 1000 **Vehicles** within 12 consecutive months.

15.1.2. Modified Cars – Electrified Series Production: **Modified Electrified Saloons** and **Sports Cars** in quantities of not less than 1000 per annum, compliant with Ch.7 App.11 Art.1.10**.**

15.1.3. Modified Cars – Specialist Production: Must have been originally available in quantities of not less than 20 **Chassis** over a period of 12 consecutive months.

15.2. **Vehicles** produced in lesser quantities may be admitted subject to the manufacturer obtaining approval from **ASN.**

15.3. **Safety**

15.3.1. See Articles 2 – 12.

15.4. **Chassis**

15.4.1. The **Chassis** or unitary construction must remain to the manufacturer's original specification in construction and material within the wheel hub centres with the exception of the following:

a. Re-positioning of suspension pick-up points and engine mountings are permitted.

b. Inner wheel arches only may be modified to allow the attachment of damper mountings.

c. It is only permitted to make holes for the passage of cables fuel water oil hydraulic instrument or fire extinguisher lines as per **ASN Vehicle Regulations**. All redundant holes must be covered with metal plates.

d. Reinforcing of the **Chassis** is allowed.

e. **Bulkhead**s and / or inner wings may be modified to permit the clearance of the induction system. This shall be understood to include air induction ducting manifolding trumpets / ram pipes for engine carburation or fuel injection system only.

f. Localised alteration for the passage / clearance of the exhaust system.

15.5. **Bodywork (including aerofoils)**

15.5.1. Silhouette of the **Vehicle** as seen in side elevation must remain unaltered with the exception of engine bonnet/cover and boot lid / rear deck.

15.5.2. The doors engine bonnet / cover luggage compartment cover boot lid / rear deck or bodywork not forming part of the unitary construction may be changed for ones of different material. Wheel arch extensions are free.

15.5.3. Alternative materials may be used for external mudguards if attached by bolts and / or rivets.

15.5.4. Detachable hardtops are permitted providing the silhouette remains unaltered.

15.5.5. It is permitted to replace any glass window with plastic **Ch.7 App.2 Arts.22.7–22.8** apply. A hole approximately 15cm diameter may be cut in the window next to the **Driver** for signalling or ventilation.

15.5.6. Demisting apertures are permitted in the rear windscreen / windows. They must be in the form of holes or slots and be positioned close to the top or sides but not both.

15.5.7. Open car with hoods may have them removed. **Vehicles** may run open or closed. If running closed a rear window of safety glass or plastic of minimum thickness 4mm is mandatory. Tonneau covers are permitted providing they are of flexible material and were originally specified for the **Vehicle.**

15.5.8. Front spoilers / air dams / splitters are permitted below the level of the road wheel centres up to 15cm beyond the overall plan periphery of the existing bodywork excluding bumpers.

15.5.9. Rear spoilers are permitted within the overall plan periphery of the original **Vehicle** excluding bumpers. A rear spoiler is a raised surface of opaque material integral with the rear deck with no gaps or openings in the surface front or rear and not exceeding half the vertical height of the original rear window fitted into the vehicle measured at the centre of the original window. The **Vehicle** manufacturer's original equipment or a specified option for that **Vehicle** is also permitted.

15.5.10. It is permitted to remove the floor carpets underfelt and sound insulation throughout the **Vehicle** as well as the rear seat the passenger's front seat and the head lining.

15.5.11. It is permitted to carry out modifications to window winders instrument panels and all driving controls.

15.6. **Engine / Motors**

15.6.1. The engine block must be externally identifiable as that fitted to the original model or a manufacturer specified option. Modification to all components is permitted.

15.6.2. With the exception of any engine fitted to a **Vehicle** complying with **Art.15.1.1–15.1.2** the engine must be of a make and type produced in at least 1000 identical units and fitted to a **Vehicle** originally

available through the normal commercial channels of a land vehicle manufacturer.

15.6.3. Induction system free.

15.6.4. Oil coolers dry sump lubrication systems or additional water radiators are permitted within the periphery of the bodywork.

15.6.5. Must be capable of being started from an onboard power source operable by the Driver when seated normally.

15.6.6. Engine and transmission must remain in a similar position within the **Vehicle** and in the same position relative to each other as in the original model.

15.6.7. Modified Cars – Electrified Series Production: no modifications to the electrified propulsion system or powertrain are permitted.

15.7. **Transmission**

15.7.1. Transmission layout to remain as original.

15.7.2. Gearbox and differential are free.

15.7.3. Driven axle(s) free (see **Art.15.8.4**).

15.7.4. Modified Cars – Electrified Series Production: no modifications to the electrified propulsion system or powertrain are permitted.

15.8. **Suspension**

15.8.1. Additions and modifications to springs shock absorbers or suspension height are free.

15.8.2. The original type of suspension must be maintained (e.g. twin wishbone set-up cannot replace a single wishbone suspension; a sliding pillar cannot be replaced by a MacPherson strut; a trailing link cannot be replaced by wishbones or coaxial springing).

15.8.3. A live rear axle may not be replaced by an independent system or De Dion.

15.8.4. A live rear axle is allowed location links. If lever-arm shock absorbers are an original fitment they may be replaced by a single location link.

15.8.5. Suspension pick-up point positions may be altered providing the suspension system is maintained as being the original type.

15.8.6. Road springs are free.

15.8.7. The wheelbase must be to the dimensions of the original **Vehicle** plus or minus 2% or 5cm whichever is the greater.

15.9. **Electrical**

15.9.1. Electrical generators may be disconnected or removed.

16. Regulations for Sports Libre Cars

16.1. **Vehicles** that comply with any of the following Groups:

a. Any closed wheel **Vehicle** that does not comply with any other category as defined in these **Regulations.**

b. Bespoke electrical Vehicles compliant with **Ch.7 App.11 Art.1.11**.

c. **Sports Racing Cars**

d. Single seat closed wheel **Racing Car** the rear wheels enclosed by continuous bodywork.

16.2. **Touring Cars** and **Sports Cars**, **Aerodynamic devices** are permitted subject to the following:

a. Rear wings and rear diffuser must not protrude by more than 200mm above the highest point of the roof or from the rearmost point of the Standard **bodywork**/bumpers.

b. Front spoiler must not protrude more than 200mm from the foremost point of the Standard **bodywork**/bumpers.

c. Any **Aerodynamic Device** (including extended wheel arches) must not protrude more than 200mm from the **vehicle**, measured at the sides from a point on the waistline directly below the Standard door mirror, and from the Standard **bodywork**/bumpers.

d. No **Aerodynamic devices** can be located directly above the bonnet of the car.

e. Flat floors are permitted.

f. Any **Aerodynamic Device** must be rigidly secured to the entirely sprung part of the **vehicle** (rigidly secured means not having any degree of freedom) and must remain immobile in relation to the sprung part of the **vehicle** (active aero is not permitted).

g. Any **Aerodynamic Device** or construction that is designed to bridge the gap between the sprung part of the **vehicle** and the ground is prohibited under all circumstances.

17. Regulations for Open Wheel Single Seat Racing Cars

17.1. Dimensions

17.1.1.

Maximum width ahead of front wheels	1500mm
Maximum width behind front wheels	1400mm
Maximum height of any part wider than 1100mm ahead of the front wheels	Not to exceed the top of the front wheel rim
Maximum height	900mm from the ground
Maximum rear overhang	1500mm behind rear wheel axis.

17.1.2. Maximum height is measured with the car in any condition and Driver aboard. Safety roll-over bars and air boxes are not included in this measurement.

17.2. Wheels

17.2.2. Twin rear wheels are permitted.

CHAPTER 14 SPRINT, HILL CLIMB AND HOT LAP CHALLENGE

Appendix 5 - Specific Regulations for Hot Lap Challenge

Throughout these sections an asterisk(*) indicates a requirement for additional information to be printed in the **Official Documents.**

1. General

1.1. Unless stated hereafter, **Organisers** must comply with Ch.3 and 14 of these **NCR.**

1.2. *For any Technical or Safety criteria not provided for by these Specific Regulations the **Official Documents** must state the definitive source of reference.

1.3. *The **Official Documents** must state what qualification is required to drive a specific **Category** of **Vehicle.**

1.4. **Category of Driver**: There will be:

a. **Intro-Class** for which a minimum of a **RS Clubman Licence** is acceptable

b. **Club-Class** for which a minimum of a **RS Interclub Licence** is acceptable

c. **Pro-Class** for which the **Driver** must be in possession of a **Race Club Licence** as a minimum.

1.5. Designation in regard to Art.1.4b. and c. above is made by the **Organising Committee** and will be based upon a **Driver's** previous motor sport experience, in the first instance, and then may be dependent upon other factors e.g. engine capacity, **Vehicle** weight, lap times and previous **Hot Lap Challenge** classification.

1.6. The **Intro-Class** provides for an opportunity to experience competitive motor sport on an **Event**-by-**Event** basis.

a. The **Class** will run separate to any other session.

b. The **Competitor** will not score **Points** nor be classified, qualify for any end of day awards or set lap records.

c. The **Vehicle** must run on Ch.8 App.4 List 1A or 1B tyres.

d. Any **Competitor** who achieves a lap time within 5% of the fastest time of the **Class** above on three or more occasions will be reviewed by the **Organising Committee** who may require the **Driver** to upgrade to the **Club-Class.**

1.7. Where the **Event** forms a round of a **Series** or **Championship** a **Competitor** who achieves a lap time within 5%, three or more times, of the fastest time of the **Class** above them will be reviewed by the **Organising Committee** who may require the **Driver** upgrades to that **Class.**

1.8. A new **Driver** who has not previously held a **Competition Licence** will be observed during **Practice** by the **Clerk of the Course**. It is the **Drivers**' responsibility to report this fact when signing on and await the instructions of the **Clerk of the Course.**

1.9. A **Driver** may be required to make runs under observation at any time.

1.10. Unless stated hereafter **Vehicles** must comply with Chapters 7, 9 and 14 of the **NCR.**

1.11. For Commercial type vehicles Ch.7 App.2 Art.22.5 applies.

1.12. *Classification shall be as prescribed in the specific **Class** regulations contained within the **Official Documents.**

1.13. **Competition Numbers** must be in compliance with Art 5.

1.14. Tyres – Club Class to Ch.8 App.4 List 1A or 1B. Pro Class free.

1.15. **Competition Format.**

Session 1 – **Warm Up** – will be untimed.

Session 2 – **Practice** – will be a timed session.

Session 3 – **Qualifying** – will be a timed session. The fastest **Drivers** will proceed into Session the **Final**. The number of **Competitors** proceeding to the **Final** will be confirmed in the **Final Instructions**.

Session 4 – The **Final**.

1.15.1 There will be: **Warm Up**, **Practice**, **Qualifying** and **Final**. These **Sessions** are always open **Pit Lane** and can vary from 15 minutes to 20 minutes per **Session**.

1.15.2 All **Classes** will participate in the **Qualifying Sessions**. The **Vehicles** to go forward into the **Final** will be confirmed in the **Official Documents**. The overall winner will be declared as that **Driver** who has posted the quickest lap time in the **Final**.

1.15.3 **Organisers** reserve the right to split / amalgamate **Classes** at their discretion in all sessions.

1.15.4 By display of their headlights **Drivers** indicate they are attempting their flying lap (hot lap).

1.15.5 Overtaking should only be carried out on the left.

Driving Standards Observers

1.16. In consultation with the Clerk of the Course, Driving Standards Observers may position themselves at any point and may operate and report on a random basis as considered appropriate.

2. Marshals

2.1. **Marshals** shall patrol between the course and all unfenced enclosures. Those stationed outside the pits, paddock or enclosures should be warned to remain behind protective barriers, in the event of an impending incident. Officials should be briefed on their duties and wear no clothing whose colour might be confused with **Signal** colours.

3. Restrictions on Organisers

3.1. No **Competition** or **Practice** may take place until:

a. The **Chief Medical Officer** has reported to the **Senior Clerk of the Course** that the necessary **Doctors** / **Paramedics**, mobile ambulance vehicles and first aid personnel are present and have been briefed. If no ambulance or suitable substitute vehicle is available at the **Event**, the **Competition** or **Practice** must be suspended (Ch.11).

b. The **Stewards of the Event** have seen the **Fire Equipment Certificate** referred to in Ch.10 App.4 Art.3.

c. The **Clerk of the Course** has reported to the **Stewards of the Event** that the conditions of the **Permit** and **Track Licence** are fulfilled. Before making such a report the **Clerk of the Course**, or a **Deputy** appointed by them specifically for such purpose shall inspect the **Course** and its installations.

d. The **Clerk of the Course** is sure that breakdown vehicles are present in sufficient number to cope with any incidents which may be expected having regard to the type of **Course** and number of **Competitors.**

e. The **Clerk of the Course** is satisfied that the **Licensed Rescue Vehicle(s)** are positioned in accordance with the **Track Licence**.

4. Scrutineering

4.1. Must be read in conjunction with the provisions of Ch.14 in its entirety. If after approval for an **Event** any

Vehicle is dismantled or modified in a manner which may affect its safety or eligibility or is involved in any incident which is likely to have a similar effect or is driven in **Practice** or **Competition** at another **Event** it shall be represented for approval. The **Entrant** shall be responsible for seeking such fresh approval.

4.2. Any **Vehicle** involved in an incident which is rendered unable to proceed or where any person is injured must not be touched by any person other than **Officials** without the specific approval of the **Clerk of the Course**. The **Driver** concerned may not participate again without the approval of the **Chief Medical Officer.**

4.3. No **Vehicle** taking part in an **Event** may be taken away from the **Circuit** before the final technical checks have been concluded for that session and **Vehicles** released from **Parc Fermé** without the prior authority of the **Chief Scrutineer** who will report such to the **Clerk of the Course.**

4.4. The **Organising Committee** may request the **Clerk of the Course** to verify the eligibility of a **Vehicle** by requiring it to **Practice.**

5. Competition Numbers

5.1. **Vehicles** will be identified by means of a **Competition Number** allocated by the **Organisers** and displayed as specified in **Ch.7.** The use of "0" or "00" is prohibited unless preceded by any number 1 to 9.

5.2. The numbers shall be in position before the **Vehicle** is presented for scrutiny and will be subject to approval as to position, legibility and size. Modifications may be required as a result of observations during **Practice.**

5.3. **Competition Numbers** must be covered at all times when driving on the **Public Highway**.

5.4. The **Chief Timekeeper** may decline to record the performance of any vehicle whose **Competition Numbers** are not readily apparent to the lap recorders.

5.5. On any **Vehicle** driven by a person who has not received six car race or **Hot Lap Challenge** signatures on their **Competition Licence** there shall be on the back of the car a yellow square 7in x 7in with a black diagonal cross with strokes 6in long and 1in wide.

5.6. The **Organisers** may in addition to the number format provided in **Ch.7 App 10** also permit **Competition Numbers** to be moved to the rear side windows (above the drivers' name) on the **Vehicle** in which case.

5.7. The numbers for each rear side window, shall be:

a. a minimum of 200mm high

b. with a stroke width of at least 20mm

c. coloured reflective yellow.

5.8. In addition the windscreen of these **Vehicles** must display the **Competition Numbers** positioned on the upper area of the **Passenger's** side of the windscreen, as follows:

a. the numerals must be at least 150mm high

b. be in the same colour and font as those displayed on the rear side windows

c. be placed no closer than 50mm from the lower edge of the windscreen "sun- strip" and 50mm from the side edge of the windscreen.

Competition Restrictions

6. Drivers

6.1. Ensure that during **Practice** and the **Competition** no team personnel are allowed on the **Track** with the exception of **Art.6.2 below**.

6.2. When a **Vehicle** is at its designated pit, team personnel (in accordance with **Art.7.3 below**) may work on the **Vehicle**. Should there be an approved signalling area one **Timekeeper** and one signaller for each **Vehicle** may be in this area.

7. Pit and Paddock Regulations

7.1. Refuelling and work upon the **Vehicles** other than by a **Driver** or **Officials** may only be carried out at the pits or in the **Paddock** (Ch.10 App.4 Art.3.4). Unless expressly permitted by the **Official Documents** refuelling may not take place during a **Practice** session, **Qualifying** session or **Competition.**

7.2. A **Driver** shall vacate the **Vehicle** and the engine be stopped throughout any refuelling operation. Refuelling within the pit lane may only be carried out using either a churn of no more than 25 litres capacity equipped with a self-seal connection and closed loop breathing system or a refuelling rig in compliance with **FIA** requirements. In addition the **Entrant** shall ensure that throughout refuelling one person shall stand by the **Vehicle** with a fire extinguisher at the ready. Any personnel refuelling the **Vehicle** or on standby with a fire extinguisher during a pit stop must wear a safety suit in accordance with Ch.9 Art.3 and flame-resistant balaclava and gloves in accordance with **FIA** regulations.

7.3. A maximum of one **Timekeeper** and one person detailed by the **Entrant** for the purpose of signalling may be on the pit wall / signalling area at any time unless the **Official Documents** stipulate otherwise.

7.4. With the exception of Art.7.3 above only the fire cover attendant specified in Art.7.2 above the **Driver** and two other persons may be on the **Course** / in the pits in attendance on one **Vehicle** unless the **Official Documents** state otherwise.

7.5. If any fuel is stored in a pit the **Entrant** of the **Vehicle** using that pit shall ensure that an effective fire extinguisher is kept adjacent to such fuel.

8. Incidents

8.1. The **Clerk of the Course** shall ensure that after every incident involving a competing **Vehicle** or vehicles the following are informed:

a. The **Chief Scrutineer** where mechanical failure is suspected, mechanical damage is substantial, or the completion of a serious incident form is necessary

b. The appointed **ASN** Steward where there is injury involving treatment beyond the capability of the **Venue** staff or where judicial action is likely or has been taken.

8.2. No **Vehicle** or **Driver** involved in a serious incident shall continue in **Practice** or the **Competition** nor may leave the **Venue** without approval of the **Chief Scrutineer** or **Chief Medical Officer** as appropriate. Full details of such approval must be delivered in the **Stewards Report** to the **ASN**

8.3. At the conclusion of each **Session** each **Post-Chief** shall report any incidents in writing to the **Clerk of the Course**. **Post-Chiefs** will also pay attention to driving standards.

9. Practice

9.1. Every Driver including **Drivers** of **Vehicles** which are to give performance demonstrations, must be given the opportunity of practising in conditions similar to those to be expected in the **Competition.** Any **Driver** who has not previously competed over the **Course** in its current layout, within the preceding twelve months, must complete at least three **Practice** laps in the **Vehicle** to be used by them during which they shall satisfy the **Clerk of the Course** as to their competence.

9.2. **Drivers** must be given at least the following opportunity for practising:

a. **Organisers** will provide a period sufficient to allow at least three laps of **Practice** in the prevailing conditions. It is recommended to schedule a period of 10 minutes of practice if the track is less than one mile in length; 15 minutes for a track between 1 mile and 2.5 miles; and 20 minutes for tracks over 2.5 miles.

b. **Organisers** will provide a separate **Practice** session for each category, **Championship** or **Series** (unless the **Official Documents** state differently). Qualified reserves shall enjoy precedence over **Competitors** practising entirely out of session or whose **Practice** times have been disallowed for whatever reason including on grounds of **Vehicle** eligibility.

c. **Drivers** whose best lap time exceeds by more than 10% that of the third fastest car within its **Class** (where similar weather conditions prevailed) may be **Disqualified** at the discretion of the **Clerk of the Course.**

d. During practising the number of **Vehicles** on the **Course** shall not exceed the number permitted in a **Race** by more than 20% unless the **Track Licence** specifies otherwise.

10. Starts

10.1. Starting positions will be determined by:

a. **Practice** times, or

b. handicap, or

c. selection made with the object of placing the fastest driver at the front, or

d. current positions in a championship, or

e. ballot (method specified in writing in the Official Documents).

f. **Signals**

10.2. **Signals** shall be in accordance with the following:

a. Each **Flag Marshalling Post** shall be provided with a **Hazard Area Board** and the following **Signals**: Yellow, Yellow and Red, Green, Blue, Red, White and Purple (if required), and shall be staffed by **Marshals** who are competent in their use. The **Clerk of the Course** shall be provided with, or have under their direct control, a **Red Signal**, a **Black Signals**, a Black and White **Signal** split diagonally, and a **Black Signal** with an Orange disc, together with means for clearly displaying a competing **Vehicle's** number should it be necessary, as well as penalty boards. The National flag and a Black and White chequered **Signal** shall be available at the **Start** and **Finish Lines** or lines for appropriate use.

b. All **Marshals'** posts shall show a **Green Signal** during the first lap of each session.

c. **Officials' Signals** will be conveyed to drivers by the following **Signals** which may be displayed by an appropriately coloured panel to which the **Competitor** number may be attached:

i. Red / Green lights or National flag: Session start.

ii. Blue **Signal**– Stationary: Another **Competitor** is following close behind.

iii. Blue **Signal** – 'Waved': Another **Competitor** is trying to overtake.

iv. White **Signal**: A service car or slow moving **Vehicle** is on the **Circuit**. The white **Signal** will be waved to indicate the sector of the **Track** that the slow moving **Vehicle** is in, and held stationary whilst the **Vehicle** is in the next sector.

v. Yellow **Signal** – 'Waved': Danger, slow down sufficiently to ensure that full control of the **Vehicle** can be retained. No overtaking.

vi. Yellow **Signal** – Double 'Waved': Great danger. Slow down considerably. Be prepared to suddenly change from the projected racing line or take other evasive action including stopping if necessary. No overtaking. (This **Signal** may be supplemented or replaced by flashing yellow light(s) as an added warning.)

vii. Yellow **Signal** with Red Stripes – Stationary: Slippery surface ahead.

viii. Yellow **Signal** with Red Stripes – Waved: Slippery surface imminent.

ix. Green **Signal** – 'Waved': All clear at the end of a danger area controlled by yellow **Signals.** Also used to **Signal** the start of a session.

x. Red **Signal**: Immediately cease driving at competition speed and proceed slowly, without overtaking, and with maximum caution to pits or start line obeying **Marshal's** instructions and being prepared to stop should the **Track** be blocked.

xi. Black **Signal** with Orange disc displayed with the **Competitor's** number: Notification of

apparent mechanical failure or of a fire which might not be obvious to the **Driver**. The **Vehicle** concerned must call at its pit for repairs on the next lap.

xii. Black and White Rectangular **Signal** split diagonally and displayed with the **Competitor's** number: A warning to the **Driver** that their behaviour is suspect and that they may be Black-**Signalled** on further reports.

xiii. Black **Signal** displayed with the **Competitor's** number: The **Driver** must stop at their pit on the next lap of receiving the **Signal** and report to the **Clerk of the Course**. A penalty of disqualification may be enforced by display of the Black **Signal.**

xiv. Black and White Chequered **Signal**: End of session.

xv. **Hazard Area Board:** A warning of a hazard that was not present when the sesson commenced.

d. At an incident where the **Track** is obstructed or **Marshals** are working at the trackside the following **Signals** will be used:

i. A 'waved' Yellow **Signal** at the post before a double 'waved Yellow **Signal**. (This 'waved' yellow **Signal** may also be supplemented or replaced by flashing yellow warning lights).

ii. A double 'waved' Yellow **Signal** at the post immediately preceding the incident. (These 'waved' yellow **Signals** may also be supplemented or replaced by flashing yellow warning lights).

iii. A 'waved' Green **Signal** at the post immediately after the incident.

iv. If the incident is well off the **Track** and **Marshals** are not working at the trackside, the incident may be indicated by a single 'waved' yellow **Signal** followed by a 'waved' green **Signal** or by a **Hazard Area board**.

e. Overtaking or not slowing down is an offence from the point of passing the Yellow **Signal** until the Green **Signal** is passed.

f. If a hazard has been indicated by Yellow **Signals** as above then the **Signal** may be withdrawn even though the hazard remains. It will then be indicated by a **Hazard Area Board** at the **Signal** post preceding the hazard. It is then the **Competitor's** responsibility to take appropriate care.

g. When a **Session** is stopped by the **Red Signal**, (Art.10.2.c.x) the **Clerk of the Course** is not obliged to resume the **Session**.

h. Other than the **Starter's Signal** the minimum size for any **Signal** or appropriately coloured signal panel (Art.10.2.c.) is 75cm x 60cm. (N.B. **International Regulations** require the Red **Signal** to be 80cm x 100cm minimum).

i. Once the Black and White chequered **Signal** has been displayed the **Competition** is over, and may not be restarted.

Chapter 15

Drag Race

CHAPTER 15 DRAG RACE

This Chapter must be read in conjunction with Chapters 1 – 11 and Drag Racing Yearbook as appropriate.

1. General

1.1. **Permits** for **Drag Race** are issued at the sole discretion of the ASN and are dependent upon a valid **Track Licence** being in existence.

1.2. Except as provided by this Chapter **Drag Race Events** must comply with the relevant provisions of **Chapters 1 – 11** and the **Drag Racing Yearbook**.

1.3. The **Drag Racing Yearbook** applies and may apply further limitations or requirements in addition to the following. The **Drag Race Yearbook** is NOT subject to the **ASN** stability regulations and amendments may be invoked as deemed necessary for the orderly conduct of the sport.

1.4. For any **Technical** or **Safety** criteria not provided for by these **Specific Regulations** the **Official Documents** must state the definitive source of reference.

1.5. **Permits** may be issued for a **Drag Race** or a **Straightline Event** which will be run in accordance with the **Straightline Event Guidelines.**

1.6. A Club will only be allowed to organise **Events** up to **National** status unless **ASN** has specifically approved an application for higher status.

1.7. If a **Championship** round is cancelled or changes its date due to reasons of safety or force majeure the **Championship Organiser** may arrange for an alternative **Event** or date for an **Event** to be included in their **Championship** calendar. Subject to **Ch.1 Art.1.4** only two such changes will be permitted during the duration of that particular **Championship** and the proposed amendment must be subject to **ASN** approval and will only be permitted if all registered **Competitors** have been advised and less than 15% (rounded up to the next whole number) of the **Competitors** registered for the **Championship** object to the change in writing. **Competitors** failing to respond within 4 weeks (28 days) from the date of the **Organiser's** written proposal to change being sent will be considered to agree to the change.

2. Officials and their duties

2.1. Unless stated hereafter **Officials** must comply with **Ch.5.**

2.2. **ASN Licensed Clerks of the Course, Timekeepers** and **Scrutineers** appropriate to the grade of the **Event** must be appointed.

2.3. At all **National** and above **Events** there should be at least one licensed **Deputy / Assistant Clerks of the Course** in addition to the **Clerk of the Course.**

2.4. At all other **Events** it is recommended that there be at least one **Deputy / Assistant Clerk of the Course** in addition to the **Clerk of the Course**. Any **Deputy Clerks** must be licensed but **Assistant Clerks** need not necessarily be so.

2.5. The **Race Director** shall have the same responsibilities duties and powers of a **Clerk of the Course** and the same discretion in the general conduct and control of the **Event** and the application of penalties for any infringement by participant or **Vehicle.**

2.6. Subject to the prescriptions of the **NCR** the decision of the **Race Director** shall be final.

2.7. Whenever possible there shall be at least two **Timekeepers** at **Events**.

Competitors

3. General

3.1. Unless stated hereafter **Competitors** must comply with Ch.6

3.2. Participants shall be deemed to be any person within the meaning provided in Ch.6

3.3. and Ch.1 App.1.

3.4. The display of any identification, badge or pass will be deemed to identify the person concerned with the **Entrant** and will imply their acceptance of these **Regulations.**

3.5. **Entrants** and **Drivers** must ensure they have a **Competition / Entrant Licence** valid for the **Event.**

3.6. When signing on a valid **Competition / Entrant Licence** for **Entrant** and **Driver** must be produced.

3.7. For **Drivers** under the age of 18 years a **PG Entrant Licence** is required (Ch.6).

3.8. The **Official Documents** must state what qualification is required to drive a specific category of **Vehicle.**

3.9. Where a **Driver** is required to make an observed run prior to taking part in the **Competition** it is the **Drivers'** responsibility to report this fact when signing on and await the instructions of the **Race Director.**

3.10. The **Race Director** may forbid a **Driver** to take part in the **Competition** for reasons of safety or any apparent deficiency in performance.

3.11. A **Driver** may not drive more than one **Vehicle** in any category at the same **Event.** Dual eliminator registration is prohibited subject to that permitted in the **Drag Racing Book.**

3.12. Any **Driver** deemed to have driven in a manner not compatible with general safety or whose behaviour or actions is prejudicial to the interests of the **Organisers** or motor sport generally may be immediately **Disqualified** from the **Event** (Ch.2).

4. Competition Licence and Upgrading

4.1. See Ch.6.

5. Vehicles

5.1. Unless stated hereafter **Vehicles** must comply with the Drag Racing Yearbook.

5.2. **Trucks** or **Commercial Vehicles** are prohibited to take part in **Drag Races** without the prior approval of **ASN**. **Series Production Truck Vehicles** of up to 1 ton payload are permitted.

5.3. **Junior Dragsters** may not be included in any **Event** without the prior approval of the **ASN.**

5.4. **Class**ification shall be as prescribed in the specific **Class** regulations contained within the **Official Documents.**

5.5. Except for **Straightline Events** annual registration of **Vehicles** and **Drivers** with each **Organising Club** may be required as stipulated in the Drag Racing Yearbook.

5.6. Where **Registration** is required it must be submitted on the official **Race Vehicle Registration** form issued by each **Organising Club.** Forms which are amended incomplete or defaced are invalid.

5.7. Re-registration may be required for any change made to the classification of a **Vehicle.**

5.8. **Vehicles** may be given a permanent race number for the year.

5.9. Numbers must be displayed in accordance with the specific **Class** format; affixed in such a way to ensure their durability and legibility and be of sufficient contrast to their background. They shall be subject to the approval of the **Chief Timekeeper.**

5.10. The naming of a **Vehicle** will be subject to the approval of each **Organising Club**. Duplication of names will not be permitted.

5.11. Decals must be displayed as required by the **Event** or **Organiser.**

5.12. **Vehicles** must be in a clean and presentable condition throughout an **Event.** Personnel attending a competing **Vehicle** should be aware of the same considerations.

5.13. **Competition Numbers** must be covered or removed at all times whilst driving on the **Public Highway**.

6. Scrutineering

6.1. **Vehicles** must be presented for **Scrutineering** at the times specified in the **Official Documents**.

6.2. No **Vehicle** is permitted to take part in **Practice** or a **Race** without the approval of the **Chief Scrutineer**.

6.3. If after approval any **Vehicle** is dismantled or modified in a manner that may affect its safety or eligibility or it is involved in any incident which is likely to have a similar effect or any aerodynamic device is added or removed, it shall be represented for approval. The **Entrant** shall be responsible for seeking such fresh approval.

6.4. Any **Vehicle** involved in an incident which is unable to proceed shall not be touched by any person other than **Officials** without the specific approval of the **Clerk of the Course**. Furthermore, the **Driver** concerned may not drive again without the approval of the Chief Medical Officer of the Event.

6.5. Any **Vehicle** involved in an incident shall not be taken away from the **Course** without the prior authority of the **Clerk of the Course.**

6.6. The **Race Director** may require:

a. The eligibility of an **Entrant, Driver** or **Vehicle** to be checked at any time or prescribed place before or during the **Event** or afterwards subject to the **Entrant** being notified not later than half an hour after the publication of a valid provisional **Result.**

b. A **Vehicle** to be re-scrutineered at any time throughout the **Event**.

c. A **Vehicle** to be dismantled to ensure it complies with the **Regulations.**

d. An **Entrant** to supply such components and or samples as may be required.

e. A **Driver** to be medically examined for reasons of safety.

f. A **Vehicle** to **Practice** before its eligibility is verified.

7. Drivers

7.1. Throughout **Practice** and **Competition**, when the **Driver** is seated in the **Vehicle** they must wear clothing, helmet and goggles complying with the **Drag Racing Yearbook**.

7.2. Protective Clothing in accordance with GSR10.10 of the **Drag Racing Yearbook** is mandatory.

7.3. An approved FHR device fitted in accordance with the Drag Racing Yearbook is mandatory where specified in Class Regulations.

7.4. All these items required by **Arts.7.1–7.4** above must be produced for inspection and approval at scrutineering.

7.5. Only the **Driver** may be in a **Vehicle** during the **Competition** or **Practice**.

8. Pits Paddock and Track Fuel

8.1. The handling and storage of **Fuel** must comply with the law and local fire regulations.

8.2. The **Official Documents** shall specify the safe refuelling requirements at **Art.16 below.**

8.3. The fuelling and draining of **Vehicles** outside a designated fuelling area is forbidden.

8.4. The engine must be stopped during fuelling and the **Driver** must vacate the **Vehicle.**

8.5. The **Vehicle** must be clear of any **Fuel** handling or storage when starting the engine.

8.6. The **Entrant** must ensure that throughout fuelling a person will stand by the **Vehicle** with an adequate fire extinguisher.

8.7. Engine starting and Warm-ups: It is mandatory for a **Driver** or competent crew member to be seated in the

normal driving position at any time the engine is running.

9. Medical and Rescue (see also Ch.11)

9.1. **Ambulance and Staff. The Organisers** in conjunction with the **Chief Medical Officer** will ensure that during practice sessions and competition the following are in attendance:

a. Adequate first-aid staff (e.g. members of St. John Ambulance Association, British Red Cross Society or St. Andrew Ambulance Association).

b. Ambulances should be equipped with basic resuscitation equipment and if possible a Casualty Immobiliser for handling a patient over difficult terrain. These ambulances to be reserved for use in connection with casualties arising from the **Competition.**

c. It is important that the ambulance be so equipped that essential equipment does not have to be taken from any other Emergency Vehicle.

9.2. The minimum medical and rescue requirements (including **Practice**) are:

a. One **ASN Licensed Doctor** (or one **ASN-Registered Paramedic** and one ambulance).

b. The **Rescue Unit** and the Ambulance must be positioned to ensure unobstructed access to the **Course** as per the **Track Licence.**

c. There must be a second emergency vehicle equipped specifically for firefighting with the following minimum equipment:

i. 20lb (9kg) dry powder fire extinguishers.

ii. fire-resistant blankets 6ft x 6ft (2m x 2m). 2 pairs fire-resistant / industrial gloves.

9.3. In an emergency the **Chief Medical Officer** may at their discretion designate as an ambulance any **Vehicle** they deem adequate for this purpose.

9.4. When public attendance is expected suitable arrangements must be made by the **Organisers** for dealing with the first-aid requirements of spectators not arising from the **Event.**

10. Starting

10.1. The **Official Documents** will specify:

a. The starting **Signal.**

b. The method of timing.

c. When timing commences.

10.2. **Vehicles** shall be started from a standing start with the engine running.

10.3. No **Vehicle** shall be started whilst there is an obstruction in its path either on the course or in the braking area after the finish.

10.4. The finish line will be clearly indicated.

10.5. The number of **Vehicles** on a **Track** at any one time is that permitted by the **Track Licence.**

10.6. The starting order will be in classes as determined by the **Organisers** unless the **Official Documents** specify otherwise.

10.7. **Drivers** will be under **Starter's Orders** when instructed by the **Official Starter** to 'stage' in accordance with 'Staging' procedure and requirements set out in the **Drag Racing Yearbook.**

10.8. After crossing the **Finish Line**, competitors must slow down as appropriate and proceed as instructed.

11. Qualification

11.1. Except for **Straightline Events** a new **Driver** who has not previously held a **Competition Licence** will be subject to a cockpit orientation (blindfold) test.

11.2. A **Driver** may be required to make runs under observation at any time.

12. Paddock and Track Regulations

12.1. The spinning of wheels (tyre warming) will only be permitted in a designated area which should be clearly defined.

12.2. Refuelling and work on the Vehicles, other than by a **Driver** or **Officials** can only be carried out in the **Paddock** unless the **Clerk of the Course** specifically authorises otherwise.

12.3. The crew is limited to the number as stipulated in the class regulations within the **Drag Racing Yearbook** in addition to the **Driver** and **Officials** allowed in attendance on each **Vehicle** in the identified starting area.

12.4. Except while on the **Track** no competing **Vehicle** shall be driven at a speed exceeding 10 mph without the specific permission of the **Clerk of the Course.**

13. Penalties

13.1. Any specific penalties mentioned in these regulations do not preclude the imposition of additional penalties as deemed appropriate.

14. Instructions and Communications to Competitors

14.1. Any additional instructions published will be an **Official Document** of the **Event** under these **Regulations.**

15. Race Procedures

15.1. In accordance with the requirements of the **Official Documents** of the **Event**.

16. Refuelling

16.1. Refuelling and work upon the cars other than by a **Driver** or **Officials** may only be carried out at the pits or in the **Paddock**.

16.2. The **Driver** shall vacate the **Vehicle** and the engine be stopped throughout any refuelling operation.

16.3. The **Entrant** shall ensure that throughout refuelling one person shall stand by the **Vehicle** with a fire extinguisher at the ready.

16.4. Storage of **Fuel** is only permitted in containers having a screw or other approved safety cap and complying with the Law and local Fire Regulations.

16.5. If any **Fuel** is stored in a pit the **Entrant** of the **Vehicle** using that pit shall ensure that an effective fire extinguisher is kept adjacent to such **Fuel.**

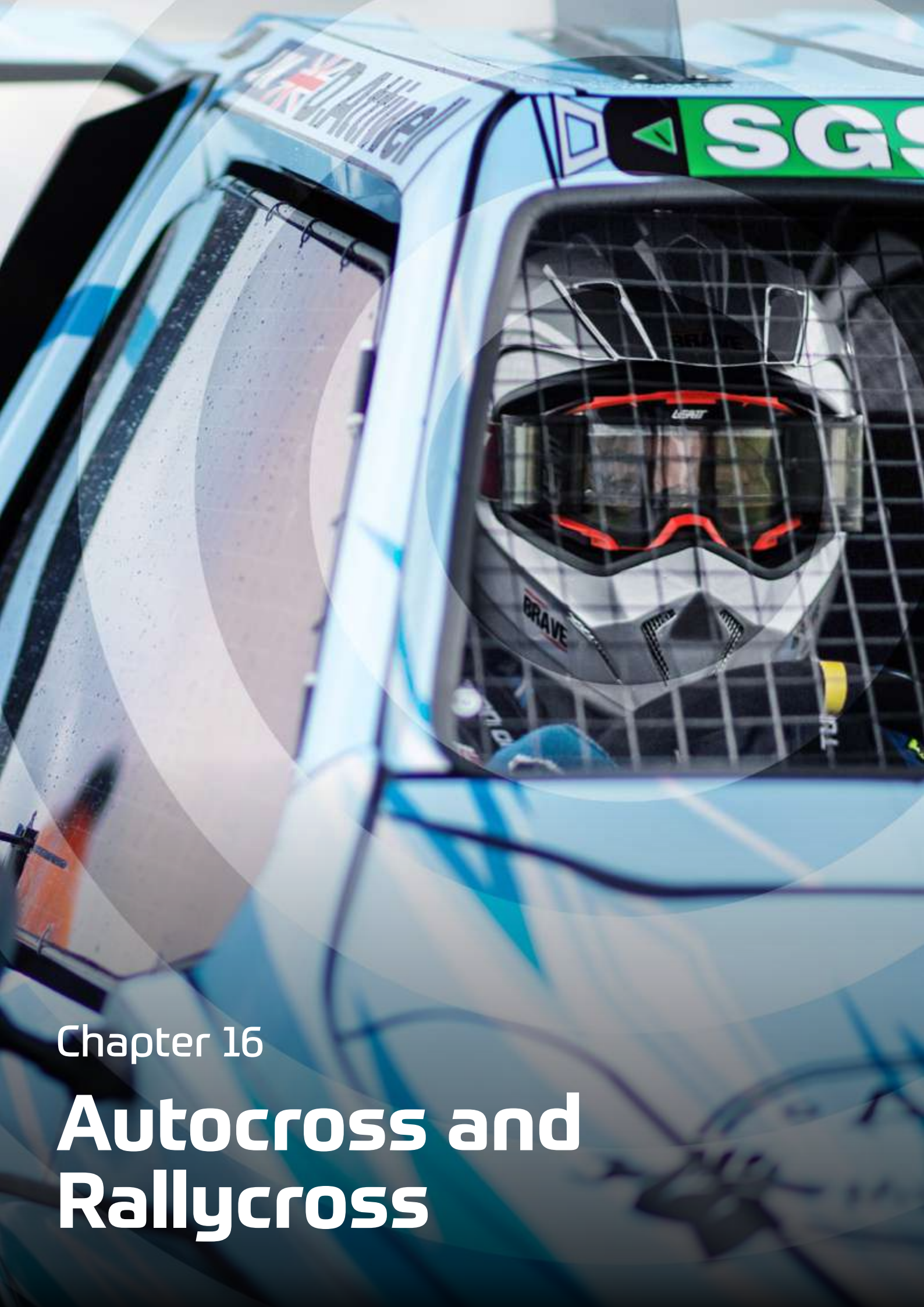

Chapter 16

Autocross and Rallycross

CHAPTER 16 AUTOCROSS AND RALLYCROSS

This Chapter must be read in conjunction with Chapters 1-11 as appropriate.
This Chapter is separated into the following appendices:

The following Appendices comprise **PART A (Autocross and Clubcross)**

App.1 Organisers Regulations

App.2 Medical and Rescue Requirements

App.3 Results

App.4 Competitors Regulations

App.5 Technical Regulations for Autocross and Clubcross

The following Appendices comprise **PART B (Rallycross)**

App.6 Organisers Regulations

App.7 Medical and Rescue Requirements

App.8 Competitors Regulations

App.9 Paddock Regulations

App.10 Technical Regulations

App.11 Rallycross Spaceframe Technical Regulations

App.12 Spaceframe Drawings

The following Appendix comprise **PART C (Off-Road Racing)**

App.13 Off-Road Racing Specific Regulations

CHAPTER 16 AUTOCROSS AND RALLYCROSS AND OFF-ROAD RACING

PART A (AUTOCROSS AND CLUBCROSS)

Appendix 1 - Organisers Regulations

1. General

1.1. **Permits** for **Autocross** and **Clubcross Event**s are issued at the sole discretion of the **ASN** and are subject to prior approval of the **Track** details.

1.2. A **Club** will only be allowed to organise an **Autocross Event** of up to **Interclub** status unless the **ASN** has specifically approved an application for higher status.

1.3. A **Club** will only be allowed to organise a **Clubcross Event** if in possession of a **Clubman** grade **Permit.**

2. Track Criteria

2.1. The requirement for a **Track Licence** will be waived, subject to approval of the **Track Plan** for the proposed **Course**.

2.2. The **Track Plan** must be submitted to the **ASN** for approval with the **Permit** application and must be on a sheet A4 scale or larger. It must include:

a. Name of the **Organising Club**, date of **Event** and name of **Venue**.

b. Length of **Course** (per lap).

c. Length of longest straight.

d. Position of the **Start** / **Finish Line** and direction of travel.

e. Minimum width of **Course**.

f. Position of paddock and spectator **Enclosures** and their distances from the **Course**.

g. Type of fencing surrounding **Enclosures** (a post and rope fence is the minimum **Permitted**).

h. Position and type of protective barriers.

i. Distance from the **Course** to all boundary lines.

j. Types of boundaries (ie hedge, fence, wire; if wire: mesh, plain or barbed).

k. Type of **Course** markers.

l. **Number** of **Judge**s required to ensure that all **Course** markers can be overseen by a **Judge**.

m. Siting of **Timekeeper**, **Flag Marshals**, fire, emergency and first aid equipment and ambulance.

n. **Number** of **Vehicles** proposed to start consecutively (see **Art.6 below**).

3. Course Layout

3.1. The **Course** should not include any straight exceeding 200m long, and all straights must be followed by a corner of at least 90°, off-setting the **Course** from its original line by at least twice the width of the **Track**.

3.2. The **Start Line** should be not less than 100m from the first corner.

3.3. The **Finish Line** should be situated so as not to allow competing **Vehicles** to be driven in a straight line from the **Course** to the paddock. Bales must protect the spectator and paddock areas where the entrance to the paddock is less than 30m from spectator **Enclosures**.

3.4. The paddock and any spectator **Enclosures** should not be less than 30m from the **Course** where there is no barrier designed to halt a competing **Vehicle** travelling between these **Enclosures** and the **Course.**

a. Where there is a barrier, the distance should not be less than 25m all the way round corners, and 20m alongside straights.

b. The minimum acceptable barrier will be two rows of straw bales or equivalent, placed approximately half way between the **Course** and the **Enclosures**.

c. The rows of bales must be approximately 3m apart and if each row is not continuous, any gaps must **not** exceed the length of a bale.

3.5. Any **Vehicles** parked in an **Enclosure** must be at least 10m from the front of the **Enclosure**.

3.6. Any natural hazards, such as trees, ditches and fences must not be less than 20m from the **Course** or in the case of any strand or barbed wire fence not less than 30m from the **Course** (though where hazards on the inside of the **Course** are protected by straw bales or the equivalent a 10m clearance from the **Track** is sufficient).

3.7. Straw bales must not be used as **Course** markers.

3.8. **Clubcross Courses must comply with** Arts.3.2–3.8 of this Chapter and the following:

a. The maximum length must not exceed 800 metres.

b. The maximum length of any straight must not exceed 100m and all straights must be followed by a corner of at least 90° off setting the **Course** from its original line by at least twice the width of the **Course**.

4. Organisation

4.1. **The Course** must be defined by penalty markers placed on both sides of the **Track**.

4.2. The number of penalty markers must be kept to the minimum necessary to ensure that **Vehicles** keep to the **Course**.

4.3. All penalty markers must be supervised by a **Judge of Fact** who must be in a safe location.

4.4. Other markers can also be used to show the outline of the **Course** but the penalty markers must be at least twice the height and of a different colour to any other markers.

4.5. There must be an adequate supply of spare markers and sufficient **Official**s to ensure that any marker that is displaced is immediately reinstated.

4.6. The **Course** must not be changed once practice has commenced except as instructed by **Stewards** to improve safety.

4.7. Any such change should be made at an appropriate time when all **Competitor**s will have an equal number of runs on the modified **Course**.

4.8. **Competitor**s must be informed of any such change and given the opportunity to inspect and comment upon the modifications.

4.9. Only a visual communication system is mandatory.

4.10. At each corner of the **Course**, there should be at least one **Flag Marshal** as well as one Fire **Marshal** with an extinguisher to cope with a petrol or electrical fire.

4.11. In the paddock at least one 9kg dry powder or equivalent extinguisher, one fire-resistant blanket and a pair of flame-resistant gloves should be available.

4.12. A **Small Spill Kit** must be available in the paddock area.

4.13. Only red flags will be issued to **Marshals** for signalling purposes.

4.14. If a heat is stopped by a red **Signal** it must be re-run.

4.15. Any **Vehicle** which had not started or which had retired from that heat may not take part in the rerun.

4.16. The appropriate local hospital authorities must be notified of the date and time of an **Event**, including **Practice**.

4.17. **ASN Timekeeper**s and **Scrutineers** appropriate to the grade of the **Event** must be appointed.

4.18. It is strongly recommended that a breakdown vehicle capable of lifting at least two wheels of a competing **Vehicle** off the ground is in attendance.

4.19. **Clubcross Event**s must not be timed to less than one second.

4.19.1. **Timing** should be by handheld watches and the appointment of an **ASN-licensed Timekeeper** is recommended.

5. Practice and Starts

5.1. All **Competitor**s must be allowed three practice laps except where they are required to walk the **Course** before competitive runs begin (or are allowed to drive over it at non-competitive speeds) when only two practice laps will be allowed.

5.2. The **Official Documents** must specify the starting **Signal**, the method of timing and when timing commences.

5.3. **Vehicles** will be started in groups from a standing start with engines running.

5.4. The **Finish Line** must be clearly indicated.

5.5. All **Clubcross Competitor**s will be given the opportunity to walk the **Course** prior to competing but no practice runs will be allowed, with all runs counting towards the **Competition**.

6. Number of Starters

6.1. If the **Course** is less than 10m wide a maximum of two **Vehicles** can be started consecutively. The second **Vehicle** is started when the first has a lead of not less than 200m (or one-third of a lap, whichever is the lesser).

6.2. If the **Course** is less than 10m wide but over 600m long three **Vehicles** can run consecutively so long as they are started not less than 200m apart.

6.3. If the **Course** is less than 10m wide at any point but over 600m long two **Vehicles** can be started simultaneously and a second pair started when the slower **Vehicle** of the first pair is at least 300m from the **Start Line**.

6.4. If the **Course** is not less than 14m wide at any point and over 1200m long two **Vehicles** can be started simultaneously and a second pair started when the slower **Vehicle** of the first pair is at least 300m from the **Start Line**. A third pair can be started when the slower **Vehicle** of the second pair is at least 200m from the **Start Line**.

6.5. If the **Course** is not less than 15m wide at any point and over 600m long then a maximum of four **Vehicles** may be started simultaneously unless specific approval has first been given by the **ASN**.

6.6. The starting of **Vehicles** consecutively at 200m intervals is subject to there being reasonable visibility. Where visibility may be impaired **Vehicles** should be started at greater intervals or singly so that there is no possibility of overtaking.

6.7. In the interests of accurate timekeeping, and because of the difficulty of correctly lining up vehicles on a soft surface vehicle-actuated starts are not permitted on non-metalled surfaces.

6.8. Only one **Vehicle** may run at a time in **Clubcross Event**s.

7. Team Relays

7.1. In **Autocross** relay **Event**s where **Vehicles** of more than one team are on the **Course** all **Vehicles** other than the first to start must be located in a safe position on the inside of the **Course** with their **Driver**s aboard.

7.2. Any **Vehicle** finishing except the last **Vehicle** of a team must do so by crossing a special line adjacent to but outside the **Course** proper. The **Vehicle** must then stop at a specified location and the **Driver** remain aboard until instructed by an **Official** to remove the **Vehicle** to the **Paddock**.

7.3. As soon as the front wheels of a finishing **Vehicle** cross this special line an **Official** will indicate with a green flag that the next team **Vehicle** can proceed. All **Driver**s joining the **Course** must do so with due regard to other **Competitor**s already on the **Course**.

8. Awards

8.1. The maximum value of awards or benefits accrued to any **Competitor** in an **Event** must not exceed the following:

a. **Clubman** and **Interclub**: £250

b. National and International: No limit.

9. Scrutineering

9.1. No **Vehicle** may be driven in the **Event** until it has been approved by an **ASN**-**Licensed Scrutineer** at the **Event**.

9.2. If after approval any **Vehicle** is dismantled or modified or is involved in an incident in a way which may affect its safety or eligibility or any aerodynamic device is added or removed it must be represented for approval. The **Entrant** is responsible for seeking fresh approval.

9.3. Any **Vehicle** involved in an incident from which it is unable to proceed must not be touched by anybody other than **Official**s without the specific approval of the **Clerk of the Course**. The **Driver** concerned may not drive again without the approval of the **Medical** Officer in Charge.

9.4. **Clubcross Vehicles** must be scrutineered for basic safety preferably by an **ASN-licensed Scrutineer.**

CHAPTER 16 AUTOCROSS AND RALLYCROSS AND OFF-ROAD RACING

PART A (AUTOCROSS AND CLUBCROSS)

Appendix 2 - Medical and Rescue Requirements

1.1. This Appendix should be read in conjunction with **Ch.11 Emergency and Medical Services.**

1.2. The minimum course requirements are for one **ASN Licensed Doctor** or **ASN**-registered Paramedic and one ambulance to be in attendance.

1.3. Ambulances should be equipped with basic resuscitation equipment and if possible a **Casualty Immobiliser** for handling patients over difficult terrain. This essential equipment should not have to be taken from any rescue vehicles which must remain at all times fully operational on the **Course**.

1.3.1 The ambulances must only be used in connection with casualties arising from the **Competition.**

1.4. The Organisers in conjunction with the **Chief Medical Officer** of the **Event** must ensure that during both **Practice** sessions and **Competition** adequate first-aid staff are in attendance (eg St John's or St Andrew Ambulance, Red Cross etc).

1.5. **Clerks of the Course** must have under their control either a licensed **Rescue Vehicle** or at least one emergency vehicle equipped with the following:

a. Bolt cutters

b. Pipe cutters capable of severing chassis tubes

c. Tin snips

d. Hacksaws complete with a quantity of blades

e. Pad saw complete with a quantity of blades

f. Spanners

g. Fire-resistant blanket

h. Industrial gloves.

CHAPTER 16 AUTOCROSS AND RALLYCROSS AND OFF-ROAD RACING

PART A (AUTOCROSS AND CLUBCROSS)

Appendix 3 - Results

1. Results – Autocross

1.1. To be classified as a finisher in a **Competition** a **Competitor** must complete at least one timed run.

1.2. Each **Driver** will be given two runs in the same **Vehicle** in each **Class** entered the faster run to count unless the **Official Documents** specify otherwise.

1.3. The **Competitor** who completes the **Course** fastest will be judged the winner.

1.4. Only an equal number of runs for all **Competitors** in the same **Class** will be counted. In the event of a tie between two or more **Competitors** the results of the next fastest run recorded by the **Competitors** concerned will be compared and so on.

1.5. If through their own error **Drivers** fail to record a time they are not entitled to a re-run.

1.6. In other circumstances (eg baulking) a re-run may be granted by the **Clerk of the Course** who may order that any penalties incurred in the initial run are applied to the re-run.

1.7. A **Competitor's** time will be valid only if:

a. All four wheels of the **Vehicle** are on the **Course** when it crosses the **Finish Line**

b. The run is made in the correct period for the appropriate **Class** and no more than the appropriate number of timed runs has been made

c. The **Competitor** has correctly complied with any starting **Signal**

d. The **Vehicle** completes the correct **Course** without outside assistance.

1.8. Where the boundaries of a **Course** are defined by penalty markers (see **App.1 Arts.4.1–4.5 to this Chapter**), the following penalties will apply:

a. If a **Vehicle** strikes a penalty marker five seconds is added to the **Vehicle's** time for each marker touched

b. If all four wheels of a **Vehicle** cross a straight line between any two markers no time is recorded and in addition the **Vehicle** must stop and not proceed until instructed to do so by an **Official.** Failure to stop may be deemed as driving in a manner incompatible with general safety (a breach of **Ch.2 App.1 Art.1.13**).

2. Results – Clubcross

2.1. **Competitors** will be given the opportunity of a minimum of two runs the aggregate time of which will count for the results.

2.2. If more than two runs are permitted the worst time will be ignored and the aggregate of the remaining runs will count for the results.

2.3. The maximum number of runs must not exceed six.

2.4. All **Competitors** must have the opportunity to complete the same number of runs to count towards the results.

CHAPTER 16 AUTOCROSS AND RALLYCROSS AND OFF-ROAD RACING

PART A (AUTOCROSS AND CLUBCROSS)

Appendix 4 - Competitors Regulations

1. General

1.1. **Vehicles** must be presented for scrutineering and **Practice** at the times specified in the **Official Documents** with any previous **Scrutineering Labels** removed.

1.2. **Classes** must be specified in the **Official Documents**.

1.3. Any **Competitor** not reporting as instructed may be fined, **Disqualified** or may forfeit any claim to a favourable starting position.

1.4. **Vehicles** being used must comply as follows:

a. In **Autocross** with **Technical Regulations** **Arts.1–12.3 of App.5 to this Chapter.**

b. In **Clubcross** with **Art.17.4 of App.5 to this Chapter.**

c. In **Junior Autocross** with **Arts.1–7.6 and 17.5 of App.5 to this Chapter.**

1.5. All Competitors must ensure that one fire extinguisher of at least 6kg of ABC type is available per **Vehicle** entered within their own area in the paddock.

1.6. All Competitors must ensure that a plastic sheet (minimum dimensions 3 x 4m for each **Vehicle**) is spread on the ground in the paddock place reserved for them where work is to be done on their **Vehicle**, in order to prevent any pollution in case of an accidental leak, etc.

2. Signing On

2.1. When signing on a **Competition Licence** valid for the **Event** must be produced (see **Annex A Chart 2 Ch.6**).

2.2. For **Competitors** under the age of 18 years a **PG Entrant Licence** is required **Ch.6 App.3 Art.2.13** applies.

2.3. **Competitors** must declare on their entry forms whether or not they have ever held a valid RTA licence.

2.4. **Competitors** aged 16 and above who have never held a valid RTA **Licence** must produce proof of having competed as a **Driver** in three **Minicross** or **Clubcross Events** or three other **ASN-Permitted Events** (such as **Kart Racing, Autotests, Production Car Trials,** etc), or show proof of having completed an approved driving course at a **Race** or **Rally School** recognised by the **ASN**.

2.5. **Competitors** having reached the year of their 14th birthday and above can compete in **Minicross** (grid size to be a maximum of four **Vehicles**) and **Clubcross**. In the case of **Minicross** new **Competitors** will have to drive observed laps prior to **Practice**. In the case of **Clubcross** they must drive observed laps prior to the **Competition** in order to satisfy the **Clerk of the Course** that they are competent to take part. Observed laps are not required if the **Competitor** can provide the **Clerk of the Course** with proof of having competed as a **Driver** in three other **ASN-Permitted Events.**

2.6. **Competitors** having reached the year of their 14th birthday and above may compete in **Junior Autocross** and may continue until the end of the year of their 17th birthday.

2.7. Grid size to be a maximum of four **Vehicles** and may not include any **Class** other than **Juniors.**

2.8. New **Competitors** will have to drive observed laps prior to the **Competition** in order to satisfy the **Clerk of the Course** that they are competent to take part, subject to the following:

a. **Vehicles** will start singly and run over three laps.

b. No **Passengers** are permitted in the **Vehicle.**

c. Observed laps are not required if the **Competitor** can provide the **Clerk of the Course** with proof of

having competed as a **Driver** in three other **ASN Permitted Events.**

3. Drivers

3.1. The following items must be produced by **Drivers** for inspection and approval at Scrutineering and be worn throughout the Competition, properly fastened and positioned:

a. A crash helmet meeting all current regulations, which fits properly, is in a serviceable condition and bears an ASN approval sticker (Ch.9 Arts.5–7.8).

b. Goggles or visor of splinter proof material (unless in a closed car with a full-size windscreen).

c. Flame-resistant overalls covering arms, legs and torso up to the neck. The use of a flame-resistant balaclava, socks, shoes and underwear is strongly recommended (Ch.9 Arts.3–4).

d. Complete gloves (not mitts or gloves with open backs). The use of flame-resistant gloves is strongly recommended.

e. An FIA approved FHR device, fitted in accordance with FIA regulations, is recommended.

3.2. In Autocross and Clubcross events, the same **Vehicle** may compete for the same award, however it must be driven by different Drivers.

3.3. **Vehicles** will be identified by Competition Numbers allocated by the Organisers and displayed as specified in the Technical Regulations (Ch.7 App.10). The colour may be varied for different categories.

4. Licence Upgrading Criteria

4.1. **Autocross**: See Ch.6 Annex A Chart 2

CHAPTER 16 AUTOCROSS AND RALLYCROSS AND OFF-ROAD RACING

PART A (AUTOCROSS AND CLUBCROSS)

Appendix 5 - Technical Regulations

1. General

1.1. **Racing Cars** are prohibited.

2. Body

2.1. If one bumper is removed then both must be along with all supports.

2.2. Reinforcing the front apron is not permitted.

2.3. Any undertray must be provided with drainage holes to prevent accumulation of liquids.

3. Wheels

3.1. At the start of each heat or race, **Vehicles** must be fitted with mudflaps behind all four wheels extending to a minimum of 38mm either side of the tyre tread and to a maximum of 76mm above the ground.

3.2. All nuts securing roadwheels (except centre-lock types) must be made of steel and in thread contact over a minimum length of $1^{1/2}$bolt / stud diameters.

3.3. Extended or composite wheel bolts/studs are prohibited.

3.4. The use of safety wheel nuts, to prevent wheels pulling over standard nuts, is strongly recommended.

4. Oil Systems

4.1. Any oil tank located outside the chassis or main structure of a **Vehicle** must be covered with a protective coating (eg GRP)

5. Fuel Systems

5.1. These should be equipped with an effective method of stopping fuel supply which can be operated by the **Driver** when seated normally with seat belt secured.

6. Electrical Systems

6.1. **Vehicles** should be equipped with an ignition cut-off switch having a clearly marked and positive ON–OFF position which can be operated by the **Driver** when normally seated with seat belt secured. It must also isolate electric fuel pumps.

6.2. Any forward-facing lamps of more than 32 sq cm surface area must be adequately protected against glass breakage.

7. Safety

7.1. Closed **Vehicles** must have a means of access on either side of the **Passenger** compartment which can be operated from inside or outside. Access must be sufficient to remove an occupant without interference from any door locking devices.

7.2. They must have an operating windscreen wiper and washer system.

7.3. The following parts of Ch.7 remain unmodified: **Chassis**, Seating, Suspension, Steering, Cooling, Weight / Ballast, Exhausts, Protecting Bulkheads.

7.4. Any single seat **Special** and non-centre seated Production based **Vehicle** without windows must be fitted with either arm restraints to SFI standard 3.3 or on the driver's side (both sides for a single seat **Special**) one-piece protection net(s) affixed securely on the inside of the safety cage using a quick release system situated on the upper part.

a. The use of "clip" fixings is recommended.

b. The fixings of the net on the lower part must not be removable without the use of tools. These nets must be to SFI standard 27.1 or have the following characteristics:

- Minimum width of the strips: 19 mm
- Minimum size of the meshes: 25 x 25 mm
- Maximum size of the meshes: 60 x 60 mm

and when viewed from the side must reach from the centre of the steering wheel to the rearmost point of the seat on the side concerned and must protect the window opening to the centre of the steering wheel.

8. Miscellaneous

8.1. **Vehicles** must be fitted with at least one mirror of minimum surface area 50 sq cm securely mounted to give a clear view to the rear. The edges of the mirror must be protected by a suitable cover to help prevent injury in event of an accident.

8.2. Where advertising is allowed on windscreens this must not obscure the **Driver**'s vision nor reduce the minimum unobstructed vertical height to less than 250mm.

8.3. **Vehicles** must be presented at **Scrutineering** with all steering mechanisms, suspension linkages and flexible brake lines in a clean condition.

8.4. Four-wheel steering is permitted unless the **Official Documents** state to the contrary.

9. Autocross Vehicles

9.1. **Categories** and **Classes** are free but must be stated in the **Official Documents**. The following **Classes** are recommended and where used must comply with **Arts.9.2–12.9 below**. Capacity splits must be specified in the **Official Documents**

a. **Economy** – "standard" production saloon cars

b. **Rally Vehicles**

c. All other **Vehicles** based on production **Vehicles**

d. **Special**s and all four-wheel drive **Vehicles**

9.2. **Vehicles** which have never been homologated but which comply with **App.16 Art.2.2** and **App.16 Art.2.3** are eligible for **Class** B (**Art.9.1b**).

9.3. **Category 1.** Those that have been homologated in Groups 'A' or 'N' of the **FIA** Appendix 'J', or Groups 1, 2, 3 or 4 of the 1981 **FIA** Appendix 'J', Non homologated **Series Production Cars** or **Specialist Rally Cars**

a. A **Specialist Rally Car** is a **Vehicle** of which at least 20 examples are manufactured within a consecutive twelve month period and is fitted with a **Series Production Car Engine** or **Specialist Competition Engine.**

b. Modifications are free within the **ASN Vehicle Regulations.**

c. The **Vehicle** must be in the configuration as supplied by the manufacturer, with the engine (any **Series Production Car Engine** or **Specialist Competition Engine**) in the original location.

d. **Vehicles** must retain the original number of and location of driven wheels, Front Wheel Drive (FWD), Rear Wheel Drive (RWD) or Four Wheel Drive (4WD), except where a 4WD **Vehicle** other than a **Specialist Rally Car** is converted to Two Wheel Drive (2WD) without structural alteration.

9.4. **Category 2.** Any **Vehicle** not complying with **Arts.9.3.a – d above** that may be authorised for use at the discretion of the **ASN** including **Vehicles** homologated and remaining fully compliant with **FIA** R/GT regulations.

a. Such authorisation will only be granted for **Vehicles** which retain the original manufacturer's **Chassis** / bodywork / unitary construction.

b. Substitution by a space frame **Chassis** will not be accepted.

c. Original manufacturer's bodywork must be utilised.

d. Any modifications homologated by the **FIA** may be incorporated.

e. Replica copies of manufacturers homologated body parts / aerodynamic devices will not be accepted.

f. Manufacturers of very low volume numbers of **Vehicles** will be able to apply for baseline specification registration prior to sale to individual customers.

g. The conversion of front wheel drive **Vehicles** to rear wheel drive (or four wheel drive) or of rear wheel drive **Vehicles** to four wheel drive is permitted subject to the bodyshell construction alterations from the bulkhead rearwards being limited to those detailed in **FIA** Art.279.10.3.10 and shown in **FIA** Appendix J Drawings 279-1 and 279-2. Additionally where rear wheel drive **Vehicles** are converted to four wheel drive the bodyshell forward of the front bulkhead may be modified solely to allow fitment of front driveshafts.

h. All materials added must be ferrous and must also be welded to the **Chassis** / bodywork / unitary construction.

i. Doors and windscreen must remain in the manufacturer's original material.

j. **Car**s must be fitted with an engine in compliance with **Arts.9.4.k – t below.**

k. **Production Car Engines:**

i. Petrol engines with a maximum of six cylinders, forced induction up to 2000cc with a 34mm restrictor or up to 2500cc with a 32mm restrictor, and diesel engines with forced induction up to 2500cc with a 37mm restrictor.

ii. Naturally aspirated with a maximum of six cylinders, and more than 2 valves per cylinder – up to 3000cc.

iii. Naturally aspirated with a maximum of six cylinders, and a maximum of 2 valves per cylinder – up to 3500cc

iv. Rover V8 pushrod engines up to 4000cc, utilising the original Rover head castings, and limited to either a maximum of 4 carburettor chokes or a single throttle body and the original plenum chamber.

l. Metro 6R4 2500cc and 2800cc (**Single** Plenum) engines complying with MSA Specification, exclusive to 6R4s.

m. **Specialist Competition Engines:**

i. Naturally aspirated.

ii. No more than four cylinders.

iii. No more than four valves per cylinder.

iv. Maximum capacity of 2,500cc.

n. Production **Car** Engines with a maximum of 2 rotors.

i. Rotary engine equivalence 1.7. Forced induction rotary engines equivalence (1.7. x 1.7.) = 2.89.

ii. Rotary engines will be considered equivalent to 4 valves per cylinder petrol engines in respect of the maximum engine capacity including the application of equivalency factor (a) above.

o. Forced Induction engines must be fitted with a restrictor at a maximum of 50mm from the extremes of the compressor blades. The restrictor orifice to be to the dimensions currently in force in **FIA** Appendix 'J'. Where there are two forms of forced induction fitted, the restrictor must not exceed the appropriate **FIA** Appendix 'J' dimensions. Provision must be made for fitting seals to the unit(s). A fee if £3.00 is payable for the sealing of turbo chargers.

p. With the exception of cars accepted under **Art.9.4.a - j** a **Vehicle** may be fitted with a different engine, not exceeding 25% increase of the capacity of the model, when it was supplied as original equipment by its manufacturer.

q. The engine capacity of **FIA** R/GT cars complying with this **Art.9.4.a - j** shall be limited to the current **FIA Regulation**s.

r. Engine Oil **System**s – Unless equipped with a closed loop system, a Catch tank of at least a one litre capacity to be incorporated in the oil breather system.

s. If forced induction is used the turbo / super charger must comply with **Art.9.4.o above.**

t. The **Vehicle** may not be used in competition until the **Competition Car Log Book / Vehicle Passport** has been validated by the **ASN** and returned to the **Vehicle** owner.

9.5. Except for **Classes A** (**Art.9.1a**) and **B** (**Art.9.1b**) modifications are free within **Vehicle Regulations.**

9.6. **Class A** (**Art.9.1a**) **Vehicles** must comply with the following requirements:

a. The complete body shell, doors, boot or tailgate must be in production material, with no modification or lightening. Windscreens must comply with **Art.14.5–14.10 below.**

b. No torque biasing, locked differentials or traction control devices are permitted.

c. Interior trim and lights may be removed but standard dashboards must be retained. Additional instruments may be fitted.

d. All seats apart from the **Driver's** may be removed but the specification of the **Driver's** seat may be changed.

e. Wheel sizes are free.

f. Wheel spacers are not permitted.

g. Suspension operation must be as manufacturer's specification.

h. No four-wheel drive system is permitted.

i. The engine block (which may be bored out) must be standard for the model of **Vehicle** with standard inlet and exhaust manifold. There can be a maximum of two chokes unless the **Vehicle** is fitted as standard with more than two chokes. Fuel injection is permitted if standard on the model.

j. A roll-over bar or roll cage may be fitted.

k. The manufacturer's original gearbox and axle with all internals as originally supplied for that model of **Vehicle** must be retained and in their original positions.

l. **Vehicles** need not be taxed or insured

9.7. **Class B** (**Art.9.1b**) **Road Rally Cars** must be taxed and comply with **Arts.10–15.4** **Stage Rally Cars** must comply with **Art.9.3** and **Art.9.4** and **Art.16** **Stage** cars need not be taxed but for either a **Road** or **Stage Rally Car**, a current MoT, where appropriate, must be produced if applicable. Any forward-facing lights must comply with **Art.6.2.** Tyres must comply with **Art.21.**

10. Road Rally Cars

10.1. The **Vehicle** must be currently registered and taxed as a Private **Car** and comply with all statutory regulations as to the **Construction** and Use regulations (especially regarding brakes lighting tyres warning devices rear view mirrors silencers speedometers wings and windscreens).

10.2. In this section the term MODEL refers to all variants of the same family of cars. In addition to complying

with Ch.7 (**Competitors Vehicles and Vehicle Safety Equipment**) and to the extent relevant Ch.8 **(Fuel and Tyres and Testing**). All **Vehicles** competing in **Road Rallies** must comply with the appropriate part of the following:

11. Body

11.1. **Bodywork** must represent the manufacturer's original profile and may include any optional extras available directly from the manufacturer.

11.2. Bumpers must be fitted.

11.3. Paintwork must be one colour or manufacturer's original colour scheme. No primer is to be visible.

11.4. **Vehicles** must not have wheel arch extensions unless fitted by the manufacturer as a standard item to the body shape.

11.5. All major internal trim as fitted to the body type by its original manufacturer when offering it for sale must be retained. Major internal trim includes headlining, inside door panels (which may be replaced with representative material) for all doors and / or rear side panels alongside the rear seat (for a 2 door car), carpets and rear seats. It does not include parcel shelves, boot carpet or boot side trims.

11.6. Front seats may be improved or replaced.

11.7. The trim including the rear seat may be cut to allow the fitting of a safety cage.

11.8. If equipped with a non-standard fuel tank it must be separated from the **Driver / Passenger** compartment by a protective bulkhead of non-flammable material preventing the passage of fluid or flame.

11.9. Full harness seat belts may be fitted.

11.10. Guards may be fitted beneath the vehicle to provide protection from damage.

12. Engines and Transmissions

12.1. **Vehicle** engines must have:

a. A maximum of four cylinders.

b. A maximum of two carburettor chokes (two single or one double).

c. A maximum of one camshaft per bank of cylinders.

12.2. Engines with more than one camshaft per bank of cylinders may be used providing that:

a. Any replacement engine comprises a block and cylinder head from the same engine family.

b. they were originally fitted with fuel injection and

c. that the fuel injection system complete with inlet manifold and throttle body is retained unmodified except as permitted in **Art.12.3.c below.**

12.3. In respect of **Art.12.3.b above** it is permitted to make the following modifications to effect installation:

a. Alternative engine mountings, sump pan and exhaust manifolds.

b. Relocation of ancillaries such as alternators and steering pumps.

c. To change the orientation of the otherwise unmodified inlet manifold.

12.4. For diesel and petrol engines under 1500cc actual capacity forced induction is permitted providing that the complete original induction system is retained unmodified other than the replacement of the air filter element.

12.5. Fuel injection may be fitted where it was standard equipment by the manufacturer for that engine type and where the original plenum chamber and throttle body is retained for that engine type.

12.6. A standard Wankel unit will be considered as three cylinders. Twin Wankel units are prohibited.

12.7. Engines must comply with the silencing **Noise levels** and have induction air filter elements fitted that ensure the vehicle complies with noise regulations.

12.8. Only H shift pattern manual transmissions are permitted. The gear lever must remain the only means of changing gear unless an alternative method was originally fitted by the vehicle manufacturer as standard. Automatic transmissions are permitted provided that they are in their original configuration as fitted by the manufacturer to that specific **Vehicle** model.

12.9. The number and location of the driven wheels must remain as original to the model of **Vehicle.**

13. Wheels and Tyres

13.1. Wheels and tyre sizes are free but must fit within the standard unmodified wheel arch.

13.2. **Vehicles** must be fitted with tyres that are always legal for use on the **Public Highway.**

13.3. Tyres must comply with **Ch.8 App.4 Arts.2–3.**

13.4. **Vehicles** must have all spare wheels securely fastened in position and must not be fitted with spiked or studded tyres or any non-skid attachments, other than chains if permitted by the **Official Documents**.

14. Electrical Systems

14.1. **Vehicles** must have a maximum of four forward facing beams as well as side and indicator lights, unless further restrictions are specified in the **Official Documents.**

14.2. Light pods are not permitted.

14.3. A headlamp must provide the main beam and dipped beam functions.

14.4. An auxiliary lamp provides a beam other than that provided by the headlamp. With the exception of **Vehicles** built before 31st December 1946 the maximum width of the lamp body of any auxiliary lamp must not exceed 222mm.

14.5. A headlamp may consist of a single reflector with a dual filament bulb, or separate reflectors each with single filament bulbs providing the functions of main beam and dipped beam separately. This will be considered as equivalent to a single dual filament headlamp unit. Lamp units comprising two reflectors where one is fitted with a dual filament bulb will be considered as a combined headlamp and auxiliary lamp. In this instance therefore no additional auxiliary lamps may be fitted.

14.6. Auxiliary lamps unless fitted as standard equipment using gas discharge or LED technology are not permitted and gas discharge or LED headlamp units may not be retro fitted.

14.7. Auxiliary lights must not be used in neutral sections except in poor visibility as permitted by law.

14.8. Where more than four beams are fitted as standard, only four may be used and the remainder must be rendered unusable for the duration of the event.

14.9. **Vehicles** must have all lights fitted and used according to motor vehicle lighting regulations.

14.10. External navigational or **Marshal** lights are not permitted.

14.11. For **Events** taking place wholly between half an hour before sunrise and half an hour after sunset **Arts.14.1, 14.8** and **14.10** do not apply.

15. Miscellaneous

15.1. **Vehicles** may not use racing style numbers, nor have any advertising except for event sponsor decals which must be incorporated within the rally plate.

15.2. They should be equipped with an effective method of stopping fuel supply, operable by the **Driver** when normally seated (the ignition switch would normally cover this requirement) and must use **Permitted Fuel** as defined in **Ch.1 App.1**.

15.3. Brakes are free but must comply with **Construction** and Use Regulations. A hydraulic handbrake is permitted where a functioning mechanical system is also present. The hydraulic handbrake lever shall operate in an arc not exceeding 50 degrees from the horizontal.

15.4. **Vehicles** must display registration plates in compliance with the current Road Vehicles (Display of Registration Marks) **Regulation**s

16. Stage Rally Cars

16.1. **Stage Rally Cars** must comply with **Arts.9.3–9.4** and the following:

16.2. **Stage Rally Cars** with a CCLB / VP issued before 1st January 2009, and which complied with H265 or H266 of the 2008 regulations, must comply with **Arts.16.2.a – p. below** from 1st January 2012. CCLBs / VPs for these vehicles remain valid until such time as the vehicle requires a full re-inspection following rebuilding, but may be returned to **Motor**sport UK for updating ownership, colour and other minor details:

a. All cars must comply with **Ch.7** of these regulations, and all statutory regulations concerning the construction and use of vehicles. In addition **Vehicles** must:

b. Be currently registered and taxed as a private car, unless specific event regulations relax the requirement for taxation, by virtue of the entire event taking place wholly on private property.

c. Have registration documents and, where a car is required by law to have a certificate, a valid MOT Certificate where appropriate. These documents must be produced at scrutineering for all events, irrespective of whether or not part of the event takes place on the **Public Highway**.

d. Have a valid **ASN Competition Car Log Book/Vehicle Passport** that must be produced at scrutineering (**Ch.7 App.1** and **App.12**).

e. Display registration plates in compliance with the current **Road Vehicles** (Display of Registration Marks) **Regulation**s.

f. All **Vehicles** must carry a small spill kit complying with **Ch.7 App.2 Art.22.15.**

g. Have a bulkhead between any fuel tank and filler and driver/passenger compartment sufficient to prevent the passage of flame or liquid. Where a fuel tank constitutes part of a bulkhead between passenger and luggage compartment, an additional bulkhead must be fitted. Additional fuel tank protection may be required.

h. Glass sunroofs are not permitted. Sunroofs may be of a non-shattering solid rigid material other than glass. Any sunroof must be firmly secured in the closed position. The sunroof aperture may be closed by solid material permanently fitted in place.

i. Windscreens to be of laminated type only.

j. Where advertising is allowed on windscreens it must not obscure the driver's vision nor cover more than one third of the depth of the visual area of the windscreen.

k. Towing eyes of adequate strength and size must be fitted to, or carried for fitting to, the front and rear of the vehicle. They must be painted a distinctive and contrasting colour

l. Forced Induction engines must be fitted with a restrictor at a maximum of 50mm from the extremes of the compressor blades. The restrictor orifice to be to the dimensions currently in force in **FIA** Appendix 'J'. Where there are two forms of forced induction fitted, the restrictor must not exceed the appropriate **FIA** Appendix 'J' dimensions. Provision must be made for fitting seals to the unit(s). A fee if £3.00 is payable for the sealing of turbo chargers.

m. Not be fitted with spiked or studded tyres or any non-skid attachments, other than chains if permitted in the **Official Documents.**

n. Braking systems may be modified including fitment of uprated components, conversion of drum brakes to disc brakes and use of alternative friction materials.

o. If the filler cap is of the quick release type or where the vehicle has been fitted with a non-standard filler, be fitted with a recessed fuel filler cap.

p. There are restrictions concerning the use of auxilary lights which are detailed in the sporting regulations.

16.3. Have, as a minimum, a ROPS complying with Ch.7 App.3, Ch.7 App.13 Diagram 14 or 15 and longitudinal door bars complying with Ch.7 App.3 Art.12 (side sections Ch.7 App.13 Diagram 18). For **Vehicles** not issued with a **Vehicle Passport** or **Competition Car Log Book** prior to 1st January 2019 – and of a make and model with a conception date post 31.12.2005 – the following additional members are mandatory:

a. Roof Reinforcement complying with Ch.7 App.3 Art.13.1 and Ch.7 App.13 Diagram 19 a., b., c., or d.

b. Windscreen Pillar Reinforcement complying with Ch.7 App.3 Art.15.1–15.2 on each side if Ch.7 App.13 Diagram 69 dimension "A" is greater than 200mm.

16.4. Be equipped with an internal switch that is capable of isolating all electrical circuits and completely stopping the engine. The operating switch must be positioned so that it can be operated by the driver and the co-driver when normally seated with seat belts fastened.

16.5. Be equipped with an external circuit breaker complying with Ch.7 App.5 Art.5.

16.6. Have currently **FIA** Homologated seat belts complying with Ch.7 App.7 Art.7, Art.8 or Art.9 (four, five or six point).

16.7. Be equipped with fire extinguishers complying with Ch.7 App.6 Art.1, 3 and 4. The driver and co-driver must each be able to activate the extinguisher when normally seated with seat belts fastened.

16.8. Be fitted with front seats that were **FIA** homologated to **FIA Standard** 8855-1999, 8862-2009 or 8855-2001 at the time of manufacture (but excluding seats for which the **FIA** homologation was withdrawn) complying with Ch.7 App.7 Art.2.1. For **National Events FIA** homologated seats manufactured to **FIA Standard** 8855-1999 or 8855-2001 may be used for up to two years beyond the expiration of the original homologation label validity. **FIA** homologated seats manufactured to **FIA Standard** 8862- 2009 may be used until 31st December of the year stated on the label.

16.9. Have substantial underbody protection covering any area of a fuel tank exposed to running damage.

16.10. Be equipped with high-intensity horns that can be operated by the driver and the co-driver.

16.11. If a camera is carried, the fitting must be specifically approved by a **Scrutineer.**

16.12. Belt cutter(s) must be carried on board at all times. Both driver and co-driver must be able to reach a belt cutter when seated with their harness fastened.

17. Body (including Aerodynamics)

17.1. **Car**s must be fitted with a laminated glass or polycarbonate windscreen or have a 2.5cm matrix wire mesh fitted over the whole of the windscreen aperture. If fitted with a glass or polycarbonate windscreen, the **Vehicle** must have an operative wiper / washer system. Where windscreens are removed, rear windows must also be removed. For open **Vehicles**, approved goggles / visors must be worn at all times.

17.2. If fitted with non-standard or lightened doors **Vehicles** must have an internal horizontal safety bar across each door aperture below the line of the window and at a suitable height to protect the **Driver**. This must not be integral with the door.

17.3. Any cover over the **Passenger's** compartment alongside the **Driver** must be made of foldable material except where the **Driver / Passenger** compartment is separated by a stress-bearing solid **Chassis** member as part of the original design.

17.4. With the exception of **Vehicles** in **Class D** any **Vehicle's** silhouette viewed inside elevation must remain unaltered above the wheel hub centres of the original **Vehicle** except for the engine bonnet / cover the shape of which can be altered.

17.5. In **Class C** the following are permitted to reduce weight:

a. One-piece lightweight bonnet wing assemblies, providing adequate bracing is provided to replace lost strength

b. Lightweight engine bonnet covers, boot lids and doors

c. All non-stress-bearing internal components may be removed

17.6. **Cars** more extensively lightened than indicated above must be fitted with full roll-over bars to requirements of **Ch.7 App.3 Arts.22–23**.

18. Engine

18.1. See **Ch.7 App.2 Arts.8.2–8.4.**

19. Brakes

19.1. Brakes must comply with Statutory **Requirements** as to the **Construction of Motor Vehicles.**

19.2. If there is no mechanical system available for braking on at least two wheels, two hydraulic systems are required so that in event of failure of one braking can be maintained on at least two wheels.

19.3. **Vehicles** constructed after 1930 must have brakes on all wheels.

19.4. When tested immediately prior to an **Event** the braking system on all **Vehicles** must work without impairing the **Driver's** control.

19.5. It must be possible under all conditions, running or stationary, for 25% minimum braking effort to be applied by the **Driver** through the braking system to each axle.

19.6. Brake balance adjusters must not be available for adjustment during running if they contravene **Art.19.5 above.**

20. Wheels

20.1. Any spare wheel must be securely fastened in position (a spare need not be carried unless specified in the **Official** Documents).

21. Tyres

21.1. Only tyres for use on the **Public Highway** by **Vehicles** or light commercial **Vehicles** are permitted. Slicks or any tyres that have been wholly or partly hand-cut are not allowed unless the **Official Documents** state otherwise.

22. Transmission

22.1. If fitted with front wheel drive, **Vehicles** must have an effective differential action between the driving wheels. Reverse gear is optional in **Autocross Specials (Class D).**

23. Oil Systems

23.1. In rear-engined **Vehicle** no part of the oil tank may be located to the rear of the gearbox casing.

24. Electrical Systems

24.1. It is permitted to remove all lamps. **Vehicles** in **Classes C** & **D** and all other **Vehicles** where the standard rear lights are removed or not functional must be equipped with two rear red warning lights with a minimum of 21W (or LED equivalent) each and an illuminated area of 60 sq cm. These must work with or replace the **Vehicle** brake light system at all times, must be between 600mm and 1500mm above the ground and must be clearly visible from behind. The fitting of generators is optional.

25. Silencing

25.1. **Vehicles** must comply with silencing levels in **Ch.7 App.8 Art.2.**

26. Safety

26.1. **Safety** Criteria, **Ch.7 App.7 Art.6** three point and **Ch.7 Art.6 Arts.1.5–1.6** (not necessarily plumbed in) are mandatory. **Ch.7 App.3 Arts.22–23**, **Ch.7 App.7 Art.7** and **Ch.7 App.5 Arts.5** are strongly recommended.

27. Clubcross Vehicles

27.1. Only the following categories of **Vehicle** are allowed to compete in **Clubcross Events.** They must comply with the following:

a. **Category 'A' Economy "Standard" Production Saloons**. **Car**s must comply with **Art.9.6 above** and the following:

i. **Maximum** engine capacity: 2000cc
ii. Forced Induction is prohibited
iii. Four Wheel Drive is prohibited
iv. Tyres must comply with **Art.27.1.e. below.**

b. **Category 'B' Road Saloon Cars**:

i. **Maximum** engine capacity: 2000cc
ii. Forced Induction is prohibited
iii. Four Wheel Drive is prohibited
iv. Tyres must comply with **Art.27.1.e. below.**

c. **Category 'C' Minicross Cars:**

i. **Car**s must comply with Minicross Regulations
ii. Tyres must comply with **Art.27.1.e. below.**

d. **Category 'D' Stock Hatch Cars:**

i. **Vehicles** must comply with Stock **Rallycross Hatch Rallycross Regulations**
ii. **Maximum** engine capacity 1600cc
iii. Tyres must comply with **Art.27.1.e. below.**

e. Only highway pattern tyres are permitted (ie not off-road, on / off-road or winter pattern).

28. Junior Autocross Vehicles

28.1. The only category of **Vehicle** permitted in Junior **Autocross Event**s are those complying with the following:

a. The engine must be naturally aspirated and must not have a capacity exceeding 1400cc.

b. Must be production **Vehicles**, front or rear wheel drive with standard unmodified engine in original position.

c. Must run induction systems, inlet manifolds and exhaust systems which are standard to the **Vehicle.**

d. Performance air filters and exhaust back boxes are permitted, but turbochargers or superchargers are not.

e. The dashboard is to remain as standard and in the original position, additional instruments may be fitted. All other interior trim may be removed. The **Driver's** seat must be a **Competition Seat** compatible with the requirements of **Art.28.1.k below.**

f. Wheels are free.

g. Suspension is free but must use standard pick up points and locations.

h. **Standard** gearbox and differential applicable to the **Vehicle** must be used.

i. Modification or relocation of the petrol tank is free.

j. The silhouette of the **Vehicle** must not be altered.

k. Seat belts fitted in accordance with Ch.7 App.7 Art.7 Four point (currently **FIA** homologated and with four separate fixing points) as a minimum are mandatory.

l. Must have no body kits, space framing or alterations, fibreglass or alloy panels to make the **Vehicle** lighter.

m. The windscreen may be of either laminated glass or plastic of the required thickness. No apertures will be permitted in windscreens. If fitted with a glass or plastic windscreen (Ch.7 App.2 Arts.22.7–22.8, the **Vehicle** must have an operative wiper / washer system. It is permitted to replace all other windows with plastic of the required thickness.

n. Ch.7 App.3 Arts.22–23, Ch.7 App.13 Diagram 14 or 15 is mandatory.

CHAPTER 16 AUTOCROSS AND RALLYCROSS AND OFF-ROAD RACING

PART B (RALLYCROSS)

Appendix 6 - Organisers Regulations

1. General

1.1. **Permits** for **Rallycross Events** and **Championships** are issued at the sole discretion of the **ASN** and on condition that:

a. **Venues** must have a valid **Track Licence** for **Rallycross** and its conditions are fulfilled (Ch.10 App.1 Art.1).

b. A **Club** will only be allowed to organise **Events** of up to **Interclub** status unless the **ASN** has specifically approved an application for higher status.

c. The **Clerk of the Course** for a **Rallycross Event** must hold a valid **ASN Licence.**

d. ASN Timekeepers and Scrutineers appropriate to the grade of Event have been appointed.

e. For **Interclub** and above status **Permitted Events** only, for venues authorised by the issued **Track Licence** to include **Joker Laps**, the Joker Lap may be used. Two **Judges of Fact** must be appointed to oversee its use and in each qualifying heat and final, one of the laps must be the **Joker Lap.**

1.2. A **Permit** will not be issued for International status unless the Club possesses a fulltime Secretariat capable of taking full responsibility for the Event. The application must be specifically approved by the **ASN** prior to submission to the **FIA**.

1.3. No racing or Practice may take place until:

a. The **Chief Medical Officer** has reported to the Senior **Clerk of the Course** that the necessary Doctors/Paramedics mobile ambulance vehicles and first aid personnel are present and have been briefed. If no ambulance or suitable substitute **Vehicle** is available at the **Event** the **Competition** or Practice must be suspended (Chapter 11).

b. The Stewards of the Event have seen the Fire Equipment Certificate referred to in Ch.10 App.4 Art.3.

c. The **Clerk of the Course** has reported to the Stewards of the **Event** that the conditions of the Permit and **Track** Licence are fulfilled. Before making such a report the **Clerk of the Course** or a Deputy appointed by the **Clerk of the Course** specifically for such purpose shall inspect the course and its installations.

d. The **Clerk of the Course** is sure that breakdown vehicles are present in sufficient number to cope with any incidents which may be expected having regard to the type of course and number of **Competitors**.

e. The **Clerk of the Course** is satisfied that the licensed Rescue Vehicle(s) are positioned in accordance with the Track Licence.

f. The **Clerk of the Course** is satisfied that the **Competitors** for the relevant session have Signed On.

1.4. The Course or its features or markings may only be changed between the last Practicing period and the Race(s) in exceptional circumstances and with the approval of the **ASN** Head of Safety.

1.5. The **Clerk of the Course** in consultation with the Stewards of the Event may arrange an additional scheduled Practice.

1.6. All **Competitors** and **Officials** must Sign On at all **Events** they participate in.

1.7. **Competitors** must produce the necessary credentials of personal and **Vehicle** eligibility at all times on demand of the **Officials** of the **Event**.

1.8. Competitors must have the correct grade of **Licence** for the **Event** and the **Vehicle** being driven.

1.9. All competing **Vehicles** and / or **Competitor** Personal Safety Equipment (Chapter 9) must be presented

for scrutiny on command of the **Officials** of the **Event** including any specific arrangements for safety and / or eligibility **Scrutineering** mandated by the **Official Documents** and / or any conditions of Entry and Signing On.

1.10. Any false declaration by a **Competitor** in relation to the eligibility of a competing **Vehicle** and / or any **Competitor** Personal Safety Equipment must be reported to the **Clerk of the Course** and to the **ASN** by the **ASN Steward** of the **Event** (where applicable).

1.11. **Vehicles** approved by the Scrutineers shall be issued with a Scrutineering Label to be placed in / on the Vehicle in a location visible to an **Official**.

1.12. **Organisers** must provide a designated area for **Vehicle** scrutiny and ensure that suitable secure facilities exist for the retention of **Vehicles** involved in **Serious Incidents**.

1.13. Medical facilities and / or arrangement including suitable Rescue Vehicles must be provided in accordance with **App.5 to this Chapter** and **Chapter 11**.

1.14. Prior to Practicing and / or qualifying for the **Competition** at the **Event** a Driver who has not raced at the **Circuit** in the configuration being used for the **Competition** must report to the **Clerk of the Course** or a Deputy who will specifically brief the **Driver** before they start Practice.

1.15. Unless authorisation has been granted by the **ASN** there shall be no session which combines **Vehicles** with exposed wheels with closed **Vehicles** (i.e. saloons etc)

2. Joker Lap

2.1. Characteristics:

a. Length: must be such that the time needed to cover a lap is at least 2 seconds longer than the best lap time achieved by a **Super Car.**

b. Width: minimum 10 m, maximum 12 m.

c. The entry and the exit cannot be on the racing line.

d. Safety protection to separate the two roads must be in place. At the exit it must be possible for the **Vehicles** to be driving at the same speed as on the traditional **Circuit.**

e. A **Marshal Post** will be put in place if judged necessary for safety reasons.

2.2. The **Driver** must enter or leave the **Joker Lap** section in such a way that does not constitute a danger or hinder other **Drivers.** At the exit of the **Joker Lap** section the **Vehicles** on the main track have priority.

2.3. Those **Drivers** who do not take the **Joker Lap**:

a. In a **Heat** will receive a time penalty of 30 seconds. The penalty for **Drivers** who take it more than once will be decided by the **Clerk of the Course.**

b. In a **Final** or who take it more than once will be classified last in that **Final** before the non-starters (except **Art.7.9 below**). If this concerns more than one **Driver** they will be classified in the order of their respective positions on the starting grid before the non-starters.

3. Scrutineering

3.1. No **Vehicle** may be driven in the **Event** until it has been approved by an **ASN Scrutineer** at the **Event.**

3.2. **Vehicles** must be presented for scrutineering at the time specified in the **Official Documents** with any previous **Scrutineering Labels** removed. Homologation papers and Vehicle Passports must be presented when appropriate.

3.3. Any Competitor not reporting as instructed may be fined, **Disqualified** or may forfeit any claim to a favourable starting position.

3.4. **Classes** must be specified in the **Official Documents**.

3.5. **Vehicles** being used must comply with **Technical Regulations** in **App.9. Art.1** and **App.9 Art.12.11.c.**

3.6. If after approval any **Vehicle** is dismantled or modified or is involved in an incident, in a way which may affect its safety or eligibility or any aerodynamic device is added or removed it must be represented for approval. The **Entrant** is responsible for seeking fresh approval.

3.7. Any **Vehicle** involved in an incident from which it is unable to proceed must not be touched by anybody other than **Officials** without the specific approval of the **Clerk of the Course.** The **Driver** concerned may not drive again without the approval of the **Medical Officer** in charge.

3.8. No **Vehicle** taking part in the **Event** may be taken away from the Circuit before the final technical checks have been concluded and **Vehicles** released from **Parc Fermé** without the prior authority of the Chief Scrutineer who will report such to the **Clerk of the Course**.

4. Timing

4.1. The completion of the first and subsequent laps shall be timed when each **Vehicle** crosses the control line unless the **Official Documents** state otherwise.

4.2. At all times throughout the **Event** competing **Vehicles** shall be fitted with a working timing identification module (i.e transponder). This must be compliant with the Timekeeper's equipment. The module identification number should be submitted to the **Event** Secretary on the Entry form. It is the responsibility of the **Competitor** to ensure that the module is working and safely fitted in a suitable position on the **Vehicle**. Failure of the module may result in the competing **Vehicle** being untimed.

4.3. Where for whatever reason timing is carried out manually the timing of a **Vehicle** crossing a control line shall be taken at the moment when the centre of the leading wheel(s) pass(es) over that line.

4.4. Transponder only timing must not be to an accuracy of less than 0.01 seconds.

4.5. Transponders must be from the **ASN** approved list and used in conjunction with decoders certified in accordance with **Ch.5 App.18 Chart.6.**

4.6. The fitment of the transponder must be in accordance with the manufacturer's instructions at a predetermined position on the **Vehicle** as detailed in the **Official Documents**.

5. Heats

5.1. A **Competition** may be run in Heats the composition of which and of the Final will be determined by the **Organisers** and published in the **Official Documents**. The composition of the Heats may be modified or heats consolidated only by the **Clerk of the Course** after consultation with the **Championship Co-ordinator** if appropriate.

5.2. Starting positions in the Final will be determined by the finishing times recorded in each Heat unless the **Official Documents** specify otherwise.

5.3. A **Competitor** may not change the **Vehicle** after initial Scrutineering.

6. Drivers

6.1. Only the **Driver** may be in a **Vehicle** during the **Competition** or **Practice.**

6.2. **Rallycross Drivers** must conform to the **Medical Requirements** specified in **Ch.6.**

6.3. **Vehicles** will be identified by **Competition Numbers** allocated by the **Organisers** and displayed as specified in the **Technical Regulations** **Ch.7 App.10** or in line with the following:

a. The **Organisers** may, in addition to the number format provided in **Ch.7 App.10,** also permit **Competition Numbers** to be moved to the rear side windows (above the **Drivers**' name) on the **Vehicle** in which case.

b. The numbers for each rear side window shall be:

i. a minimum of 200mm high

ii. with a stroke width of at least 20mm

iii. coloured reflective yellow.

The colour may be varied for different **Categories.**

c. In addition the windscreen of these **Vehicles** must display the **Competition Number** positioned on the upper area of the **Passenger's** side of the windscreen as follows:

i. the numerals must be at least 150mm high

ii. be in the same colour and font as those displayed on the rear side windows

iii. be placed no closer than 50mm from the lower edge of the windscreen "sun-strip" and 50mm from the side edge of the windscreen.

The colour may be varied for different **Categories.**

6.3.1 The use of "0" or "00" is prohibited unless preceded by any number 1 to 9.

6.3.2 The numbers shall be in position before the vehicle is presented for scrutiny and will be subject to approval as to position, legibility and size. Modifications may be required as a result of observations during practice.

6.3.3 The **Chief Timekeeper** may decline to record the performance of any vehicle whose competition numbers are not readily apparent to the lap recorders.

6.3.4. On any car driven by a person who has not received six car **Race/Rallycross** signatures on their **Interclub Licence**, there shall be on the back of the car a yellow square, 7in x 7in, with a black diagonal cross, with strokes 6in long and 1in wide.

6.4. **ASN** or **FIA Competition Car Log Books (CCLB) / Vehicle Passports** are required at all **Rallycross Events.** Any **ASN Competition Car Log Book** issued prior to 31st December 2016 is now invalid.

6.5. **Vehicles** will be permitted to carry radio transmitters or receivers where the **Official Documents** allow, and only for the following:

a. for **National** and above status **Permitted Events**

b. for any **Junior Category** only a non-transmitting radio receiver tuned to the frequency of a single transmitting device which is under the direct and sole control of the **Clerk of the Course** is permitted. The system is to be used solely for providing **Competitors** with instructions or warnings issued by the **Clerk of the Course.**

Where required Ofcom licences must be in place.

7. Practice and Starts

7.1. Every **Driver** including Drivers of Vehicles which are to give performance demonstrations must be given the opportunity of practicing in conditions similar to those to be expected in the **Competition** and must be allowed three practice laps.

7.2. Any **Driver** who has not previously competed over the **Course** within the preceding four weeks must complete at least one observed practice lap in the **Vehicle** to be raced.

7.3. The **Official Documents** must specify:

a. the starting signal;

b. the timing method;

c. when timing commences;

d. the method of allocating starting positions, and

e. the maximum number of starters in each race.

7.4. **Vehicles** will be started from a Standing Start and the Finish line must be clearly indicated.

a. **Standing start:** A standing start occurs when the Vehicles are stationary on their appropriate grid positions with engines running when the starting **Signal** is given. Timing shall commence when the starting **Signal** is given. The starting line is the line in relation to which the position of each Vehicle is fixed prior to the start.

b. Electronic beams or similar devices may be used in conjunction with starting lights to detect false starts. These will be monitored by a **Judge of Fact**.

7.5. The **Start Grid** shall be notified at least 30 minutes before the start except when the finishing order in one Event affects the starting positions in a subsequent **Event** scheduled to start less than half an hour later. In such instance the starting positions shall be notified as soon as practicable.

a. The **Start Grid** will be displayed on the Official Notice Board

b. Any appeal concerning starting positions must be lodged within 30 minutes of their notification. Where the exception given in b. above. applies any appeal must be lodged not less than 10 minutes before the subsequent start.

c. Each Vehicle will be allocated its pre-determined position on a starting grid and will be aligned in the correct position by the start marshal.

7.6. It is not permitted to change tyres between leaving the paddock and the start of the race except in the case of **Force Majeure** (puncture or obvious damage) or with authority of the **Clerk of the Course**. No artificial tyre heating or heat retaining devices may be used during this period.

7.7. The spinning of wheels (tyre cleaning) before the start is only permitted in the designated area clearly defined on the **Track** licence and should be under supervision of the start Marshals. It cannot be performed when a Marshal or any other person is standing in front of or behind the Vehicle.

7.8. Any **Driver** in position on the grid but unable to take part in the start shall indicate that predicament by raising an arm vertically and/or opening the door. Marshals should warn other Drivers by means of a Yellow **Signal**.

7.9. A false start occurs when a **Driver** under Starter's orders is either:

a. in an incorrect position on the grid or

b. forward from the prescribed position or

c. moving at the time that the red lights are extinguished.

7.10. **Judges of Fact** may be appointed to adjudicate on:

a. False starts.

b. Not following correct course, or touching a marker.

c. Baulking or contact (Ch.5B App.6).

d. Noise.

e. Joker Lap (Art.2)

8. Signals

8.1. **Signals** may be used as appropriate in accordance with Art.9.6 and 9.7 below.

8.2. A **Yellow Signal** gives warning of an incident and prohibits overtaking until the incident is passed.

8.3. **Officials' Signals** will be conveyed to **Drivers** and may be displayed either by flags and or by an appropriately coloured light panel to which the **Competitor** number may be attached.

8.4. A ‘static flag’ may be replaced by a coloured light **Signa**l and a ‘waved flag’ may be replaced by a flashing coloured light **Signal**:

a. Red / Green lights or **National Flag:** Race start.

b. Yellow – ‘Waved’: Danger slow down sufficiently to ensure that full control of the **Vehicle** can be retained. No overtaking.

c. Red: Immediately cease driving at racing speed and proceed slowly without overtaking and with maximum caution to pits or start line obeying **Marshal’s** instructions and or Light Signals and being prepared to stop should the **Track** be blocked.

d. Black and White Rectangular split diagonally and displayed with the **Competitor’s** number: A warning to the **Driver** that their driving conduct is suspect and they may be shown a black **Signal** on further reports.

e. Black displayed with the **Competitor’s** number: The **Driver** must stop at their pit on the next lap of receiving the **Signal** and report to the **Clerk of the Course**. A penalty of **Disqualification** may be enforced by display of the **Black Signal**.

f. Black and White Chequered - End of **Race** or **Practice**.

8.5. The **Clerk of the Course** shall have under their direct control:

a. a **Red Signal**

b. a **Black Signal**

c. a **Black and White Signal** split diagonally and

d. The means for clearly displaying a competing **Vehicle** number in the case of d. and e. above. Where available a digital board will display these messages to the **Driver**.

8.6. If a hazard has been indicated by **Yellow Signals** as above the **Signals** may be withdrawn even though the hazard remains. It is the **Competitor’s** responsibility to take appropriate care.

8.7. Once the Black and White chequered Signal has been displayed the Competition is over and may not be restarted (see **Art. 8.9**).

8.8. Any race can be stopped at the sole discretion of the **Clerk of the Course** by ‘waving’ the **Red Signal** at the **Start** / **Finish Line**. **Competitors** will be warned that the race has been stopped by the simultaneous ‘waving’ of the **Red Signal** at all **Flag Marshalling Posts.**

8.9. Re-runs will only be permitted at the discretion of the **Clerk of the Course** and:

a. when a **Red Signal** has been shown during a **Heat** or **Final**; and / or

b. when the end-of-race **Signal** is displayed inadvertently or otherwise before the leading **Vehicle** completes the scheduled number of laps.

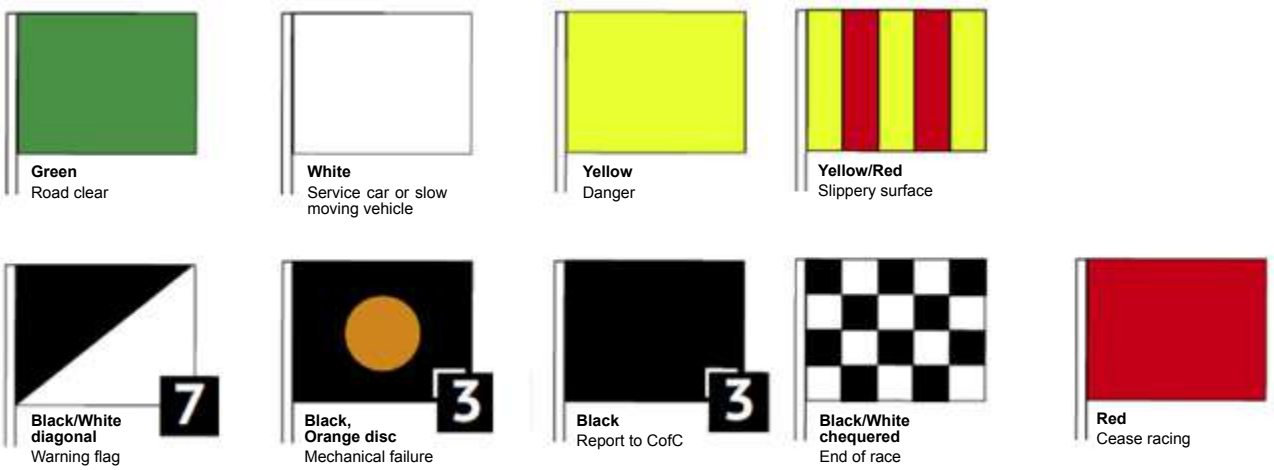

8.10. Only the participants in the first start are entitled to participate in the re-run and must occupy the same place as for the previous start. In this case any possible warnings or penalties will however apply for the re-run.

8.11. Where a **Driver** in a **Heat** or **Final** causes a re-run the **Driver** concerned may be **Disqualified** from the results.

8.12. All other incidents will be treated as "**Force Majeure**".

8.13. If a **Heat** or **Final** is stopped by a **Red Signal** and subsequently restarted any **Driver** who started in the original **Heat** or **Final** but who is not able to start in the re-run will be classified in front of any **Drivers** who did not start at all.

8.14. If not restarted the result will be based on the order of crossing the **Finish Line** at one lap less than at the time of the first showing of the **Red Signal.**

8.15. No work may be carried out on the grid unless on grounds of safety and only with the approval of the **Scrutineer**.

8.16. The **Clerk of the Course** may order that the duration of the second part or re-run of any race shall be of a shorter distance than originally scheduled or may be abandoned altogether.

8.17. If no **Vehicles** are running under their own power the **Clerk of the Course** may order the end of race **Signal** to be displayed. The results will be declared on the relative positions of **Vehicles** at the time they last crossed the **Finish Line** under their own power.

8.18. Any race stopped before the leader has completed one lap will be declared a “No Contest” and available **Vehicles** will restart from their original grid positions.

9. Track Regulations

9.1. **Drivers** must use the **Track** at all times and may not leave the **Track** without a justifiable reason.

9.2. Any driver intending to leave the course shall signal their intention in good time and shall satisfy themselves that it is safe to do so.

9.3. The white lines, tyre stacks, marker poles or other devices identified by the **Clerk of the Course** during the briefing defining the track edges are considered to be part of the **Track**. The **Clerk of the Course** will identify during the **Drivers Briefing** and in written form the specific areas to be judged.

9.4. A **Driver** will be judged to have left the **Track** if two wheels of the **Vehicle** go beyond the outer edge of any kerb, the white line or **Track** markers or should the **Vehicle** pass behind or substantially move any physical marker where there is no kerb.

9.5. The driver of any Vehicle leaving the course because of being unable to maintain racing speed should signal the intention to do so in good time and is responsible for ensuring that the manoeuvre is carried out safely and as near as possible to a point of exit. No Vehicle able to proceed under its own power shall be stopped either on the course or the verges of the course but shall proceed to the paddock unless in doing so causes a hazard to other Competitors.

9.6. Overtaking according to the circumstances may be carried out either on the right or on the left. In response to each attempted overtaking manoeuvre no more than one change of direction to defend a position is permitted.

a. Any **Driver** moving back towards the racing line having earlier defended their position off-line should leave at least one **Vehicle** width between their own **Vehicle** and the edge of the **Track** on the approach to the corner.

b. Manoeuvres liable to hinder other **Drivers** such as deliberate crowding of a **Vehicle** beyond the edge of the **Track** or any other abnormal change of direction are strictly prohibited.

c. Any **Driver** who appears guilty of any of the above offences may be reported to the **Clerk of the Course.**

9.7. Should a **Vehicle** leave the **Track** for any reason and without prejudice to **Art.9.4 below** the **Driver** may re-join. However this may only be done when it is safe to do so and without gaining any advantage.

9.8. Causing a collision, repetition of serious mistakes or the appearance of a lack of control over the car (such as leaving the track) will be reported to the **Clerk of the Course** and may entail the imposition of penalties up to and including the **Disqualification** of any **Driver** concerned.

9.9. Pushing or other contact resulting in a lasting advantage is strictly prohibited.

9.10. It is not permitted to drive any **Vehicle** unnecessarily slowly, erratically or in a manner deemed to be potentially dangerous to other **Drivers** at any time.

9.11. Breaches of **Art.9.1 above** may be reported and / or determined only by:

a. A duly appointed **Judge of Fact** and/or

b. **Senior Officials** through the use of suitable equipment under the control of the **Organisers.**

9.12. Breaches of **Art.9.4 above** may be penalised following a report by a **Judge of Fact** using the following scale of penalties over the course of the **Event** and notified by issue of a **Clerks Decision** in each instance which will detail where the breach occurred:

1st breach – no penalty

2nd breach - warning

3rd breach – 5 second penalty added to session time

4th breach – 10 second penalty added to session time

5th breach – **Disqualification**

9.13. No competing **Vehicle** shall be driven in the reverse direction of the **Track** except for the minimum distance to remove it from an unexpected situation and then only under **Official** supervision.

10. Results

10.1. *The **Official Documents** will specify the method by which a winner is decided.

10.2. All Results at the **Event** including provisional and / or final Results shall be calculated in accordance with the Official Documents (see **Chapter 3 App.10**) following the application of any Penalties to Competitors.

10.3. Except for the several authorities vested in the ASN and the independent National Court under the NCR the Results of an Event shall remain Provisional Results until the final conclusion of any Appeals (see **Chapter 2**) affecting the Results of the Event.

10.4. Results that remain provisional under **Art.8.3** above shall only be declared and published by the **Organisers** as Final Results following the conclusion of all Judicial procedures including but not exclusively any **Appeals** arising from the **Event** (including **Appeals** against the Provisional Results).

10.5. Specific regulations regarding **Organisers** and the publication of Results are provided at **Chapter 3 App.6.**

10.6. After receiving the end of **Race** or **Practice** signal **Vehicles** must maintain station and proceed directly to **Parc Fermé** unless the **Official Documents** specify to the contrary.

10.7. The **Parc Fermé** area is defined in **Chapter 1 App.1** and all **Vehicles** must be taken directly to this area (including those who did not complete the **Practice** or **Race**) unless advised to the contrary by a Technical Official or by the **Clerk of the Course**. Only the **Driver** and **Officials** are granted access to **Parc Fermé** unless a **Competitor's** team member is requested by a Technical **Official** to be present.

10.8. **Organisers** are permitted to make specific provisions in the **Official Documents** relating to **Parc Fermé** including but not exclusively the admission of personnel and instructions and / or restrictions on data gathering including the recovery of Judicial or other moving images under the control of the **Organisers**.

10.9. Any publication of **Event** or **Championship** Results except by the **Organisers** shall be of no regulatory value.

CHAPTER 16 AUTOCROSS AND RALLYCROSS AND OFF-ROAD RACING

PART B (RALLYCROSS)

Appendix 7 - Medical and Rescue Requirements

1. Medical and Rescue Requirements

1.1. The minimum **Course** requirements (including at **Practice**) are as follows:

a. **Rallycross**: one **Doctor** or **ASN-Licensed Paramedic**, one ambulance and one licensed **Rescue Unit** crewed in accordance with **Ch.11 App.1 Art.5.1** must be in attendance and should be positioned as indicated on the Track Licence.

b. **Minicross**: one **Doctor** or **ASN-Licensed Paramedic**, one ambulance and either one licensed **Rescue Unit** with licensed crew, or one emergency vehicle equipped.

c. Where **Minicross** is organised within a **Rallycross Event**, the medical and rescue requirements stipulated for **Rallycross** also apply to the **Minicross Competition** within that **Event.**

d. Ambulances should be equipped with basic resuscitation equipment and if possible a **Casualty Immobiliser** for handling patients over difficult terrain. This essential equipment should not have to be taken from any rescue vehicles which must remain at all times fully operational on the **Course.** The ambulances must only be used in connection with casualties arising from the **Competition.**

e. The **Organisers** in conjunction with the **Chief Medical Officer** must ensure that during both **Practice** sessions and **Competition** adequate first aid staff are in attendance (eg. St John or St Andrew Ambulance, Red Cross etc).

2. Serious Incidents

2.1. All Serious Incidents must be reported to the ASN and managed in accordance with the published ASN Incident Pack and Protocols.

2.2. The ASN Stewards must ensure that the ASN Incident Pack is present with the Event Official Documentation available to the Clerk of the Course.

3. Incidents

3.1. The Clerk of the Course shall ensure that after every incident involving a competing Vehicle or Vehicles the following are informed:

a. The Chief Scrutineer: where mechanical failure is suspected, mechanical damage is substantial, or the completion of a serious incident form is necessary

b. The ASN Steward of the Event: where there is injury involving treatment beyond the capability of the Venue staff (see **Art.1**) or where judicial action is possible or has been taken

3.2. No Vehicle or Driver involved in a Serious Incident shall be permitted to continue in the Competition nor leave the Venue without the prior approval of the Chief Scrutineer or the Chief Medical Officer as the case may be. Full details of such approval must be provided to the Clerk of the Course and must be delivered in the Steward's Report to the ASN.

CHAPTER 16 AUTOCROSS AND RALLYCROSS AND OFF-ROAD RACING

PART B (RALLYCROSS)

Appendix 8 - Competitors Regulations

1. General

1.1. When signing on a **Competition Licence** valid for the **Event** must be produced (see Table in Ch.6) and at any other time at the request of the Event Officials.

1.2. **Competitors** must declare on their entry forms whether or not they have ever held a valid RTA licence.

1.3. **Competitors** aged 16 and above who have never held a valid RTA **Licence** must produce proof of having competed as a **Driver** in three **Minicross** or **Clubcross Events**, or three other **ASN-Permitted Events** (such as **Kart Racing**, **Autotests, Production Car Trials**, etc), or show proof of having completed an approved driving course at a **Race** or **Rally School** recognised by the **ASN**.

1.4. **Competitors** having reached the year of their 14th birthday may compete in Junior Rallycross and may continue until 31st December of the year of their 17th birthday:

a. For **Junior Rallycross** maximum grid size to be as per **Track Licence.**

b. New **Competitors** will have to drive observed laps prior to the **Competition** in order to satisfy the **Clerk of the Course** that they are competent to take part. **Vehicles** will start singly and run over three laps. Observed laps are not required if the **Competitor** can provide the **Clerk of the Course** with proof of having competed as a **Driver** in three other **ASN-Permitted Events** or having successfully completed an approved driving course at a **Race** or **Rally School** recognised by the **ASN**.

1.5. Any **Driver** competing in a **Vehicle** of 0.34bhp / kg or higher (excluding driver weight) and measured at the driven wheels must be the holder of an **RS National Licence** as a minimum.

1.6. For **Competitors** under the age of 18 years a **PG Entrant Licence** is required (Ch.6 App.3 Art.1.13 applies)

1.7. All Competitors must ensure that one fire extinguisher of at least 6kg of ABC type is available per **Vehicle** entered within their own area in the paddock.

1.8. All Competitors must ensure that a ground sheet (minimum dimensions 3 x 4m for each **Vehicle**) is spread on the ground in the paddock place reserved for them where work is to be done on their **Vehicle**, in order to prevent any pollution in case of an accidental leak, etc.

2. Licence Upgrading Criteria

2.1. **Rallycross**: See Ch.6 App.8**.**

3. Scrutineering

3.1. ***Vehicles** must be presented for scrutineering and practice at the times specified in the **Official Documents** with any previous **Scrutineering Labels** removed. **Classes** must be specified in the **Official Documents**. Any **Competitor** not reporting as instructed may be fined, **Disqualified** or may forfeit any claim to a favourable starting position.

3.2. **Vehicles** being used must comply with **Technical Regulations** App.9 to this Chapter.

3.3. If after approval any **Vehicle** is dismantled or modified or is involved in an accident in a way which may affect its safety or eligibility or any aerodynamic device is added or removed it must be represented for

approval. The **Entrant** is responsible for seeking fresh approval.

3.4. Any **Vehicle** involved in an incident from which it is unable to proceed must not be touched by anybody other than **Officials** without the specific approval of the **Clerk of the Course.** The **Driver** concerned may not drive again without the approval of the **Medical Officer** in charge.

3.5. No **Vehicle** may be driven in the **Event** until it has been approved by an **ASN Scrutineer** at the **Event**.

4. Drivers

4.1. Any **Driver** who has not previously competed over the **Course** within the preceding four weeks must complete at least one observed practice lap in the **Vehicle** to be raced. Only the **Driver** may be in a **Vehicle** during the **Competition** or **Practice.**

4.2. **Rallycross Drivers** must conform to the **Medical Requirements** specified in Ch.6 App.2.

4.3. **Vehicles** will be identified by **Competition Numbers** allocated by the **Organisers** and displayed as specified in the **Official Documents (**Ch.7 App.10**)** or in line with the following:

a. The numbers shall be in position before the vehicle is presented for scrutiny and will be subject to approval as to position, legibility and size. Modifications may be required as a result of observations during **Practice.**

b. **Competition Numbers** must be covered at all times when driving on the **Public Highway.**

c. The **Chief Timekeeper** may decline to record the performance of any **Vehicle** whose **Competition Numbers** are not readily apparent to the lap recorders.

d. The **Organisers** may, in addition to the number format provided in Ch.7 App.10, also permit **Competition Numbers** to be moved to the rear side windows (above the **Drivers**' name) on the **Vehicle** in which case.

e. The numbers for each rear side window shall be:

i. a minimum of 200mm high

ii. with a stroke width of at least 20mm

iii. coloured reflective yellow.

f. In addition the windscreen of these **Vehicles** must display the **Competition Number** positioned on the upper area of the **Passenger's** side of the windscreen as follows:

i. the numerals must be at least 150mm high

ii. be in the same colour and font as those displayed on the rear side windows

iii. be placed no closer than 50mm from the lower edge of the windscreen "sun-strip" and 50mm from the side edge of the windscreen.

4.3.1 The use of "0" or "00" is prohibited unless preceded by any number 1 to 9.

4.4. The colour may be varied for different **Categories.**

4.5. The following items must be produced by **Drivers** for inspection and approval at **Scrutineering** and be worn throughout the **Competition** properly fastened and positioned:

a. A crash helmet meeting all current regulations, which fits properly, is in a serviceable condition and bears an **ASN** approval sticker (see Ch.9 Arts.5–9).

b. Goggles or visor of splinter proof material (unless in a closed car with a full-size windscreen) sufficient to protect their eyes (see **App.10 Art.2.5**).

c. Flame-resistant overalls covering arms, legs and torso up to the neck. The use of a flame-resistant balaclava (Ch.9 Art.12.3) and gloves (Ch.9 Art.12.6) are mandatory. Flame resistant socks (Ch.9 Art.12.4), shoes and underwear (Ch.9 Art.12.2) are strongly recommended (Ch.9 Arts.3–4).

d. An **FIA** approved FHR device fitted in accordance with **FIA** regulations is mandatory.

e. For Events outside of the UK the mandatory minimum standards for Drivers would normally be FIA specification personal protection equipment.

4.6. **Vehicles** will be permitted to carry radio transmitters or receivers where the **Official Documents** allow and only for the following.

a. for **National** and above status **Permitted Events** for any **Junior Category** only a non-transmitting radio receiver tuned to the frequency of a single transmitting device which is under the direct and sole control of the **Clerk of the Course** is permitted. The system is to be used solely for providing **Competitors** with instructions or warnings issued by the **Clerk of the Course**.

4.7. Where required Ofcom licences must be in place.

5. During the Competition:

5.1. The Driver must be the only person in the Vehicle whilst the Vehicle is on the Track unless permitted by the ASN.

5.2. During any Session no team personnel are allowed on the Track.

CHAPTER 16 AUTOCROSS AND RALLYCROSS AND OFF-ROAD RACING

PART B (RALLYCROSS)

Appendix 9 - Paddock Regulations

This Appendix must also be read in conjunction with the relevant provisions of the Official Documents and Competitors must respect the terms and conditions of access to Venues imposed by Venue owners and or operators.

1. Assistance

1.1. Work on Vehicles may only take place in designated or allocated paddock areas or on the Grid under the supervision of the Scrutineer and only with the authority of the Clerk of the Course.

2. Refuelling

2.1. Refuelling of **Vehicles** other than by a **Driver** or **Officials** may only be carried out at the pits or in the paddock.

2.2. Unless expressly permitted by the **Official Documents** refuelling may not take place during a **Practice** session **Heat**, **Semi Final** or **Final**.

2.3. The **Driver** shall vacate the **Vehicle** and the engine be stopped throughout any refuelling operation.

2.4. Refuelling within the pit lane may only be carried out using either a churn of no more than 25 litres capacity equipped with a self-seal connection and closed loop breathing system or a refuelling rig in compliance with **FIA** requirements.

2.5. The **Entrant** shall ensure that throughout refuelling one person shall stand by the **Vehicle** with a fire extinguisher at the ready.

2.6. All personnel refuelling the **Vehicle** or on standby with a fire extinguisher during a pit stop must wear a safety suit in accordance with Ch.9 Art.3–4 and flame-resistant balaclava and gloves complying with **FIA** regulations.

2.7. Not more than five gallons of fuel may be kept in any pit unless the **Official Documents** allow otherwise.

2.8. In all cases where an additional quantity of fuel is authorised (see Art.2.7 above) the container and the method of delivery to the **Vehicle** must be specified in the **Official Documents**.

2.9. Storage of fuel is only permitted in containers having a screw or other approved safety cap and complying with the Law and local Fire Regulations.

2.10. If any fuel is stored in a pit the **Entrant** of the **Vehicle** using that pit shall ensure that an effective fire extinguisher is kept adjacent to such fuel.

CHAPTER 16 AUTOCROSS AND RALLYCROSS AND OFF-ROAD RACING

PART B (RALLYCROSS)

Appendix 10 - Technical Regulations

1. Rallycross Vehicles

1.1. **Racing Cars** are prohibited.

1.2. **Vehicles** will be classified as detailed in the **Official Documents**. They must be of rigid construction and comply with the regulations below. They must have been homologated in Group N, A or B of **FIA Appendix J** or in groups 1, 2, 3 or 4 of 1981 **FIA Appendix J** (although homologation may have lapsed) or commercial vehicles specifically approved by the **ASN**.

1.3. **Vehicles** complying with current **FIA Appendix J Article 279** regulations, in their entirety, are also permitted, even where homologation may have lapsed.

1.4. *Mass-produced non-homologated **Vehicles** may be accepted for events up to **National** level.

1.5. **Rallycross Vehicles** in compliance with **Ch.16, Appendix 11 Part B** and issued the **Rallycross Space Frame Vehicle Identity Form** (RXVIF). The **Vehicle** may not be used in **Competition** until the **Vehicle Identity Form** has been validated by the **ASN** and returned to the **Vehicle** owner.

1.6. **Rallycross Vehicles** of mixed construction being part **Spaceframe**, part Unitary Construction or other, issued with a **Competition Car Log Book / Vehicle Passport** prior to 31st December 2016 and complying with specific regulations approved by the **ASN**.

1.7. **Rallycross Spaceframe Vehicles** issued with a **Competition Car Log Book / Vehicle Passport** prior to 31st December 2016 complying with **Championship Technical Regulations** approved by the **ASN** (**Art.46** applies).

1.8. **Rallycross** electric **Vehicles** specifically approved by the **ASN**. Additional safety training and requirements will be an integral element of the application and approval.

2. Body (including Aerodynamics)

2.1. The **Vehicle** must have a bulkhead separating the cockpit from the engine compartment. It must retain its original material and location compared to the standard car. Installing components up against or passing through this bulkhead is permitted providing nothing protrudes into the cockpit more than 200mm (as measured perpendicularly to the bulkhead). This will be measured at the point of intrusion, and parallel to the ground. If the protrusion includes the engine, the cam / valve cover may not extend further back than the forward most point of the windscreen aperture when viewed directly from above. For **Scrutineering** purposes a 13mm diameter hole must be drilled at the forward most point of the screen aperture.

2.2. Bumpers and supports if fitted must both be as originally fitted to the mass-produced vehicle. No reinforcing of bumpers or supports is permitted. If one bumper is removed, then both must be along with all supports.

2.3. Reinforcing the front apron is not permitted.

2.4. Any undertray must be provided with drainage holes to prevent accumulation of liquids.

2.5. The windscreen must be of either laminated glass or polycarbonate of the required thickness. No apertures will be permitted in windscreens. If fitted with a glass or polycarbonate windscreen the **Vehicle** must have an operative wiper/ washer system. All **Drivers** must wear approved goggles or visors, unless the **Vehicle** is fitted with a polycarbonate windscreen. A wire mesh stone guard adequately fitted to the bodywork and with a minimum matrix of 1in is permitted with any type of windscreen. Tinted glass in any window which can significantly affect through vision (in or out) or distort the colours of signal flags or lights is prohibited (see **Ch.7 App.2 Art.6.17**).

2.6. When viewed from above wheels must be covered by rigid material at all times. The outside shape of the original coachwork must be retained except around the wings.

2.7. Openings may be made in the bonnet or boot lid for ventilation providing they do not make mechanical components visible.

2.8. The **Bodywork** must be of the vehicle manufacturers specifications and minimum thickness with the exception of airboxes, radiators, front wings, rear wings / rear quarter panels and removable parts and panels, which may be of alternative materials. Seam welding, and localised gussets/ reinforcement is permitted.

3. Engine

3.1. The engine may be modified but the block must be from a mass-produced engine and must have the same number of cylinders as the original mass-produced engine for that **Vehicle.**

3.2. **Specialist Competition Engines** as defined in Ch.1 App.1 (**Nomenclature and Definitions**) are also permitted.

3.3. The engine must be located within the original engine compartment.

3.4. Twin engine configurations are not permitted unless mass produced in that form.

4. Oil Systems

4.1. Oil systems must have catch tanks fitted.

4.2. Any oil tank located outside the chassis or main structure of a **Vehicle** must be covered with a protective coating (eg GRP)

5. Fuel Systems

5.1. These should be equipped with an effective method of stopping fuel supply which can be operated by the Driver when seated normally with seat belt secured.

6. Transmission

6.1. Transmissions can be modified.

6.2. The clutch and its control are free but automatic operation of the clutch is prohibited unless fitted by the manufacturer to that body style. The clutch must be operated by the **Driver's** feet, unless an alternative method of operation is fitted by the manufacturer to that body style. Modification for disabled **Drivers** permitted in accordance with Ch.7 App.2 Art.3.

6.3. The final drive assembly, differentials, propshafts and driveshafts are free. Electronically-controlled systems are prohibited.

6.4. *The **Official Documents** may require four-wheel drive **Vehicles** to be subject to some form of handicap (not necessarily a delayed start).

7. Electrical Systems

7.1. **Vehicles** should be equipped with an ignition cut-off switch, having a clearly marked and positive ON–OFF position, which can be operated by the **Driver** when normally seated with seat belt secured. It must also isolate electric fuel pumps.

7.2. Any forward-facing lamps of more than 32 sq cm surface area must be adequately protected against glass breakage.

7.3. All lights may be removed but all **Vehicles** must be equipped with two rear red warning lights to be used in fog, with a minimum of 15W each and an illuminated area of 60 sq cm. These must work with or replace the car brake light system at all times, must be between 1150mm and 1500mm above the ground and must be clearly visible from behind.

7.4. Generators are optional but a self-starter system must be operable at all times.

8. Brakes

8.1. Brakes may be modified but an effective handbrake is obligatory. The handbrake may be modified for fly-off operation.

8.2. There must be at least two hydraulic systems so that if one fails braking is maintained on at least two wheels (not on the same side).

8.3. The braking system on all **Vehicles** must work without impairing the **Driver's** control when tested immediately prior to an **Event.** It must be possible under all conditions, running or stationary, for 25% minimum braking effort to be applied by the **Driver** through the braking system to each axle.

8.4. Brake balance adjusters must not be capable of adjustment during running if they contravene **Art.8.3 above**.

8.5. Anti-lock devices are prohibited but brake discs are free subject to being made of ferrous material.

9. Wheels

9.1. At the start of each **Session** must be fitted with mudflaps behind all four wheels extending to a minimum of 38mm either side of the tyre tread and to a maximum of 76mm above the ground.

9.2. All nuts securing roadwheels (except centre-lock types) must be made of steel and in thread contact over a minimum length of 1$^{1}/_{2}$bolt / stud diameters.

9.3. Extended or composite wheel bolts / studs are prohibited. The use of safety wheel nuts to prevent wheels pulling over standard nuts is strongly recommended.

9.4. Maximum wheel width on all **Vehicles** is 250mm (wheel width = flange + rim + tyre).

10. Silencing

10.1. **Vehicles** must comply with silencing levels in **Ch.7 App.8 Art.2.**

11. Safety

11.1. Closed **Vehicles** must have a means of access on either side of the **Passenger** compartment which can be operated from inside or outside. Access must be sufficient to remove an occupant without interference from any door locking devices. They must have an operating windscreen wiper and washer system.

11.2. **Vehicles** must comply with safety criteria in:

a. **Ch.7 App.3 Arts.22–23**, **Ch.7 App.13 Diagrams 14, 15** or **17** with door bars as shown in **Diagram 18** mandatory.

b. With the exception of Lotus Elise / Exige derivatives and Vauxhall VX220 the door bars on the driver's side must be in accordance with **Ch.7 App.13 Diagram 21.g, 21.h** or **21.j.**

c. Harness: **Ch.7 App.7 Art.9** as a minimum.

d. Fire extinguisher: **Ch.7 App.6 Arts.1** and **3** minimum.

e. **Ch.7 App.5 Art.6**

f. **Ch.7 App.5 Art.5**

g. **Ch.7 App.7 Art.4**

12. Miscellaneous

12.1. The following parts of **Ch.7** remain unmodified: **Chassis**, Suspension, Steering, Cooling, Weight/Ballast, Exhausts.

12.2. Active suspension, and any system which allows control of the spring flexibility, shock absorption or trim height when the car is moving, is prohibited unless fitted by the manufacturer to that body style.

12.3. **ASN** or **FIA Competition Car Log Books / Vehicle Passports** are required at all **Rallycross Events**. Any **ASN Competition Car Log Book** issued prior to 31st December 2016 became invalid on 1st January 2022 and will require a newly issued Vehicle Passport.

12.4. **Vehicles** must be fitted with at least one mirror of minimum surface area 50sq cm securely mounted to give a clear view to the rear. The edges of the mirror must be protected by a suitable cover to help prevent injury in event of an accident.

12.5. Where advertising is allowed on windscreens, this must not obscure the **Driver's** vision nor reduce the minimum unobstructed vertical height to less than 250mm.

12.6. **Vehicles** must be presented at **Scrutineering** with all steering mechanisms, suspension linkages and flexible brake lines in a clean condition.

12.7. Four-wheel steering is permitted unless **Official Documents** state to the contrary.

12.8. **Seats.** Be fitted with a driver's seat **FIA Homologated** and mounted in accordance with **Ch.7 App.7 Art.2.**

12.9. For **National Events FIA** homologated seats manufactured to **FIA Standard 8855-1999** may be used for up to two years beyond the expiration of the original homologation label validity. **FIA** homologated seats manufactured to **FIA Standard 8862-2009** or **8855-2021** may be used until 31st December of the year stated on the label.

12.10. The heating of tyres or their treatment by any chemical substance is prohibited. For the avoidance of doubt, no method of abnormally raising the temperature of tyres / wheels above the natural ambient temperature is allowed.

12.11. **Vehicles** must have:

a. Internal bonnet locks removed and external positive locking fasteners fitted.

b. Steering column locks rendered inoperative.

c. Towing eyes of adequate strength and size fitted front and rear. These should be painted a contrasting bright colour.

12.12. If the engine/motor(s) is run with the drive engaged whilst the Vehicle does not have any of the driven wheels in direct contact with the ground the Vehicle must be securely supported on stands (not jacks) and:

a. A competent person must be in the driver's seat while the engine/motor(s) is running and

b. There must be a safe zone around the Vehicle with only essential personnel admitted while the engine/motor(s) is running and

c. Each **Driver / Entrant** is responsible for controlling and managing the above obligations within their own paddock space and for briefing their own personnel on all matters of safe work practices.

13. Junior Rallycross Vehicles

13.1. The only **Category** of **Vehicle** permitted in **Junior Rallycross Events**, other than **Vehicles** complying with the **MDA Junior Minicross Regulations** (as approved by the **ASN**), are those complying with the following:

a. Be a **Series Production Car**, front or rear wheel drive complying with the provisions of **Ch.7** and **Arts.1 – 12.11**.

b. Be specifically authorised by the **ASN** by issue of a **Junior Rallycross Vehicle Passport**. The **Vehicle** may not be used in **Competition** until the **Junior Rallycross Vehicle Passport** has been validated by the **ASN** and returned to the **Vehicle** owner.

c. The engine must be naturally aspirated and must not have a capacity exceeding 1400cc.

d. The cylinder head and block must remain as originally supplied by the **Manufacturer** as a **Standard Part** for that model.

e. Where the **Vehicle** is fitted as standard with an ECU then that ECU must remain fitted and as specified by the **Championship Regulations.**

f. The engine cooling system must remain standard to the **Vehicle.**

g. Induction systems, inlet manifolds and exhaust systems must remain standard to the **Vehicle.**

h. Performance air filters and exhaust back boxes are permitted.

i. At any time the **ASN** may impose further restrictions to limit engine performance.

j. The silhouette of the **Vehicle** must not be altered.

k. The bodyshell must be of the vehicle manufacturers specifications and minimum thickness with the exception of rear wings / rear quarter panels and removable parts and panels, which may be of alternative materials. Seam welding, and localised gussets / reinforcement is permitted.

l. The dashboard is to remain as standard, in the original position and the standard instruments retained and operable.

m. All other interior trim must be removed including carpets, roof lining and passenger seats. Interior door panels may be replaced with an alternate non-flammable material.

n. All window glass to be replaced with polycarbonate, **Ch.7 App.2 Art.22.9 applies.**

o. Glass sunroofs are not permitted. Sunroofs may be of a non-shattering solid rigid material other than glass. Any sunroof must be firmly secured in the closed position. The sunroof aperture may be closed by solid metallic material permanently fitted in place.

p. An interior rear view mirror must be fitted to the **Vehicle**.

q. All **Vehicles** must have substantial underbody protection covering any area of both the fuel tank and engine sump exposed to running damage.

r. The handbrake system is to remain as standard.

s. The fitting of mud flaps of a flexible material of 4mm minimum thickness behind each wheel extending to a minimum of 40mm each side of the tyre tread and to within 80mm of the ground when the car is unoccupied is mandatory

t. Wheels must be of the standard production size and material applicable to the vehicle.

u. The steering column is to remain as standard (**Part B App.10 Art.12.11.b**) but the steering column locks must be rendered inoperative. The steering wheel and mounting hub are free.

v. Standard production gearbox and differential applicable to the **Vehicle** must be used.

w. The original method of suspension operation must be retained and utilise the mounting points as provided by the manufacturer. Shock absorbers and coil springs may be uprated and adjustable.

13.2. **Safety**

13.2.1 In addition to the requirements of **Art.11 above** and **Ch.7 Apps.3** and **App.6**:

13.2.2 Double longitudinal door bars must be fitted to the drivers side of the roll cage in accordance with **Ch.7 App.13 Diagram 21.g, 21.h, 21.j.**

13.2.3 Fire Extinguisher: must be plumbed-in in accordance with **Ch.7 App.6 Art.1** minimum.

14. Historic Rallycross

14.1. **ASN** has created the Regulations for Historic Rallycross so that **Historic Cars** may be used for **Competitions** under a set of rules that seek to preserve the specification of their period and prevent modifications of performance and behaviour which could arise through the application of modern technology.

14.2. **Historic Competition** is not simply another formula in which to acquire trophies, it is a discipline apart, in which one of the essential ingredients is a devotion to the cars and to their history. Historic Motor Sport enables the active celebration of the History of the Motor Car.

14.3. Historic Rallycross vehicles must comply with the regulations below and Rallycross Vehicle Technical regulations (**Arts.1 - 12.11**) with the exception of Engine (**Art.3**).

14.4. **Cars Eligible**

14.4.1 Must have been Homologated or be a model commercially available before 31st December 1991.

14.4.2 A validated Historic Rallycross Vehicle Identity Form (HRXVIF) must be obtained from the **ASN** and presented at scrutineering. This will be the definitive document for the technical specification of the vehicle for which it has been issued. The HRXVIF will remain valid for a period of 10 years from the date of issue or such time as the registered owner of the vehicle changes if earlier.

14.4.3 **Vehicles** manufactured after the appropriate date may be permitted, providing that documentary evidence is submitted to the Motorsport UK with the identity form to show that the specific car (not model) is of the same specification as one manufactured within the specified period. This evidence will include any technical documentation supplied by the manufacturer, documents relative to the vehicle, and any other details from reliable and authenticated sources as may be available. On receipt of satisfactory evidence the **ASN** will issue an **Historic Rallycross Vehicle Identity Form** which must be presented at scrutineering.

14.5. **Permitted Modifications**

14.5.1 Only period modifications used in **Rallycross** on the particular make and model of **Vehicle** are permitted.

14.5.2 They should be detailed on the **Historic Rallycross Vehicle Identity Form** and duly ratified by the **ASN**.

14.5.3 In all cases the onus of proving a modification as being period rests with the Competitor who must submit the required documentary evidence.

14.5.4 Exceptionally the **ASN** may grant a dispensation to use non-original parts, parts from a different model, or parts from a later period, provided that the use of these parts does nor confer an advantage in either performance or reliability. The **ASN** will consider written requests from **Competitors** who are unable to source vital components.

14.6. **Engine**

14.6.1 The engine is free but the block must be from a **Series Production** or **FIA** homologated engine and must have the same number of cylinders as the original engine for that model. The engine must be located within the original engine compartment. Twin engine configurations are not permitted unless homologated in that form.

14.6.2 Standard Wankel units are considered as three cylinders, twin Wankel units as six cylinders.

14.6.3 Be equipped with a positive method of throttle closing in event of linkage failure, by means of an external spring to each throttle spindle.

CHAPTER 16 AUTOCROSS AND RALLYCROSS AND OFF-ROAD RACING

PART B (RALLYCROSS)

Appendix 11 - Rallycross Spaceframe Technical Regulations

These regulations are mandatory for all **Spaceframe Vehicles**.

All vehicles must comply with Ch.7, and App.9 Art.1-12 of this Chapter unless where specified below:

1. General Technical Requirements and Exceptions

1.1. The use of magnesium or titanium alloy is not permitted, with the exception of titanium sheets which may only be used for heat shields.

1.2. All **Spaceframe Vehicles** must have an identification number stamped into a plate measuring 80mm x 20mm which must be welded to the centre of the underside of the main 'B' hoop.

2. Safety Requirements

2.1. As a minimum:

a. **ROPS** door bars to Ch.7 App.13 Diagram 21.a or 21.g or 21.h are mandatory, on driver and passenger side.

b. Where the door bar elements of the **ROPS** cross, a reinforcement for the bend or junction must be fitted in all four angles. This reinforcement must be made from bent sheet metal with a U shape the thickness of which must not be less than 1.0 mm. The ends of this gusset (point E) must be situated at a distance from the top of the angle (point S) of between 2 to 4 times the outer diameter of the biggest of the tubes joined. Appendix 12 Drawing 8.6. A cut-out is permitted at the top of the angle but its radius (R) must be no greater than 1.5 times the outer diameter of the biggest of the tubes joined. The flat sides of the gusset may have a hole, the diameter of which must not be greater than the outer diameter of the biggest of the tubes joined.

c. A currently **FIA** homologated competition seat with appropriate mountings is mandatory in accordance with Ch.7 App.7 Art.2.

d. All **Vehicles** must be fitted with an extinguisher system plumbed-in for discharge into both the engine compartment and the cockpit (Ch.7 App.6 Art.1).

3. Chassis and Bodywork

3.1. The **Vehicle** must have the Silhouette of a **Series Production Car** of a closed type.

3.2. The wheelbase will be as per the Series Production Car specification with a tolerance of ±0.5%. The vehicle width of the Series Production Car must be retained with a maximum permitted increase of 100mm.

3.3. The minimum elements of the **Spaceframe** are shown in App.12.

3.4. The Drivers door must be of steel construction.

3.5. No element of the **ROPS** may pass through the space normally used for the front passenger; to allow driver extraction from either side of the car.

3.6. The floor frame is an integral part of the structure and the 'A' and 'B' main hoops must attach to it. The floor frame must be constructed from either minimum 50mm x 2mm square box section or minimum 50mm x 2mm diameter tube material in accordance with Ch.7 App.3 Art.20 The floor must be made of either minimum 10mm composite, 1mm steel or 2mm aluminium alloy to be fixed to the top of the floor frame as defined in App.12 Drawing 8.2.

3.7. The forward most part of the **Spaceframe** must be at least 100mm behind the forward most part of the front bumper (App.12 Drawing 8.5).

3.8. The rear most part of the **Spaceframe** must be at least 100mm forward the rear most part of the rear bumper (App.12 Drawing 8.5).

3.9. The roof must be of either minimum 10mm composite, 1mm steel or 2mm alloy to be fixed to the top of the upper surface to protect the driver as defined in App.12 Drawing 8.3.

4. Main cage

4.1. The bulkheads (Ch.7 App.2 Arts.6.1–6.4) must extend across the full width of the **Spaceframe**.

4.2. **Bulkhead**s must be made of minimum 1mm steel and be welded to the **Spaceframe**.

4.3. For front bulkheads App.9 Art.21 of this Chapter applies.

4.4. No part of the rear bulkhead must be further forward than the rearmost part of the driver's seat.

4.5. Cars with a front engine location must be constructed so that the rearmost part of the engine is at least 25mm in front of the front bulkhead.

4.6. In rear-engine cars the bulkhead must extend vertically to at least the same height as the highest part of the engine. From this point a polycarbonate window, minimum thickness 5mm may complete it, extending to the full height of the interior space as well as a horizontal cover extending to the rearmost part of the interior space (Ch.7 App.2 Arts.6.5–6.6).

4.7. In either case the full bulkhead must completely isolate the driver from the engine compartment.

4.8. A similar bulkhead must isolate the engine and exhaust system from the fuel tank Ch.7 App.2 Arts.6.1–6.4).

4.9. No part of the engine may protrude through either the front or rear bulkheads (Ch.7 App.2 Arts.6.5–6.6).

4.10. Power Transmission System / Flywheel Protection

4.11. The transmission tunnel frame will be fabricated from steel tubing with minimum dimensions of 25mm x 2mm (App.12 Drawing 8.4).

4.12. This frame to be reinforced (on the drivers' side and top of tunnel), at the rear of the gearbox and at the clutch/flywheel area, for a minimum distance of 200mm (centre lines based on the front propshaft flange and 25mm rearward from the gearbox to engine mounting face) using minimum 2.6mm steel extensively welded to the inside of the frame. Using the same centre line for 300mm minimum 1.2mm steel will be extensively welded to the outside of the tunnel. The remainder of the tunnel may be covered by minimum 1mm steel or minimum 1.5mm aluminium.

4.13. Front wheel drive, the front bulkhead must be reinforced where the flywheel and drive shafts are directly in line with the driver.

5. Aerodynamic Devices

5.1. Must not exceed the overall limits of the original bodywork dimensions (Ch.7 App.2 Arts.6.10–6.14).

5.2. Must not be wider than the widest part of the car's bodywork or higher than the highest part of the roof.

5.3. Within these restrictions their design is free

6. Body panels

6.1. Door hinges must be of adequate strength.

6.2. Body material is free subject to Art.1.1 and Art.3.4 above.

7. Engine

7.1. App.10 Arts.3.1 and 3.3 apply.

7.2. Forced Induction engines must be fitted with a restrictor in compliance with **FIA Appendix J, Article 279, Article 3.7.**

8. Suspension and Steering

8.1. The operating method and the design of the suspension system are free.

8.2. Suspension parts may not be attached to the **Spaceframe** at those elements making up the major components of the **ROPS** i.e. main/front hoop and main braces.

8.3. The springing medium must not consist solely of bolts located through flexible bushes or mountings but may be of fluid type.

8.4. There must be movement of the wheels to give suspension in excess of any flexibility in the attachments.

8.5. Chromium plating of steel suspension members is prohibited.

8.6. All suspension members must be made of homogeneous metallic material.

8.7. All vehicles must be fitted with a steering column of a collapsible type.

9. Fuel Tank / Fuel

9.1. Fuel Systems must comply with **Ch.7 App.4**.

9.2. No part of the fuel tank to be located less than 300mm from the bodyshell in both lateral and longitudinal directions, and must be outside the driver's compartment, and be separated from the driver's compartment by a metal firewall or container, both of which must be flameproof and liquid-proof.

9.3. Fuel fillers passing through the cockpit must be isolated and fitted with non-return valves at the fuel tank.

10. Exhaust and Silencing

10.1. The orifices of the exhaust pipes must be between 100mm and 450mm above the ground.

10.2. Exhaust gas may only exit at the end of the exhaust system.

10.3. All exhaust gasses including wastegate outlet must pass through the main exhaust system.

10.4. No part of the chassis may be used to evacuate exhaust gases.

11. Weights

11.1. The weight of the car is measured with the driver on board wearing their full racing apparel, and with the fluids remaining at the moment at which the measurement is taken.

11.2. The minimum weight must be:

4 Wheel Drive 1300kg

2 Wheel Drive 900kg.

CHAPTER 16 AUTOCROSS AND RALLYCROSS AND OFF-ROAD RACING

PART B (RALLYCROSS)

Appendix 12 - Spaceframe Drawings

Drawing.8.1
ROPS

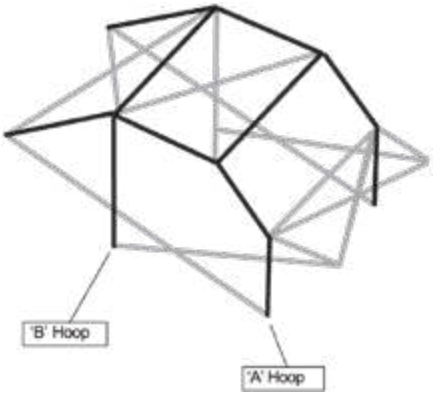

Drawing.8.2
Floor frame

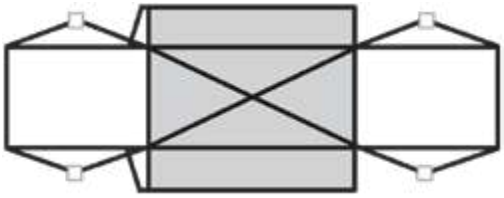

Drawing.8.3
Plan view

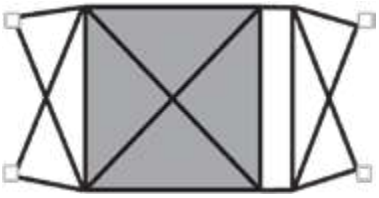

Drawing.8.4 (Pt 1)
Transmission tunnel

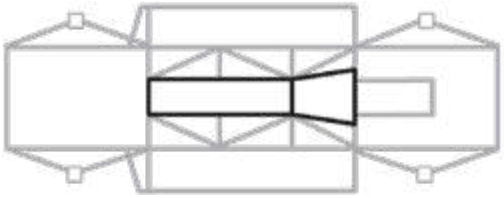

Drawing.8.4 (Pt 2)
Detail of transmission tunnel

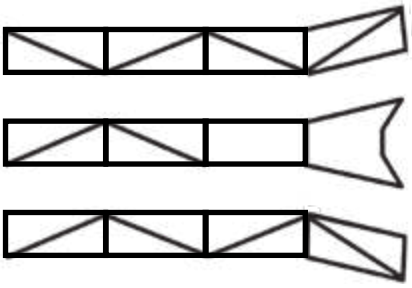

Drawing.8.6
Gusset

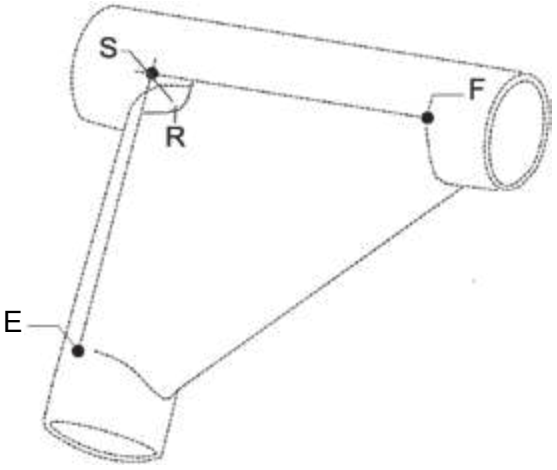

Drawing.8.5
Plan view

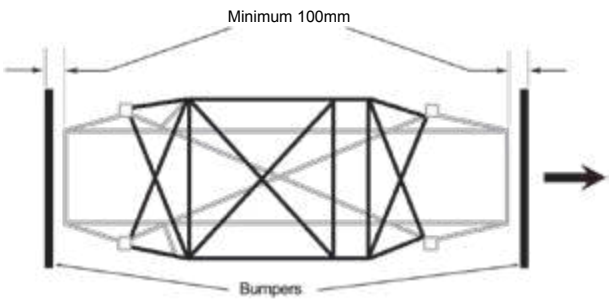

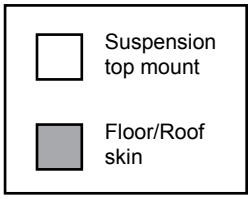

CHAPTER 16 AUTOCROSS AND RALLYCROSS

PART C (OFF-ROAD RACING)

Appendix 13 - Off-Road Racing Specific Regulations

This Appendix must be read in conjunction with **PART A** and **PART B** of this Chapter**.**

1. Off-Road Racing

1.1. Off-Road Racing, which includes Cross Car (**Art.1.11 below**) and similar **Events** can only take place on a circuit complying with **ASN Regulations**.

1.2. The maximum number of **Vehicles** that can start a **Race** is limited to 12.

1.3. **Events** must comply with the provision for **Rallycross** particularly in relation to medical requirements.

1.4. Vehicle regulations must be laid down by the organising Clubs and approved by the **ASN**.

1.5. Competitors must comply with **Chapters 6,** and with the **Official Documents** issued for the **Event.**

1.6. **Vehicles** must remain in the **Paddock** when not competing.

1.7. **Vehicles** must not be driven in the **Paddock** or at any other time off the **Track** at a speed in excess of 10mph.

1.8. **Vehicles** must not be driven into the spectators' **Enclosure** at any time without the express permission of the **Clerk of the Course.**

1.9. Any **Driver** who has not previously competed over the course within the preceding four weeks must complete at least one observed practice lap in the vehicle to be raced.

1.10. For **Venues** authorised by the issued **Track licence (Rallycross)** to include **Joker Laps,** the **Joker Lap** may be used. **Judge(s) of Fact** must be appointed to oversee its use, **PART B App.6 Art.1.5–2.1** apply.

1.11. **Cross Car (XC)** and **Cross Car Junior (XC Jnr**.) are rear engine 4 wheeled (2 wheel rear drive) single seater V**ehicles** with a multitubular spaceframe chassis which must have a safety cage as an integral part of the **Chassis**. The **ASN** have adopted the FIA technical regulation (Appendix J Art279B) (with the exemptions detailed in **Art.1.12 below**).

a. **XC – Cross Car.** A **Competitor** may participate from their 16th birthday. The minimum **Vehicle** weight with the Driver wearing full racing apparel on board and with the fluids remaining at the time the measurement is taken will be 425kg with a recommended vehicle power of 130hp.

b. **XC Jnr. – Cross Car**. A category reserved for **Drivers** having reached the year of their 14th birthday and who may continue until 31st December of the year of their 16th birthday. The **Vehicle** power will be no greater than 75hp with a minimum vehicle weight with the Driver wearing full racing apparel on board and with the fluids remaining at the time the measurement is taken of 410kg.

c. The minimum **Vehicle** weight with neither the driver nor full racing apparel and with the fluids remaining at the time the measurement is taken is 345kg. At no time during the **Competition** may a **Vehicle** weigh less than this minimum weight.

1.12. FIA Technical Regulations for Cross Cars permitted exemptions:

a. The FIA homologated ECU may be replaced with the ECU specific to the series model of motorbike engine. The ECU may be further restricted by Championship Regulations or SRs in respect of a standalone Event.

b. The manifold and exhaust are free (**Ch.7 App.8 Art.1** and **Ch.7 App.8 Art.2** apply)

c. Tyres are free (subject to **ASN** approval)

d. The series model of motorbike engine GSXR K is permitted

Chapter 17

Trials

CHAPTER 17 TRIALS

This Chapter must be read in conjunction with Chapters 1-11 as appropriate.
This Chapter is separated into the following appendices:

App. 1	Organisers Regulations
App. 2	Competitors Regulations
App. 3	Technical Regulations - Classic Reliability Trials Formula
App. 4	Technical Regulations - Car Trials Formula
App. 5	Technical Regulations - National Trials Car Formula
App. 6	Technical Regulations - Historic Sporting Trials Car Formula
App. 7	Charts and Diagrams

CHAPTER 17 TRIALS

Appendix 1 - Organisers Regulations

Note: * indicates that additional information must be provided in the **Official Documents** for the **Event**.

1. General

1.1. A **Permit** for the organisation of a **Trial** is issued at the sole discretion of the **ASN**.

1.2. A **Club** will only be allowed to run **Events** up to **Interclub** status unless the **ASN** has specifically approved an application for **National** status.

1.3. **Organisers** intending to use any Forestry Commission property for **Events** must liaise with the **ASN Forestry Liaison Officer** at least 3 months before the **Event**.

1.4. No contact should be made with Forest District before receiving approval from the **ASN** or its appointed **Forestry Liaison Officer.**

1.5. Special attention should be paid to the following:

a. Every practicable precaution must be taken to avoid depositing mud or soil on the Public Highway when leaving private property.

b. Warning notices as required by Ch.3 App.3 must be displayed.

c. The beginning and end of observed sections must be marked by signs.

d. The starts of sections should be reasonably flat and wide so that all **Competitors** can at least enter the section.

e. The layout of sections should ensure that areas can be marshalled by the minimum possible number of **Officials.**

f. Sections should be of a winding nature so as to place a premium on driving skill, although the radius of all corners must be adequate for all cars entered.

g. If possible alternative routes should be planned in case of a change of weather conditions and to provide varied routes within sections for different classes.

h. Metal rod markers should not be used.

i. Markers should be placed to avoid the likelihood of **Competitors** putting four wheels out between markers and where they are unlikely to be moved by bushes or branches.

j. Clearly visible sub-section numbers should have a minimum figure height of 50mm.

k. Sub-section markers should be closely grouped in areas of expected failure.

l. **Organisers** should be aware of the nearest hospital and the best route to get to it in case of incident.

m. When **Competitors** under 17 years of age are allowed to compete **Organisers** should note the information in App.2 'Crew' and Ch.6 Art.9 regarding Minimum Ages.

n. No person under the age of 14 can act as a marshal or assistant marshal unless under the constant supervision of a marshal over 18 years old.

o. At single site **Events** a **Medium sized Spill Kit** must be available at each section or group of adjacent sections.

p. At **Events** which utilise the public highway each **Vehicle** must carry a **Small Spill Kit** as defined in Ch.1 App.1.

2. Classic Reliability Trials

2.1. In addition to Arts 1.1–1.6 above **Organisers** of **Classic Trials** must:

a. Locate any **Holding Controls** so as to avoid public nuisance.

b. Draw to the attention of **Competitors** any sensitive areas in the vicinity of the route.

c. Brief all **Marshals** and ensure they are readily identified.

d. Appoint and brief a **Chief Official** who should be clearly identified for each observed section to ensure that the **Trial** is seen not to unduly inconvenience members of the public.

e. Ensure that the **Chief Official** has a working knowledge of the **Rights of Use** of the section.

2.2. *The **Official Documents** must specify the following which are additional to and take precedence over App. 2 Arts 2–5.4

a. Any public roads which are to be part of the route.

b. Any observed sections or tests on public roads.

c. The method of detailing the route and any maps required.

d. Any time schedule.

e. The time interval between cars at the **Start.**

f. The method of resolving ties.

g. The boundaries of observed sections which must be indicated by natural hazards flags or posts.

h. The start or re-start line in an observed section or test which may be varied for each **Class.**

2.3. Any signs displayed except during an observed section test or quiet zone will be considered as supplementary aid without mandatory authority unless otherwise specified in the **Official Documents.** The mandatory marking for quiet zones does not preclude the **Competitor's** responsibility to take necessary action should the sign not be in position.

2.4. Judges may be appointed to adjudicate on:

a. Stopping at Stop and Give Way signs.

b. Unauthorised use of auxiliary lights.

c. Unauthorised possession of radio equipment.

d. Contravention of **Out of Bound** areas.

2.5. **Driving Standards Observers** may be appointed to adjudicate on:

a. Excessive vehicle sound (observed during the **Event**).

b. Excessive speed.

c. Driving in a manner likely to bring Motorsport into disrepute.

d. Inconsiderate parking or waiting.

2.6. No private road must be used by **Competitors** unless specific permission to do so is given in the **Road Book** or **Route Card.**

2.7. **Competitors** must visit controls checks observed sections and tests in the order set out in the **Road Book** or **Route Card** unless otherwise specified.

2.8. **Organisers** should notify the appropriate Parish Councils.

2.9. **Organisers** should issue instructions on the sensible use of the roads, including:

a. Closing of gates etc.

b. Clearing of roads at end of sections.

c. Following the 'Country Code' adding that that failure to observe the **Code** may lead to disciplinary action.

2.10. *The **Organisers** may establish a check at any point to observe maintenance of a set speed time schedule or route provided the intention to do so is stated in the **Official Documents** and **Competitors** are given information to enable them to comply.

2.11. **Official Documents** and **Final Instructions** to **Competitors** in **Event**s using Footpaths, Bridleways and Restricted Byways should include the following statement:

"This Event is routed along and/or across public rights of way. **Competitors** must exercise caution and reduce their speed accordingly near other path users. Be especially careful near horses. Slow down, stop and switch off your engine if necessary."

2.12. The **Specific Regulations** should clearly state if the **Public Highway** is to be used. Any part of an **Event** that takes place on the **Public Highway** must comply with the Motor Vehicles (**Competitions** and **Trials) Regulations** and will require public relations work to be undertaken as specified in **Art.2.12.1**, **2.12.2** and **App 7 Chart 2**.

2.12.1 Public Relations work must be undertaken by **Organisers** on all **Events** using the **Public Highway** in accordance with the current legislation and as follows:

a. Consult with the **Route Liaison Officers** before starting PR work. If the **RLO** requires additional PR work in sensitive areas this must be undertaken.

b. Be diplomatic positive and clear about the legal aspects of route authorisation.

c. If the **Event** is run in England or Wales do not intimate that it is authorised by the Police.

d. Avoid asking for 'authorisation' or 'permission' from house-holders – it invites unnecessary difficulties.

e. All PR work must be by responsible members of the **Organising Club** or of a **Local Club**.

f. The work should be completed to allow enough time to undertake a re-route should this prove necessary.

g. All PR letters must be checked by the **RLO** and must indicate who is the **Organiser** (with a contact address including email and phone number) the date of the **Event** in which direction it is travelling and the approximate time of passing.

h. Special consideration should be given to householders with pets or livestock.

2.12.2 Where an **Organiser** is intending to publish a guide to the route or specific locations for spectators to see the Event ensure that:

a. Householders within 500m of any specifically advised location have been effectively PR'd without difficulty and these areas are marshalled.

b. The information issued contains warnings of locations that spectators must avoid (blackspots, sensitive areas etc).

c. Ensure that each PR crew prepares reports on each visit and these are available to the **Clerk of the Course** and the **Stewards** on the day of the **Event** and to the **RLO** on request.

d. Special note must be made about problem areas for the benefit of future **Events** and these reports must be passed on to **RLO**s.

2.13. Any time schedule on the **Public Highway** or any part of the route must not exceed:

	Daylight	Darkness
Motorways	60mph	
Trunk and A-roads	30mph	
B-roads	26⅔ mph	20mph
All other roads	20 mph	15mph
All heavily populated areas	15 mph	

2.14. When **Controls** are less than 20 miles apart (except start and finish controls where the length of the route is 20 miles or less) the time schedule on the public highway must not exceed an average speed of 15mph.

2.15. The **Route Card** must show both time and mileage between individual points so that changes in **Permitted** average speeds are apparent.

2.16. *Any maps required by **Competitors** must be notified in the **Official Documents**.

2.17. **Organisers** must ensure the status of any **Tracks** along the route is verified and stated in the Route Book.

2.18. Where it is proposed to use or cross any **Footpath, Bridleway** or **Restricted Byway** the **Organiser** must:

a. Obtain the agreement of the Landowner and the Highway Authority (unless the route is already on a road of higher status).

b. Notify the Police (clarifying the nature of the **Event**).

c. Notify the National Parks (if appropriate).

d. Ensure a **Liaison Officer** is appointed to deal with the above matters and resolve any difficulties.

2.19. No oral instruction to **Competitors** during an **Event** will be valid if it affects any of the route or the time schedule or the layout or the performance of an observed section or test.

2.20. Any such instruction to vary the elements referred to at Art.2.19 above must be displayed as an **Official Notice** or issued in writing to each **Competitor.**

2.21. Any **Competitor** driving at an excessive speed in a reckless manner or in a manner likely to bring Motor Sport into disrepute or convicted of any driving offence committed during an **Event** may be disqualified.

2.22. **Competitors** must declare in writing to the **Organisers** at the **Finish** whether during the **Competition** they have been involved in any incident or accident involving or causing damage to other persons or property.

2.23. Observed sections may not be more than a quarter of a mile long and no special time schedule may be applied from start to finish of a section more than 100yds long (an Observed Test).

2.24. The layout of sections should take account of the location of possible failure points.

2.25. *The **Official Documents** must specify the exact procedure to be followed on each section where there is a stop and Re-Start test. Unless the **Official Documents** specify otherwise a stop and Re-Start must take place at either a line to be stopped astride or in a designated zone within which at least two wheels must be placed. When the car as judged by a **Marshal** is completely at rest it must re-start in a forward direction only. Any rearward movement of the **Vehicle** will incur a penalty.

2.26. Sections should if possible be of sufficient width to allow a choice of route.

2.27. Sub-section numbers should be placed on the right-hand side.

2.28. The **Organisers** of **Event**s on a single site should have a **First Aid Kit** on-site at a clearly identified location.

2.29. Penalty marks will be incurred in accordance with App.2 Art.5.4.

2.30. Check **Vehicles** for sound before the **Start** or along the route. These checks should be manned by experienced **Driving Standards Observers**. Noisy **Vehicles** must be stopped if necessary and be reported to the **Clerk of the Course.**

3. Car Trials

In addition to Arts 1.1–1.6 above **Organisers** of **Car Trials** must:

3.1. Wherever possible the use of road sections should be avoided. If road sections are used then Arts.2.6 and 2.9–2.22 apply.

3.2. *The entry in may be split into class groups of roughly equal number, which should start from different observed sections simultaneously.

3.3. The layout of sections should take account of the location of possible failure points and safe exit routes.

3.4. Sections should if possible be of sufficient width to allow a choice of route and at no point be less than 4m wide.

3.5. The use of trees or natural hazards as course boundaries should be avoided where possible.

3.6. Stakes should not be placed against trees.

3.7. It is recommended that sections be laid out using a minimum of 13 pairs of marker stakes of a minimum height of 1m and with colour coding to clearly identify each side of the route. (see diagram in App 7 Drawing 2). Additional markers may be used to clarify different routes for different classes or to clarify Art.1.6.g.

3.8. *If sub-section numbers are not placed on both sides of the route, they should be on the right-hand side, with the corresponding guide markers on the left-hand side.

3.9. **Organisers** may at any convenient time after the start of the **Competition** require **Competitors** in some or all **Classes** to increase or decrease the minimum permitted tyre pressure by a maximum of 5lb/sq in. This decision must be advised to **Competitors** in writing and sufficient time must be allowed for them to comply.

3.10. The Organisers of Events on a single site should have a First Aid Kit on-site at a clearly identified location.

3.11. A minor proportion (up to 30%) of the sections can be timed but any time penalties must be related using a published formula to points lost on a section, which shall be published in the **Official Documents**.

3.12. Timed sections must be a maximum of 200m long and the maximum time allowed for the section shall be stated in the **Official Documents**.

3.13. The **Official Documents** must specify the starting Signal, the method of timing and when timing commences.

3.14. No Competitor exceeding the specified average speed (App.2 Art.12.8) should gain any advantage nor be penalised.

3.15. Competitors must not receive any award for equalling or improving upon the target time or achieving the fastest times or least penalties for such sections.

4. Sporting Trials

4.1. In addition to Arts 1.1–1.6 above **Organisers** of Sporting **Trial**s must:

4.2. Road sections should not be used.

4.3. The entry in should be split into groups of equal number, which should start from different observed sections simultaneously.

4.4. The layout of sections should take account of the location of possible failure points and safe exit routes.

4.5. Sections should if possible be of sufficient width to allow a choice of route.

4.6. The use of trees or natural hazards as course boundaries should be avoided where possible.

4.7. Stakes should not be placed against trees.

4.8. It is recommended that sections be laid out using a minimum of 13 pairs of marker stakes of a minimum height of 1m and with colour coding to clearly identify each side of the route. (see diagram in App.7 Drawing 2). Additional markers of other colours may be used to clarify Art.1.6.g.

4.9. *If sub-section numbers are not placed on both sides of the route they should be on the right-hand side with the corresponding guide markers on the left-hand side.

4.10. There should be a **First Aid Kit** (including an eye bath) on-site at a clearly identified location.

4.11. **Organisers** may at any convenient time after the start of the competition require **Competitors** in some or all **Classes** to increase or decrease the minimum permitted tyre pressure by a maximum of 5lb/sq in. This decision must be advised to **Competitors** in writing and sufficient time must be allowed for them to comply.

5. Historic Sporting Trials

5.1. In addition to **Arts 1.1–1.6** above **Organisers** of **Historic Sporting Trials** must:

5.2. *The use of road sections should be avoided. If road sections are used then **Arts.2.6** and **2.9-2.22** apply.

5.3. *The entry in should be split into class groups of roughly equal number which should start from different observed sections simultaneously.

5.4. The layout of sections should take account of the location of possible failure points and safe exit routes.

5.5. Sections should if possible be of sufficient width to allow a choice of route.

5.6. The use of trees or natural hazards as **Course** boundaries should be avoided where possible.

5.7. Stakes should not be placed against trees.

5.8. It is recommended that sections be laid out using a minimum of 13 pairs of marker stakes of a minimum height of 1m and with colour coding to clearly identify each side of the route. (see diagram in **App 7 Drawing 2**). Additional markers may be used to clarify different routes for different classes or to clarify **Art.1.6.g.**

5.9. *If sub-section numbers are not placed on both sides of the route, they should be on the right-hand side, with the corresponding guide markers on the left-hand side.

5.10. **Organisers** may at any convenient time after the start of the competition require **Competitors** in some or all **Classes** to increase or decrease the minimum permitted tyre pressure by a maximum of 5lb/sq in. This decision must be advised to **Competitors** in writing and sufficient time must be allowed for them to comply.

5.11. There should be a First Aid Kit (including an eye bath) on-site at a clearly identified location.

CHAPTER 17 TRIALS

Appendix 2 - Competitors Regulations

Note: * indicates that additional information must be provided in the **Official Documents** for the **Event**.

1. Eligibility

1.1. *__Competitors__ must report at the start and for scrutineering at the times stated in the **Official Documents.**

1.2. Any **Competitor** reporting late may be fined disqualified or may forfeit any claim to a favourable starting position.

1.3. At the **Start** each **Competitor** any **Passengers** and the **Vehicle** must all be checked for eligibility.

1.4. **Drivers** and **Passengers** must produce a valid **Club Membership Card** and **Competition Licence** as detailed in Ch.6

1.5. **Passengers** under 18 years old will not be considered as **Competitors** for the purpose of **Club Membership.**

2. The Crew

2.1. The same **Driver** must drive throughout any **Competition** unless otherwise stated in the **Official Documents**.

2.2. 'Bouncing' will be permitted only within the confines of the seating compartment and then only so long as no portion of either the **Driver's** or **Passenger**'s body other than arms and hands is placed outside the sides of the car or behind the seat they are occupying.

3. Numbers

3.1. **Competition Numbers** will be issued at the **Start** and must be displayed on each car throughout the **Competition**.

3.2. Numbers will be allocated by the **Organisers**.

3.3. **Competitors** will start in numerical order.

3.4. Numbers must be removed at the **Finish** or if a **Competitor** retires.

4. Observed Sections and Route

4.1. Details of observed sections and tests (if any) must be issued at the **Start** and the onus of following the correct route will rest with the **Competitor**.

4.2. Any signs displayed other than in an observed section will be a supplementary aid without mandatory authority.

4.3. *There will be no time schedule to be maintained during the **Event** unless the **Official Documents** specify otherwise.

4.4. **Competitors** will proceed from point to point with as little delay as possible and any **Competitor** suspected of loitering may be ordered to proceed by an **Official.**

4.5. **Competitors** arriving at a test or an **Observed Section** more than 20 minutes after the preceding **Competitor** may be refused permission to attempt that test or observed section.

4.6. No unauthorised assistance is allowed and cars must complete the course under their own power.

4.7. No case of force majeure will be taken into consideration.

4.8. Before attempting an observed section **Vehicles** must be brought to rest with a leading front wheel hub vertically over the **Start** line as indicated by **Officials** and the **Driver** must not proceed until instructed to do so.

4.9. It is permissible to start the **Vehicle** when only one hub is on the line and the car is askew providing the other hub has not crossed the line.

4.10. **Competitors** must attempt to negotiate observed sections non-stop unless the **Official Documents** specify otherwise.

4.11. Failure of a **Vehicle** to maintain unassisted forward motion in the direction of the **Course** will be regarded as failure to comply with this requirement.

4.12. The point of failure will be at a vertical line from the centre of the hub of the front wheel which is the furthest from the start of the section. See **App 7 Drawing 2**.

4.13. Observed sections may be divided into subsections. In such cases signs will indicate the beginning and end of the sub-sections.

4.14. A **Vehicle** will be deemed to have entered an observed section or subsection when a vertical line from the leading front wheel hub centre has passed any marker indicating the beginning of the section.

4.15. A **Vehicle** will be considered to have left an observed section or sub-section when a vertical line from the leading front wheel hub centre has passed any marker indicating the end of the section.

4.16. Failure to proceed for whatever reason from the starting position into an observed section when instructed to do so will be regarded as failure in that section.

4.17. The start line will indicate the greatest penalty and the Finish line zero penalty.

5. Results

5.1. Judges may be appointed to adjudicate on:

a. Conforming with the correct route on the course.

b. Touching markers.

c. Failure to proceed non-stop when required.

d. Conformity with **Arts.7**, **11** or **15** below.

e. Noise.

f. Time of arrival/departure at observed section test control or check.

g. Unauthorised smoking.

h. Unauthorised assistance or servicing.

5.2. Performances on any observed section or test may be ignored at the **Organiser's** discretion even though there have been successful attempts to negotiate the section or test. If this discretion is exercised no performance on the section or the test in question will be taken into account when compiling the results. This discretion may be for a **Class** or a number of **Classes.**

5.3. **Competitors** start with zero marks.

5.4. *Penalty marks will be incurred as follows unless otherwise stated in the **Official Documents**:

	Marks Lost
a. Each minute late in reporting at the start or re-start	5
b. Failing in observed section not divided into sub-sections	6
c. Failing in observed section not divided into sub-sections which includes a stop and re-start type test	6
d. Failing in an observed section which is divided into sub-sections. (The penalty for failure will decrease In proportion to the number of sub-sections negotiated non-stop)	12
e. Failing in observed section which includes a stop and Re-Start type test. The **Penalty** for failure will decrease according to the position of the test within the section.	12
f. Not attempting or being ready to attempt an observed section sub- section or test when instructed so to do.	12
g. Not complying with a reasonable instruction by an **Official** for which a **Penalty** is not otherwise stipulated provided warning of the **Penalty** is given	12
h. **Driver** and/or **Passengers** not seated in accordance with Art.2.2 above	12
i. Causing undue noise at any point	12
j. Breach of any statutory requirement concerning the use of a motor **Vehicle** during the **Event**	12
k. For second offence under (i) or (j)	Event Disqualification
l. Varying ballast during **Event** (per offence)	50

Classic Trials

6. Eligibility

6.1. Competing **Vehicles** must comply with App. 3.

7. The Crew

7.1. **Passengers** must be properly seated i.e. both the **Passenger** and the seat back must be upright and facing forward.

7.2. Where the **Driver** is over 17 years old and holds a full RTA **Licence** the **Passenger** must fulfil the minimum age requirement below.

Open or Convertible **Vehicles**	14
Saloons or hardtop **Vehicles**	12

7.3. If Art.2.1 is varied entries may be accepted from **Drivers** aged 16 or from Drivers of 17 or over who do not hold a full RTA **Licence**. In such cases the **Driver** must be accompanied by a **Passenger** who holds a full RTA **Licence** and is experienced as a **Driver** of **Classic Trials** to the satisfaction of the **Clerk of the Course**. Any such **Driver** may only attempt sections wholly on private land.

7.4. Additionally the rear seats of saloon cars can be occupied by the number of people for whom they were designed. **Passengers** who occupy the rear seats of the **Vehicle** must not be less than 2 years of age any child under 12 years of age or 135cm in height must be seated using an approved ‘child restraint’.

7.5. **Passengers** aged between 2 and 12 years old will be signed on by their parent or guardian.

7.6. **Passengers** are not required to occupy the front seat where suitable rear seats are available unless the **Official Documents** state otherwise. All **Passengers** in a vehicle with a soft-top or no roof must be at least 14 years of age. However in Class 8 only one **Passenger** is allowed who must occupy the seat alongside the **Driver.**

7.7. Members of the crew at the Start cannot be varied during an **Event** except with Official approval.

8. Observed Sections and Route

8.1. *The **Official Documents** including the **Route Book** will specify whether sub-section signs are penalty markers as per **Arts.12.2-12.4**.

8.2. A **Competitor** will also be considered to have failed to negotiate an observed section non-stop if all four wheels are positioned outside the boundary of the course at the same time. The boundary is represented by a straight line drawn from course marker to course marker along the direction of the course, or by natural obstacles preventing such a straight line.

8.3. All markers are deemed live and those markers that are not in the sequence being negotiated by the **Competitor** shall be considered as indicating the section's boundary, unless deemed otherwise on a particular section by the **Clerk of the Course**. In such cases the penalty recorded shall be that of the part of the section between gates and not necessarily the value of the marker touched.

8.4. To be classified as a finisher a **Competitor** being the car and crew entered must have attempted at least 75% of the total number of observed sections and arrive at the **Finish** under its own power within 20 minutes of the time of arrival of the preceding **Vehicle**.

9. Results

9.1. *The **Competitor** incurring the least **Penalty** will be the winner and so on.

Car Trials

10. Eligibility

10.1. Competing **Vehicles** must comply with **Appendix. 4** except that in **Clubman Events** the **Organisers** may state in the **Official Documents** that any or all of the following **Car Trials Technical Regulations** have been replaced by the equivalent **Classic Trials Regulations** at **App.4 Arts.5.1.a., d., e. and 8.2, 9.4, 10.1.a.** and **c.**.

11. The Crew

11.1. During all Observed Sections and tests the seat alongside the Driver must be occupied unless otherwise stated in the Official Documents.

11.2. If a **Passenger** is carried they must be properly seated i.e. both the **Passenger** and the seat back must be upright and facing forward and:

a. Where the **Driver** is over 17 years old and holds a full RTA **Licence** the **Passenger** must be of at least 12 years of age.

b. Entries may be accepted from **Drivers** aged 14 15 or 16 or from **Drivers** of 17 or over who do not hold a full RTA **Licence**. In such cases the **Driver** must be accompanied by a **Passenger** who holds a full RTA **Licence** and is experienced as a **Driver** of **Car Trials** or **Sporting Trials** to the satisfaction of the **Clerk of the Course.**

11.3. Additionally the rear seats of saloon cars can be occupied by the number of people for whom they were designed. **Passengers** who occupy the rear seats of the **Vehicle** must not be less than 2 years of age any child under 12 years of age or 135cm in height must be seated using an approved 'child restraint'.

11.4. **Passengers** aged between 2 and 12 years old will be signed on by their parent or guardian.

11.5. Members of the crew at the **Start** cannot be varied during an **Event** except with **Official** approval.

12. Observed Sections

12.1. Unless the **Official Documents** state otherwise at some convenient break after approximately half the **Observed Sections** have been attempted the running order will be reversed within each **Class**. **Competitors** will remain in the correct running order unless instructed otherwise by an **Official.**

12.2. A **Competitor** will also be considered to have failed to negotiate an observed section non-stop if:

a. Any part of their **Vehicle** or its occupants touch a marker.

b. All four wheels are positioned outside the boundary of the **Course** at the same time. The boundary is represented by a straight line drawn from course marker to **Course** marker along the direction of the **Course.**

12.3. The point of failure will be considered to be that at which any marker is first struck or the point at which the boundary of the course is first crossed by all wheels of the competing **Vehicle**.

12.4. Should this point of failure coincide with the division between two sub-sections the marks lost will be those appropriate to failure in whichever of the two sub-sections provides the greater penalty.

12.5. All markers are deemed live and those markers that are not in the sequence being negotiated by the **Competitor** shall be considered as indicating the section's boundary unless deemed otherwise on a particular section by the **Clerk of the Course**. In such cases the penalty recorded shall be that of the part of the section between gates and not necessarily the value of the marker touched.

12.6. To be classified as a finisher a **Competitor** must have attempted at least 75% of the sections and hand in their score card to the Secretary of the **Event** within 20 minutes of the preceding **Competitor**.

12.7. At the **Organisers**' discretion a minority (up to 30%) of the **Observed Sections** may be timed if provided for in the **Official Documents**. The following conditions shall apply:

12.8. Only those sections which the **Organisers** anticipate will be completed without penalty by the majority of **Competitors** may be timed.

a. Any such timed section must be less that 200m long.

b. No **Sub-Sections** of an arduous or demanding nature can be used.

c. The maximum time allowed for each timed section must be stated in the **Official Instructions** prior to the commencement of the Test.

d. The maximum time allowed for each timed section must not require any **Competitor** to exceed 15mph or 30 seconds per 200m.

13. Results

13.1. Each **Competitor** will be provided with a results card which must be produced on demand by **Officials** to mark at each section unless otherwise stated in the Official Documents.

13.2. *In calculating Class positions the actual number of marks lost by each **Competitor** is the deciding factor. However where an overall best performance (irrespective of Class) is required an Index of Performance will be established for each Class by taking the average performance of the best 50% of finishers (or if there is an odd number of finishers the total plus one) in the respective Class.

13.3. To be classified as a finisher for index purposes only a **Competitor** must have attempted all sections. **Competitors**' marks lost are then expressed as a percentage of this index.

13.4. In the **Event** that the best 50% of finishers (as defined in Art.13.2 above) represents less than five **Competitors** then scores equivalent to that of the **Class** winner must be added to the results of the Class a sufficient number of times so that the average for the **Class** can be based on five scores.

13.5. In the **Event** of one or more **Competitors** finishing with a total score of zero for the whole **Event** then a notional penalty of one mark will be added to the total score of ALL finishers before calculating the **Index**

of Performance.

13.6. Ties will be resolved by comparing the number of penalties lost by each **Competitor** on each section the winner being the **Competitor** who has the greater number of low penalties. Should this method not resolve the tie the **Organisers** may resort to the 'furthest cleanest' principle starting from Hill One.

Sporting Trials and Historic Sporting Trials

14. Eligibility

14.1. Cars must comply with App.5 or App.6 or 750MC Trials Formula as appropriate.

15. The Crew

15.1. During all **Observed Sections** and tests the seat alongside the **Driver** must be occupied by a **Passenger** who must be properly seated i.e. both the **Passenger** and the seat back must be upright and facing forward. The **Passenger's** hips must be located within the cockpit and on or in front of the rear axle line (Penalty as per Art.5.4.h).

15.2. Where the **Driver** is over 17 years old and holds a full RTA **Licence** the **Passenger** must be of at least 14 years of age.

15.3. Entries may be accepted from **Drivers** aged 16 or from **Drivers** of 17 or over who do not hold a full RTA **Licence**. These **Drivers** must be accompanied by a **Passenger** who holds a full RTA **Licence** and is experienced as a **Driver** in **Sporting Trials** and who must produce a valid **Club Membership Card.**

15.4. Members of the crew at the **Start** cannot be varied during an **Event** except with **Official** approval.

16. Observed Sections

16.1. A **Competitor** will also be considered to have failed to negotiate an **Observed Section** non-stop if:

a. Any part of their **Vehicle** or its occupants touch a marker.

b. All four wheels are positioned outside the boundary of the course at the same time. The boundary is represented by a straight line drawn from **Course** marker to **Course** marker along the direction of the course.

16.2. The point of failure will be considered to be that at which any marker is first struck or the point at which the boundary of the **Course** is first crossed by all wheels of the competing **Vehicle**.

16.3. Should this point of failure coincide with the division between two sub-sections the marks lost will be those appropriate to failure in whichever of the two sub-sections provides the greater penalty.

16.4. All markers are deemed live and those markers that are not in the sequence being negotiated by the **Competitor** shall be considered as indicating the section's boundary unless deemed otherwise on a particular section by the **Clerk of the Course.** In such cases the **Penalty** recorded shall be that of the part of the section between gates and not necessarily the value of the marker touched.

16.5. To be classified as a finisher a **Competitor** must have attempted at least 75% of the sections and hand in their score card to the **Event Secretary** within 20 minutes of the preceding **Competitor**.

17. Results

17.1. *The **Competitor** incurring the least penalty will be the winner and so on.

17.2. Each **Competitor** will be provided with a results card which must be produced to the **Officials** to mark at each section.

17.3. Ties will be resolved by comparing the number of penalties lost by each **Competitor** on each section the winner being the **Competitor** who has the greater number of low penalties. Should this method not resolve the tie the **Organisers** may resort to the 'furthest cleanest' principle starting from Hill One.

CHAPTER 17 TRIALS

Appendix 3 - Technical Regulations – Classic Reliability Trial Vehicles

Note: (1) * indicates that additional information must be provided in the **Official Documents**

Note: (2) This Appendix must be read in conjunction with App. 2 and Ch.7

1. General

1.1. **Classic Reliability Trial Vehicles** will be classified as follows unless otherwise stated in the **Official Documents**:

Class	Description
1	Front-engined, front wheel drive production **Vehicles** (including those fitted with Torque Biasing/Limited Slip Differentials).
2	Production cars built prior to 1941, and the following: MG TC, Morgan 4-4 Series 1, HRG 1100 and 1500, and Ford models (upright models to 1959) E04A, E494A, E4930A/B, E93A, E493A, and 103E. Dellow Mk 1,2,3 & Bucklers Mk 5&6, Pre 1941 Cars holding a current VSCC Buff Form, Non- production cars built from pre-1941 components individually approved.
3	Front-engined, rear wheel drive, production saloons (except **Vehicles** in **Class** 6).
4	Rear-engined, rear wheel drive production saloons up to and including 1300cc (except **Vehicles** in **Class** 7).
5	(a) Front-engined production sports cars (except **Vehicles** in **Classes** 1, 6 and 90). (b) **Vehicles** in full HST Historic Class specification with fiddle brakes disabled. (c) Non-production cars built mainly from pre-1941 components (except **Vehicles** approved for **Class** 2) individually approved. Such **Vehicles** may include some post war components including BMC A-Series engines up to 948cc, Reliant OHV engines, A Series Rear Axles, Ford 105E Series Back Axles, Tubular Frame Chassis. These **Vehicles** must have at least one operational European carburettor and run on tyres satisfying Art 7.13 (Crossplies). (d) Production cars eligible for **Class** 2, but running on radial tyres.
6	(a) Rear-engined, rear wheel drive production cars (except **Vehicles** in **Class** 4). (b) Front-engined production cars fitted with torque biasing differentials as standard equipment, or any other form of traction control as standard equipment, throughout that model range and unavailable without it from stock.
7	(a) Production cars modified beyond permitted limits. (b) Rear-engined production cars fitted with torque biasing differentials as standard equipment, or any other form of traction control as standard equipment, throughout that model range and unavailable without it from stock. (c) Front engine cars manufactured on a limited basis conforming to an accepted specification. Where modified beyond the accepted specification these cars will be classified in **Class** 8.
8	(a) Non production cars. (b) Rear-engined cars (except **Vehicles** in **Classes** 4, 6, and 7). (c) Front-engined cars manufactured on a limited basis (except those in **Class** 7) including those which: (i) Have the rearmost part of the front seat cushion(s) rearward of any part of the rear tyres, or (ii) Have a wheelbase less than 90in (228.6cm)
90	Suzuki X90 **Vehicles** having the original engine block.

1.2. A current MOT certificate where appropriate must be produced at the **Scrutineers'** request.

2. Safety

2.1. All **Vehicles** must comply with **Construction and Use Regulations** and be fitted with safety belts if appropriate. Where fitted seat belts must be worn on the **Public Highway.**

2.2. Handheld fire extinguishers to a level of safety specified in Ch.7 App.6 Art.3 are mandatory and which are accessible to the crew (note a 1.75ltr minimum for AFFF or 2x1ltr AFFF or 2x1kg Powder is permitted).

3. Chassis / Body

3.1. **Chassis**/body structures must comply with definitions of a **Saloon, Closed, Sports** or **Touring Car** as applicable.

3.2. In particular **Vehicles** must:

a. Be equipped with an effective windscreen or aero-type screen.

b. The body overhang of non-production cars must not exceed one-fifth of the overall car length at the front and one- third at the rear. Overhang is measured from the line of the road wheel centres.

c. For production cars any extensions must not exceed the overhang proportions of a non-production car. Any additional spare wheel carrier should be fitted as close as possible to the body and satisfy Arts.7.9–7.12 Production cars need not comply with Ch.7 App.2 Art.6 in respect of bonnets.

d. Retain their original wheelbase. Any alteration to the wheelbase of a production car (except in **Class** 2) will transfer the car to **Class** 8.

e. Be equipped with the same number of seats as intended by the manufacturer.

f. Have the forward and rearward bulkheads of the engine compartment in their original positions.

g. Retain the engine cover boot lid and wings although the material may be changed.

3.3. With the exception of cars of periods A to D all cars must be equipped on all wheels with mudguards which present no sharp edges and cover the complete wheel (flange+rim+tyre) around an arc of 120 degrees. This minimum coverage must:

a. be achieved with a continuous surface of rigid material. The rear tyre must not be visible when viewed from above

b. extend forward ahead of the axle line

c. extend downward behind the wheel

d. extend downward behind the driven wheel to a point no more than 150mm above the axle centre line.

3.4. **Vehicles** must be equipped with two fixed seats for **Driver** and **Passenger** the rearmost part of which must not be behind the rear wheel axis.

3.5. The weight distribution of the **Vehicle** may be altered by the addition of **Ballast.**

3.6. The position of the battery spare wheel and fuel tank may be changed but any further modifications will cause the **Vehicle** to be reclassified to **Class** 7(a).

3.7. In **Classes** 1 to 7 and 90 any **Ballast** tool or other boxes must be positioned within the body shell or the bumpers firmly secured and not visible protruding or varied during **Events** (see Art.3.10).

3.8. A luggage box within the plan view of the car may be included in an accepted specification for a car in **Class** 7(c).

3.9. The silhouette of **Vehicles** in **Classes** 1 to 6 and 90 as seen from the side must be unaltered except for the engine cover, spare wheels and bumpers. Bumpers may be removed but if retained must be in the original manufacturer's position.

3.10. In **Class** 2 **Vehicles** the chassis must be that of the original manufacturer for the **Vehicle** although a change in bodywork is permitted providing it is in keeping with the period.

3.11. To be eligible for **Class** 7(a) the chassis/floor pan of the original car (between wheel centres) must be

retained.

4. Engine

4.1. The engine must comply with Ch.7 App.2 Art.8 regarding positive throttle closure by external springs unless exempt due to the use of original standard manufacturer fitted electronic throttle control.

4.2. If forced induction is used, the coefficient will be 1.4:1.

4.3. There are no restrictions on engine tuning providing the cylinder block is of the same manufacture and configuration as the original.

4.4. The make type and number of carburettors is unrestricted.

4.5. The position of the engine mountings in the chassis may not be altered. Any further modifications will cause the **Vehicle** to be reclassified to **Class** 7(a).

4.6. No part of the external exhaust system may be more than one metre above the ground.

5. Brakes

5.1. **Vehicles** must not have separate braking for individual driven wheels (fiddle brakes).

6. Suspension

6.1. Springs and shock absorbers may be changed and additional springs and shock absorbers fitted.

6.2. Anti-tramp and anti-roll bars Panhard Rods and Watts Linkages are permitted.

6.3. Except for **Classes** 7(a) and 8 the original springing system and spring mounting points must be retained in operational use eg leaf spring systems must retain at least the minimum number of leaves specified by the manufacturer and must not be replaced by coil or other springing systems.

7. Wheels and Tyres

7.1. Duplicated driving wheels are not Permitted unless specified in the **Official Documents**.

7.2. **Competitors** must carry a spare wheel and tyre as a replacement for one wheel on the **Vehicle.**

7.3. Wheels of up to the standard diameter must be used except for **Classes** 5(c) 7(a) and 8 where wheel diameter is free.

7.4. In **Class** 8 the maximum tyre section must be 185mm.

7.5. In all **Classes** 1 to 8 and 90 (except **Class** 2) the maximum permitted difference between front and rear tyres must be two sections.

7.6. No tyre may be smaller than that recommended by the car manufacturer.

7.7. Standard tyres must be used and all types of Grip and Town & Country block patterns are prohibited. Radial tyres with a maximum tread gap exceeding 8mm are prohibited. A tyre will be deemed to have a block gap not exceeding 8mm if when fitted to a rim and inflated to 25psi an 8mm round bar will stick in the gap when horizontal. Purely circumferential gaps may be ignored.

7.8. In all **Classes** spare wheels must be firmly secured by a permanent fixing.

7.9. Not more than two spare wheels may be carried externally and these must be fitted as close as possible to the bodywork (excluding bumpers).

7.10. No part of the spare wheel(s) may be mounted externally in front of the windscreen unless in the manufacturer's standard position or on the roof.

7.11. **Vehicles** with an external rear-mounted spare wheel in the manufacturer's standard position may add a second spare wheel mounted flush with the original wheel with no spacer.

7.12. The spare wheel(s) or mounting(s) may not extend rearwards more that 200mm from a vertical line passing through the rearmost part of the original bodywork (excluding bumpers) or more than 100mm beyond the rearmost part of the original bumper position for the model of **Vehicle** whichever creates the lesser protrusion. An alternative maximum dimension not exceeding 400mm may be included in an accepted specification for a car in **Class** 7(c).

7.13. **Class 2 Vehicles** must use cross-ply tyres (which need not be listed in **Ch.8 App.4 Lists 1** or **2** but which must not be of Grip Town & Country or Dual Purpose pattern).

8. Transmission

8.1. Be fitted with non-torque biasing differential in full and free operation between the driving wheels unless:

a. A differential was not fitted by the manufacturer.

b. The **Vehicle** is restricted to running in a nominated **Class** or **Formula.**

8.2. **Vehicles** must be two-wheel drive only unless the Official Documents of the Event allow four-wheel drive.

8.2.1 Four-wheel drive vehicles operating in two-wheel drive mode are not eligible, unless Permitted by the Official Documents.

8.3. It is not permitted to change the gearbox or transaxle casing (except in **Class** 7(a) or 8) or **Vehicles** running to an accepted specification.

8.4. Original gear ratios may be changed.

8.5. It is not permitted to fit limited slip torque biasing locked or lockable differentials other than as provided for in 6 and 7(b) as standard equipment.

8.6. The rear axle casing must not be modified except for cars in **Classes** 7(a) and 8 and those cars in **Classes** 1 and 3 to 6 whose model and mark type was originally manufactured before 1955.

8.7. **Vehicles** may fit replacement differentials crown wheels and pinions provided the differential action remains free operating.

9. Electrical Systems

9.1. **Vehicles** must have a maximum of four forward facing beams in addition to side and indicator lights.

9.2. Auxiliary lights should not be used in non-competitive sections except in fog or falling snow as permitted by law.

9.3. All lights must be fitted and used in accordance with the **Motor Vehicle Lighting Regulations.**

10. Miscellaneous

10.1. Other than **Ch.7:** and in the following sections there are no special requirements under **Vehicle** Regulations for: Chassis/Engines Suspension Brakes Steering Cooling Oil Systems Fuel Systems Electrical Systems Weight/**Ballast** Exhausts.

10.2. Auxiliary lamps unless fitted as standard equipment using gas discharge or LED technology are not permitted and gas discharge or LED headlamp units may not be retro fitted.

10.3. Any car which has been improved within the manufacturer's specification for the range will be considered as a production car.

10.4. The fitting of a safety roll-over bar is recommended.

10.5. The fitting of sump chassis and exhaust under-body guards and proprietary tow bars is permitted.

10.6. The footbrake clutch and accelerator pedals must all be in their original positions.

10.7. Silencing of **Vehicles** must be to the levels specified in **Ch.7 App.8 Art.2** with engines running at three quarters maximum rpm.

10.8. For **Vehicles** in **Class** 2 (pre-1941) any mechanical modification as permitted by **Art.4** must be compatible with the period.

10.9. Rearward vision whilst properly seated within the confines of the **Vehicle's** bodywork or ROPS must be possible. **Vehicles** with solid rear bulkheads or an obstructed view along the centreline of the longitudinal axis must be fitted with either external rear view mirrors or a reversing camera. Mirrors and/or cameras must be operational during competition.

10.10. Exhaust Catalytic Converters are required per **Ch.7 App.8 Art.1.8** except where a **Vehicle** does not require a catalytic converter in accordance with UK Government legislation.

10.11. Battery powered **Vehicles** may compete in appropriate classes in **Car Trials** and **Classic Reliability Trials**, (excluding **Sporting Car Trials**), subject to the **Official Documents** of the **Event**.

CHAPTER 17 TRIALS

Appendix 4 - Technical Regulations – Car Trials Formula

Note: (1) * indicates that additional information must be provided in the **Official Documents**

Note: (2) This Appendix must be read in conjunction with **App.2 and Ch.7**

1. Classes:

1.1. ***Classes** are free but must be stated in the **Official Document**s. The following are suggested.

1.2. **CLASS A FWD SERIES PRODUCTION CARS CARRYING NO BALLAST**

Front wheel drive cars of any age, carrying no ballast and having no modifications except as follows:

a. the fitting of under body protection weighing no more than 10kg (including fittings)

b. the replacement of wheels in accordance with **Art.8.2 below**

c. the replacement of tyres in accordance with **Art.8.3 below**

Minimum tyre pressures on driven wheels:

up to 1200 cc: 12 psi

up to 1400 cc: 14 psi

over 1400 cc: 16 psi

1.3. **CLASS S NEW UNMODIFIED FWD SERIES PRODUCTION CARS CARRYING NO BALLAST**

Standard front wheel drive cars first registered on or after 1 January 2009*, taxed for road use, carrying no ballast and having no modifications except as follows:

a. the fitting of under-body protection weighing no more than 10kg (including fittings);

b. the replacement of wheels in accordance with **Art.8.2 below**

c. the replacement of tyres in accordance with **Art.8.3 below**

Minimum tyre pressures on driven wheels:

up to 1200 cc: 12 psi

up to 1400 cc: 14 psi

over 1400 cc: 16 psi

* 2009 will be retained for the years 2024, 2025 & 2026 after which it will be reviewed.

1.4. **CLASS B FWD SERIES PRODUCTION CARS**

Permitted modifications in accordance with **Arts.2.1–10.5 below**.
Minimum tyre pressures on driven wheels:

up to 1200cc: 12 psi

up to 1400cc: 14 psi

over 1400cc: 16 psi

1.5. **CLASS C 1990 ONWARDS RWD SERIES PRODUCTION CARS AND SPORTS CARS**

Rear wheel drive Series Production Cars and Sports Cars first registered on or after 1 January 1990. Permitted modifications in accordance with **Arts.2.1–10.5 below**. Minimum tyre pressures on driven wheels:

Front engined: 14 psi

Mid/rear engined: 20 psi

1.6. **CLASS D SERIES PRODUCTION CARS NOT ELIGIBLE FOR ANY OTHER CLASS AND KIT CARS**

a. RWD SERIES PRODUCTION CARS

Permitted modifications in accordance with **Arts.2.1–10.5**. Minimum tyre pressures on driven wheels:
FE Sports Cars up to 1800cc: 16 psi

FE Saloon Cars up to 1800cc: 14 psi

RE Cars up to 1000cc: 22 psi

FE Sports Cars over 1800cc: 22 psi

FE Saloon Cars over 1800cc: 20 psi

RE Cars over 1000cc: 26 psi

b. MODIFIED SERIES PRODUCTION CARS AND KIT CARS**

Cars (not eligible for Classes A,B or C) complying with **App.3 Art.1** Classes 1-6 and 7(b) and front engined Kit Cars modified beyond Car Trials Formula regulations and up to the limits specified in **App.3 Art.1** Class 7(c), and with the ACTC approved specification readily available for inspection. **App.3 Art.1.2** does not apply as MoT is not required when off road. The Car Trials Wheel and Tyres regulations **Art.8.2–8.3** must be complied with. Minimum tyre pressures on driven wheels:

FWD Cars: 16 psi

FE Kits Cars: 24 psi

FE RWD Cars: 22 psi

RE Cars: 26 psi

Compliance shall not extend to **App.3 Art.7.1 or **Art.8.2 below** i.e. only wheels of the sizes detailed in their ACTC specification may be used. In all other cases of rule compliance **Classic Reliability Trial Vehicles'** regulations will prevail.

2. General

2.1. *Any car fitted with a torque biasing differential or any other form of traction control as catalogued for that car may have tyre pressures set at 4psi above the specified **Class** pressure.

2.2. Cars with an overall length of 166 inches and over in **Classes** A and B above may reduce tyre pressures by not more than 4 psi subject to an absolute minimum pressure of 10 psi.

2.3. Optional or alternative equipment as listed by the manufacturer may be fitted with the exception of gear and differential ratios.

2.4. Special tuning and competition catalogues etc. are not acceptable as manufacturer's handbooks.

3. Safety

3.1. **Vehicles** must comply with Construction and Use Regulations and be fitted with safety belts if appropriate. The following are recommended:

a. Safety roll-over bar to safety criteria **Ch.7 App.3 Art.22** and **Art.23**.

b. The wearing of seat belts is optional when fitted to the vehicle..

c. Handheld fire extinguishers to safety criteria **Ch.7 App.6 Art.3** (note a 1.75ltr minimum for AFFF or 2 x 1ltr AFFF or 2 x 1Kg Powder is permitted).

4. Chassis/Body

4.1. **Vehicles** should not have any chassis or body alterations except:

a. In **Classes** B-D Bodywork ahead of and below the centre line of the front wheels and behind and below the centre line of the rear wheels may be removed.

b. Panels to the front and rear of the centre line of the front and rear wheels respectively may be replaced by panels from any model in the same family of cars.

c. In **Classes** B-D the weight distribution of the **Vehicle** may be altered by the addition of **Ballast** which must be positioned within the body shell or bumpers firmly secured and not visible or protruding.

d. **Ballast** must not be varied during an **Event.**

e. The fitting of sump chassis and exhaust under-body guards is permitted.

f. External mirrors may be removed.

4.2. In particular **Vehicles** must:

a. Be equipped with an effective windscreen or aero-type screen.

b. The body overhang of non-production cars must not exceed one-fifth of the overall car length at the front and one- third at the rear. Overhang is measured from the line of the road wheel centres.

c. For production cars any extensions must not exceed the overhang proportions of a non-production car. Any additional spare wheel carrier should be fitted as close as possible to the body. Production cars need not comply with **Ch.7 App.2 Art.6** in respect of bonnets.

4.3. With the exception of cars of periods A to D all cars must be equipped on all wheels with mudguards which present no sharp edges and cover the complete wheel (flange+rim+tyre) around an arc of 120 degrees. This minimum coverage must:

a. be achieved with a continuous surface of rigid material. The rear tyre must not be visible when viewed from above

b. extend forward ahead of the axle line

c. extend downward behind the wheel

d. extend downward behind the driven wheel to a point no more than 150mm above the axle centre line.

4.4. **Vehicles** must be equipped with two fixed seats for **Driver** and **Passenger** the rearmost part of which must not be behind the rear wheel axis.

5. Engine

5.1. Engine tuning is permitted within the following limitations:

a. The cylinder head and block must remain as originally supplied by the manufacturer as standard for that model.

b. If the **Class** structure suggested in **Arts.1.1–1.6** above is used then except for **Classes** B and C the carburettors and inlet and exhaust manifolds must remain as originally supplied by the manufacturer as standard for that model.

c. Fuel injection and/or forced induction are prohibited unless offered by the manufacturer as standard or optional equipment for that model.

d. Stroke of the crankshaft may not be altered.

e. Cylinders may be re-bored to a maximum of +0.060in.

5.2. If forced induction is used, the coefficient will be 1.4:1

6. Brakes

6.1. **Vehicles** must not have separate braking of individual driven wheels (fiddle brakes) but it is permitted to increase the braking power of the **Vehicle**.

7. Springs and Shock Absorbers

7.1. Spring and shock absorber mounting points must be retained unaltered. In **Class**es B-D the springs and shock absorbers themselves may be changed and anti-roll bars and anti-tramp bars added.

8. Wheel and Tyres

8.1. Duplicated driving wheels are not permitted unless specified in the **Official Documents**.

8.2. It is permitted to replace standard wheels provided they can be fitted without altering the hubs or anything attached to them.

8.3. Tyre sizes and aspect ratios are free providing they are compatible with Construction and Use Regulations for the **Vehicle** concerned.

8.4. Use of the following tyres is prohibited:

a. those having any of the following patterns inscriptions or manufacturers' designations: 'Emergency Use' or 'Temporary Use', 'All Seasons' 'Grip' 'Snow' 'Special Use' 'Town & Country' 'Mud & Snow' 'M+S' 'M.S.' 'M&S' or the Three Peaks Mountain Snowflake symbol;

b. those constructed primarily for off-road use;

c. those having additional grooves intentionally cut into the tread pattern [post manufacture].

d. Goodyear All Weather Steel Radial Goodyear Vector Pirelli P7 Michelin XRN or Uniband Rally Steel.

8.5. Tyres with sidewall markings removed are prohibited in all Events unless they are correctly marked 'Retread' or 'Remould'.

8.6. Spare wheels and tyres must only be carried in the same numbers and mounting position(s) as provided by the manufacturer.

8.7. On the driven wheels only use minimum tyre pressures as specified in the **Official Documents.**

9. Transmission

9.1. Be fitted with non-torque biasing differential in full and free operation between the driving wheels unless:

a. A differential was not fitted by the manufacturer.

b. The **Vehicle** is restricted to running in a nominated **Class** or **Formula.**

9.2. **Vehicles** must be two-wheel drive only unless the **Official Documents** allow four-wheel drive.

9.3. Four-wheel drive **Vehicles** operating in two-wheel drive mode are not eligible unless Permitted by the **Official Documents.**

9.4. If the **Class** structure suggested in **Arts.1.1–1.6** above is used then only gear and axle ratios as stated in the Official manufacturer's datasheet for the model and year of manufacture can be used except for **Vehicles** in **Class** D(b)

9.5. *Where components are changed to alter gear ratios as provided for above they must be readily interchangeable and from the same car manufacturer.

10. Miscellaneous

10.1. All **Vehicles** must:

a. Have bumpers fitted when originally supplied for the **Vehicle** except **Vehicles** in **Class** D(b)

b. Be allowed to use proprietary accessories available for the **Vehicle**

c. Not use alloy or plastic panels unless fitted as original equipment

10.2. If the **Class** structure recommended in **Arts.1.1–1.6** above is used then rear seats must be fitted in the same way as originally supplied.

10.3. Battery powered **Vehicles** may compete in appropriate **Classes** subject to the Official Documents of the Event.

10.4. Other than **Ch.7:** and in the previous sections there are no special requirements under **Vehicle** Regulations for: Chassis/Engines Suspension Brakes Steering Cooling Oil Systems Fuel Systems Electrical Systems Weight/**Ballast** Exhausts.

10.5. Exhaust Catalytic Converters are required per **Ch.7 App.8 Art.1.8** except where a **Vehicle** does not require a catalytic converter in accordance with UK Government legislation.

CHAPTER 17 TRIALS

Appendix 5 - Technical Regulations – National Trials Car Formula

Note: (1) * indicates that additional information must be provided in the **Official Documents**

1. Eligibility

1.1. The **National Trials Car Formula** involves four-wheel **Vehicles** complying with all **Technical Regulations** except:

a. **Ch.7 App.2 Arts.6.5–6.9 and Arts.22.4 - 22.9.**

b. **Period Vehicle Waivers**.

1.2. **Vehicles** can be divided into two classes up to 850cc and over 850cc up to 1650cc.

1.3. Details of 750 Motor Club Trials Formula should be obtained from:

750 Motor Club, Donington Park Circuit, Melbourne Road, Castle Donington, Derby, DE74 2BN

Tel: 01332 814548.

2. Safety

2.1. An electrical cut out switch per **Ch.7 App.5 Art.5** is mandatory. The switch must be located on the offside rear of the car and be rearward facing - see **App. 7 Drawing 1**. **Ch.7 App.3 Art.25.2** is recommended.

3. Chassis

3.1. **Chassis** construction is free but permitted wheelbase and width dimensions are shown in the **App. 7 Chart 1.**

3.2. **Vehicle** engines must be located with the centre of the foremost original manufacturer's sparking plug orifice not more than one-fifth of the wheelbase behind the centre line of the front wheel hubs where the only operative water radiator is mounted in front of the engine or one-eighth if no radiator is fitted in front of the engine (tolerance 1cm).

4. Body

4.1. There is no requirement for a windscreen or aero-type screen.

4.2. The bodywork must be of adequate strength and proper construction to provide a compartment for Driver and Passenger. It must meet the following criteria:

a. The front and rear overhangs must be as specified in **App. 7 Chart 1.**

b. It must be equipped with fixed seats for a Driver and one adult Passenger and have seat backs not less than 30.5cm measured from the uncompressed base seat cushions along the angle of the seat back.

c. The rearmost portion of the seats (without cushions) at this 30.5cm height must not be behind a line through the vertical axis of the rear hubs.

4.3. All Passenger handles must be of rigid construction securely anchored and neither flexible nor adjustable.

4.4. No handle must be capable of touching the ground in the event of a roll-over and all handles must be sited so that in the event of the car hitting a solid object the handles are protected from contact with the object by the chassis.

4.5. Any handle forward of the centre line of the rear axle must be fixed in accordance with dimension E as detailed in **App. 7 Chart 1.**

4.6. Rear mudguards must be of adequate strength to protect Driver and Passenger from wheels and tyres.

4.7. Rear mudguards must cover the full length of the tyre in plan-view at the top of the wheel and must extend outwards to within 5cm of the outside edge of the tyre wall.

4.8. Front mudguards must cover the full width of the tyre over an arc of 90° and extend rearward to not more than 10° above the horizontal line through the front hub.

5. Engine

5.1. **Vehicles** must use a single four-stroke production car engine not exceeding 1650cc. If forced induction is used, the coefficient will be 1.4:1 and the engine must comply with **Ch.7 App.2 Art.8** regarding positive throttle closure by external springs unless exempt due to the use of original standard manufacturer fitted electronic throttle control.

5.2. Modifications are free.

6. Suspension

6.1. Any form of suspension can be used. For minimum track front and rear details see **App. 7 Chart 1.**

7. Steering

7.1. Any form of connection from steering wheel to the front wheels is permitted.

7.2. The position of the two swivel axes must not vary whilst steering.

7.3. Four-wheel steering is not permitted.

8. Brakes

8.1. **Vehicles** must be fitted with operative and effective front and rear brakes.

8.2. Independent rear braking is permitted but no self- compensating controls are permitted on the rear brakes which must be single leading-shoe drum brakes or disc brakes.

9. Wheels and Tyres

9.1. Duplicated driving wheels are not permitted.

9.2. Wheel rims must not exceed a width of 11.43cm (4.5in) measured between the bead flanges nor a diameter of 15inches for driven wheels.

9.3. Tyre security devices are permitted in the rims.

9.4. Wheels should not carry any chains spikes or non-skid attachments.

9.5. Tyres must be of a maximum size 165mm x 15inches on driven wheels and must be selected from **Ch.8 App.4 Tyre List 3**.

9.6. **Vehicles** fitted with tyres that have previously been included in **Ch.8 App.4 Tyre List 3** may compete for class awards only and may not be included in the overall classification.

9.7. **Vehicles** must carry one spare only which must be a driving wheel as fitted on the car fitted with any listed tyre. It is not permitted to add ballast to the spare wheel.

9.8. Motorcycle tyres on non-driven wheels are permitted.

9.9. Minimum tyre pressure 2psi.

10. Transmission

10.1. **Vehicles** must be equipped with a differential gear which divides torque equally between the driving wheels.

10.2. **Vehicles** should not use any locked or lockable torque biasing or limited slip differentials or any other automatic device which is designed to achieve the same result.

10.3. Any clutch/torque converter attached to the engine flywheel must be bolted directly to the engine crankshaft.

10.4. Gearboxes and transmissions with a sequential shift are prohibited.

11. Weight

11.1. Free.

12. Miscellaneous

12.1. **Vehicles** can have a starter motor mounted on either engine block or clutch cover.

12.2. **Vehicles** must comply with the silencing levels specified in **Ch.7 App.8 Art.2.**

12.3. All measurements must be in accordance with these regulations when the car is unladen on a level horizontal surface.

12.4. Other than **Ch.7** and in the previous Articles of this Appendix there are no special requirements under **Vehicle Regulations** for: Chassis/Engines Suspension Brakes Steering Cooling Oil Systems Fuel Systems Electrical Systems Weight/Ballast Exhausts.

CHAPTER 17 TRIALS

Appendix 6 - Technical Regulations – Historic Sporting Trial Car Formula (HST)

Note: (1) * indicates that additional information must be provided in the **Official Documents**

1. General

1.1. **Vehicles** must be prepared in the spirit of the period. The term "period" refers to the **Historic Class** for cars manufactured between 1/1/1931-31/12/70 and for cars in the Post **Historic Class** those manufactured between 1/1/1971 – 31/12/1978.

1.2. The Organisers of a **Historic Sporting Trials** reserve the right to disqualify any car that has a specification, component or modification (other than permitted specification modifications) that would not have been used in period.

1.3. In all cases the onus of proving a specification, component or modification as being in period rests with the Competitor who must submit the required documentary evidence.

2. Eligibility

2.1. The **Historic Sporting Trials Car Formula** involves four-wheel **Vehicles** complying with all **Ch.7 Technical Regulations** except:

a. **Ch.7 App.2 Arts.6.5–6.9** and **22.4–22.9**

b. **Period Vehicle Waivers** (E to G)

2.2. In the following **Regulations**:

a. The term "Ford Sidevalve" refers to components from the following models: E04A, E494A, E4930A/B, E93A, E493A, E83W, 100E and 103E.

b. The term "period" refers to the **Historic Class** for cars manufactured between 1/1/1931-31/12/70 and for cars in the **Post Historic Class** those manufactured between 1/1/1971 – 31/12/1978.

3. Classes

3.1. **Vehicles** will be divided into two classes, **Historic** (1/1/1931 – 31/12/1970) and **Post-Historic** (1/1/1971 – 31/12/1978) according to their technical construction in the following regulations.

4. Chassis

4.1. Must be of period design, constructed of steel tube and complying with the wheelbase and track dimensions shown in **App.7 Chart 1.**

4.2. **Vehicle** engines must be located with the centre of the foremost original manufacturer's sparking plug orifice not more than one-fifth of the wheelbase behind the centre line of the front wheel hubs where the only operative water radiator is mounted in front of the engine or one-eighth if no radiator is fitted in front of the engine (tolerance 1cm).

5. Body

5.1. The **Chassis** must be covered by an open body of period design constructed from Aluminum, Steel or Fibreglass.

5.2. The bodywork must be of adequate strength and proper construction to provide a compartment for **Driver** and **Passenger.** It must meet the following criteria:

a. The front and rear overhangs must be as specified in **App.7 Chart 1.**

b. It must be equipped with fixed seats for a **Driver** and one adult **Passenger** and have seat backs not less than 30.5cm measured from the uncompressed base seat cushions along the angle of the seat back.

c. The rearmost portion of the seats (without cushions) at this 30.5cm height must not be behind a line through the vertical axis of the rear hubs.

d. All Passenger handles must be of rigid construction securely anchored and neither flexible nor adjustable.

e. No handle must be capable of touching the ground in the event of a roll-over and all handles must be sited so that in the event of the car hitting a solid object the handles are protected from contact with the object by the chassis.

f. Rear mudguards must be of adequate strength to protect **Driver** and **Passenger** from wheels and tyres.

i. Rear mudguards must cover the full length of the tyre in plan view at the top of the wheel and must extend outwards to within 5cm of the outside edge of the tyre wall.

ii. Front mudguards must cover the full width of the tyre over an arc of 90° and extend rearward to not more than 10° above the horizontal line through the front hub.

6. Engine

6.1. Only the following engines are permitted in **Historic Class**:

a. Ford Sidevalve.

b. BMC A Series up to 948cc

c. Austin 7

d. Reliant 600/700/750 OHV

e. Reliant 750 Sidevalve.

6.1.1 Maximum of 60 thou overbore is permitted, the stoke must be standard and the camshaft and valves must be in original position.

6.2. **Post Historic Class** must use a period engine of up to 1650cc.

6.3. At least one period European Carburetor must be fitted and in operation

6.4. Forced induction is not permitted unless originally fitted to the vehicle.

6.5. Ignition systems must use a period distributor but the use of a contact breaker is not mandatory.

6.6. Ignition mapping or any form or engine management system is not permitted.

6.7. Electric Water Pumps and cooling fans are permitted.

6.8. The fitting of a generator is optional.

7. Gearbox

7.1. **Historic Class Vehicles** must be:

a. Fitted with a gearbox from a series production car of period. the casing and gear ratios may not be modified other than the fitment of a Ford 100E input shaft to a Ford 8 gearbox.

b. The gearbox must be bolted directly to the engine.

8. Suspension

8.1. **Historic Class Vehicles** must use transverse leaf front suspension unless the vehicle was manufactured in period using coil over dampers with the lower mountings on or close to the king pins. Otherwise **Vehicles** must be fitted with period leaf or coil spring systems.

8.2. Only steel bodied dampers are permitted.

8.3. Gas, remote reservoir or double adjustable dampers are not permitted.

8.4. Independent suspension is not permitted.

9. Front Axle

9.1. **Historic Class Vehicles** must be fitted with the front axle beam from an Austin 7 or Ford Sidevalve.

9.2. **Post Historic Class Vehicles** must be fitted with a steel front axle beam of period design.

10. Steering

10.1. Cars in the **Historic Class** must use a period steering box.

10.2. The position of the two swivel axles must not vary whilst steering.

10.3. Four-wheel steering is not permitted.

11. Rear Axle

11.1. **Vehicles** must use a live rear axle from a period series production car.

12. Transmission

12.1. **Vehicles** must be equipped with a differential gear which divides torque equally between the driving wheels.

12.2. Vehicles must not use any locked or lockable torque biasing or limited slip differentials or any other automatic device which is designed to achieve the same result.

12.3. Any clutch/torque converter attached to the engine flywheel must be bolted directly to the engine crankshaft.

12.4. Gearboxes and transmissions with a sequential shift are prohibited.

13. Brakes

13.1. Disc brakes are not permitted.

13.2. **Vehicles** must be fitted with operative and effective front and rear brakes.

13.3. Independent rear braking is permitted but no self-compensating controls are permitted on the rear brakes which must be single leading-shoe drum brakes.

14. Wheels and Tyres

14.1. Tyre security devices are permitted in the rims.

14.2. Wheels must not carry any chains, spikes or non-skid attachments.

14.3. **Vehicles** must carry one spare only which must be a driven wheel as fitted on the car fitted with any permitted tyre

14.4. It is not permitted to add **Ballast** to the spare wheel.

14.5. Motorcycle tyres on non-driving wheels are permitted. Minimum tyre pressure 2psi.

14.6. In **Historic Class** a control tyre specified in the **Official Documents** must be used on the driven wheels. Front wheels must bolt onto the brake/hub.

14.7. In **Post Historic** the rear wheels rims must not exceed a width of 11.43cm (4.5in) measured between the bead flanges nor a diameter of 15in.

14.8. Tyres must be of a maximum size 165mm x 15in on driving wheels and must be selected from **Ch.8 App.4 Tyre List 3** or previous lists.

15. Weight

15.1. Free.

16. Miscellaneous

16.1. **Vehicles** can have a starter motor mounted on either engine block or clutch cover.

16.2. **Vehicles** must comply with the silencing levels specified in **Chapter. 7 App.8 Art.2.**

16.3. All measurements must be in accordance with these **Regulations** when the car is unladen on a level horizontal surface.

16.4. Fuel must be Gasoline / Petrol as defined in **Ch.1 App.1**.

16.5. The lowest overall forward gear ratio is 23:1.

16.6. No **Ballast** may be carried.

CHAPTER 17 TRIALS

Appendix 7 - Charts and Diagrams

Chart 1

National Trials Car Formula dimensions (in mm) for Under and Over 850cc Classes.

Under 850cc		*Class*	
		Over 850cc	
A	Minimum wheelbase	1905	1981
B	Minimum front track measured on C/L of tyre's contact patch	1117	1117
C	Minimum rear track measured on C/L of tyre's contact patch	1117	1117
D	Minimum cockpit width	813	813
E	Minimum to Passenger handle	635	635
F	Maximum front axle to no. 1 plug (tolerance 10mm)	1/5 of wheelbase	1/5 of wheelbase
G	Maximum rear overhang	1/3 of wheelbase	1/3 of wheelbase
H	Minimum height side to seat	152	152
J	Minimum seat back height	305	305
K	Minimum front mudguard arc	90°	90°
L	Maximum rear mudguard from tyre edge	51	51

Note: CD Radiator in front of engine, if water-cooled.

NATIONAL TRIALS CAR FORMULA DIMENSIONS

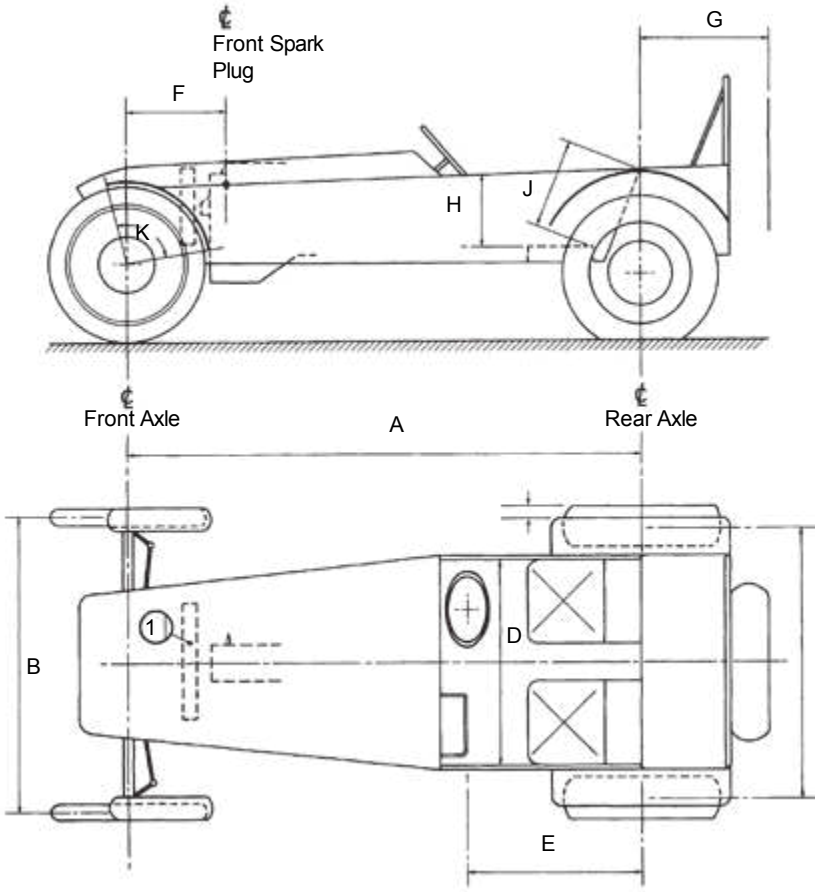

Drawing 2

Diagram illustrating the application of App.2 Art.4.12. The lower figures preceded by F indicate the correct penalties for a car stopping in the position shown.

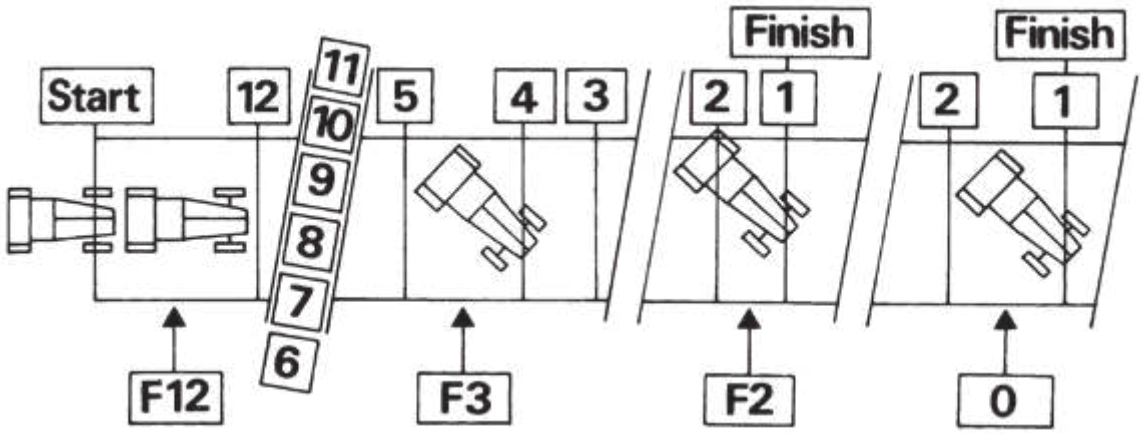

Drawing 1

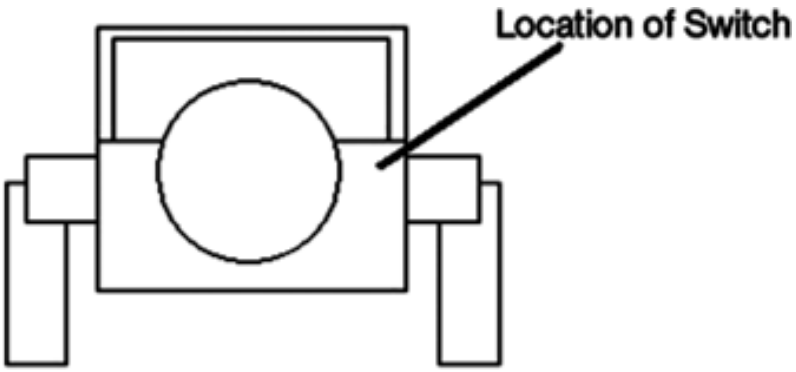

Chart 2
PR Requirements

CODE	PR REQUIREMENTS
A	Personal visit to an adult member of household within 100m.
B	Letter to each householder within 100m.
C	Public notice.
D	Personally visit and obtain signature from an adult member of any household within 500m of any point where competitors are required to stop (i.e. any control or clue point).
E	Consult RLO.
F	Personal visit to an adult member of household within 150m.
G	If timed to the second, not pass through any area which has in excess of 20 occupied dwellings within 300m radius of the route, unless written agreement is given by all of the householders within that area and the Motorsport UK has given its permission.
H	Letter to each householder within 100m, unless the RLO agrees to a lesser requirement.

ALL EVENTS TRAVERSING THE PUBLIC HIGHWAY

Permit	Section	Road Type	Time	PR Requirement
ROAD RALLY (inc. HISTORIC)	STANDARD (timed to second) inc. STANDARD (time to minute)	All Classes (see 10.2)	23.59 to 1 hour after sunrise	A(G) D
		All Classes	24 hour	B D
	REGULARITY	A & B Habitation	22.00 to 07.00	C D
		Yellow/White UCR/Private	24 hour	H D
		A & B Habitation	07.00 to 22.00	E D
	TRANSPORT & NEUTRAL	White/UCR/ Private	24 hour	B D
		Yellow	22.00 to 07.00	E D
		Habitation A, B & (Yellow 07.00 to 22.00)	24 hour	C D
ECONOMY, NAVIGATIONAL & 12 CAR RALLIES (All types) VINTAGE (22.00 to 07.00)	STANDARD & REGULARITY	A & B Habitation	22.00 to 07.00	C D
		A & B Habitation	07.00 to 22.00	E D
		Yellow/White UCR/Private	24 hour	H D
	TRANSPORT & NEUTRAL	White/UCR Private	24 hour	B D
		Yellow	22.00 to 08.00	E D
		A, B, Habitation & (Yellow 07.00 to 22.00)	24 hour	E D
VINTAGE (07.00 to 22.00)	ALL	ALL	07.00 to 22.00	C D

VETERAN	ALL	ALL	24 hour	C	D
NAV. SCATTERS	ALL	ALL	24 hour	E	D
TREASURE HUNTS TOURING ASSMS.	ALL	ALL	24 hour	E	D
SPECIAL STAGE RALLIES including SINGLE VENUE STAGE RALLIES	ROAD	A & B, Habitation	22.00 to 07.00	C	D
		Yellow	22.00 to 07.00	B	D
		White/UCR/ Private	24 hour	B	D
		A, B, Yellow Habitation	07.00 to 22.00	E	D
	ACCESS/EGRESS To/From STAGE To PUBLIC HIGHWAY	ALL	24 hour	F	E
	SPECIAL STAGE	Private or Roads Closed by appropriate Legislation	24 hour	F	
CLASSIC TRIALS and ALL OTHER EVENTS USING THE PUBLIC HIGHWAY		White/UCR/ Private	24 hour	B	D
		Yellow	22.00 to 07.00	B	D
		A, B, Habitation & (Yellow 07.00 to 22.00)	24 hour	C	D

Chart 3

All Events on the Public Highway

Requirements for All Events on the Public Highway
No regular assistance organised in advance may be used by Competitors.
No assistance may be expected from the Organisers.
Competitors are responsible for ensuring that they are supplied with fuel, oil, water, etc, even though the Organisers may advise on where these supplies may be obtained.
A car may not be moved other than by its own power except: (a) By a ferry. (b) By outside means for a minimum distance necessary to extricate it from difficulty. (c) By gravity. (d) By its crew. (e) By **Official** assistance/recovery.
Competitors are strongly advised to carry a First Aid Kit, high visibility vests or jackets and, where appropriate, a torch.
The use of in-car cameras on the Public Highway is permitted on Observed Sections only. In all other Sections on the Public Highway the use of in-car cameras is prohibited.

Chapter 18

Karting

CHAPTER 18 KARTING

This Chapter must be read in conjunction with Chapters 1-11 as appropriate.
This Chapter is separated into the following appendices:

- App. 1 Organisers Regulations General
- App. 2 Kart Race Circuits General
- App. 3 Equipment for Events at Kart Race Circuits
- App. 4 Officials and their Obligations
- App. 5 Race Procedures
- App. 6 Short Circuit specific Judicial Provisions
- App. 7 Competitors Regulations including Personal Clothing and Licences
- App .8 General Technical Regulations
- App. 9 Kart Race Technical Drawings with Dimensions

1. Definitions and General Prescriptions

Data Logging Device: recognised as a device that will allow the downloading of information from the Kart. A revolution counter that monitors maximum revs is not considered a **Data Logging Device.**

Kart: a small four wheeled racing **Vehicle** with a rigid frame and no suspension of the wheels. The engine(s) including any electric powertrain driving the rear wheels only and these rear wheels must be joined by a single piece rear axle with no differential action between them. The **Driver** will be seated with feet to the fore.

Kart Category: a **Category** regulating age and may also regulate height and / or weight of the **Driver** in any **Class.**

Kart Class: a **Class** within which **Kart Racing** takes place defined by the engine or other criteria.

Region: A grouping of individual **Recognised Kart Clubs** as recognised for the time being by the **ASN.**

Standard Club Event: Is any **Event** which is run on a Recognised Kart Club's monthly set schedule and which forms a round of the **Club Championship.**

Steel: (in respect of the following regulations): Structural steel or structural steel-alloy meeting the ISO 4948 classifications and the ISO 4949 designations. Only alloy steels having at least one alloy element with a mass content of ≤ 5% are allowed.

2. Championships

2.1. No **Championship** may take place until an **ASN Championship Permit** has been issued.

2.2. The **Notice of Intent** and **Regulations** must be submitted to the **ASN** in accordance with the timescales laid down in the relevant **NCR** (see Ch.4 App.6).

2.3. Any **Championship** for which awards either **Race** by **Race** or as the result of a **Series** of **Races** include cash or goods in lieu of cash or in which a sponsor's name or title is used in connection with the title of the **Championship** or **Series** is deemed a **Commercial Championship** and subject to a **Registration Fee** which will be notified by the **ASN.**

2.4. In the case that a round is cancelled due to reasons of safety or **Force Majeure the Championship Permit holding Club is entitled contrary to** Ch.3 App.10 Art.4.1.d to arrange an alternative date (and if necessary **Venue**) upon which to run the **Event** provided that 85% of the **Competitors** entered for the **Event** agree to the change. Only those entered for the cancelled **Event** may take part in the alternative **Event.**

3. New Kart Classes

3.1. The acceptance by the **ASN** of any new non-gearbox **Kart Class** (except **Bambino)** is subject to the **proposed Class** being currently certified under **ASN Kart Class Homologation Regulations** which are available from the **Technical Department** of the **ASN.**

3.2. New non-gearbox **Kart Classes** (except **Bambino)** will only be homologated at three yearly intervals the next period commencing 01.01.2026. Applications for new **Kart Class Homologations** must be made in writing to the **ASN** by no later than 31st March of the year preceding the next period.

3.3. Exceptionally any **CIK-FIA** recognised and/or **Homologated Class** may be introduced by the **ASN** at any time.

3.4. Only one non-gearbox **Class** per **Category** will be permitted from any single manufacturer.

4. Specific Types of Kart Race

4.1. **An Endurance Kart Race** is a **Kart Race** of a minimum of 60 minutes duration where the need to refuel and / or make **Drivers** stops or changes is an integral part of the **Race**. **Drivers** must have reached their 16th birthday. A group of licensed **Drivers** may be referred to collectively by their **Team** name without the requirement to hold an **Entrant Licence.**

4.2. There are two types of **Endurance Kart Events** and which require different licence grades:

a. Engines which do not exceed 17hp in total per **Kart Drivers** must hold a minimum of a **Kart Clubman Licence.**

b. For engines exceeding 17hp in total per **Kart Drivers** must hold a minimum of a **Kart Interclub Licence**.

4.3. **A Kart Clubman Event** is a **Kart Event** run primarily as entry level **Karting. Competitors** must hold the minimum of a **Kart Clubman Licence.**

4.4. **Senior Kart Clubman**. For age 16 years and over. Engines may not exceed 17hp in total per **Kart**.

4.5. **Junior Kart Clubman**. For age 11 to 16. Engines may not exceed 10hp in total per **Kart**.

4.6. A **Super K-X Event** is a **Kart Race Event** run primarily for entry level low cost club **Karting**. **Competitors** must hold the minimum of an **RS Clubman Licence** endorsed by the **Organising Club** for racing following a competency test. **Organiser's** guidelines are published by the **ASN**.

4.7. A **Kart K-X Event** is an `Arrive & Drive' format comprising of multiple **Championships**, offering a variety of **Events**, designed for both entry level and the more experienced **Kart Competitor**. **Competitors** must hold the minimum of an **RS Clubman Licence** endorsed by the **Organising Clu**b for racing following a competency test.

5. Bambino

5.1. **Kart Teams** are prohibited in the **Bambino Category** with the exception of those specifically approved by the **Organising Club / Championship**. An approved **Team** must:

- hold a valid **ASN Entrant Licence**
- have at least £5 million Public Liability Insurance
- have at least the **Team Manager** with a valid Suitability Check through the ASN.
- provide discounted space with assistance for a new **Driver**(s) at an agreed fee for, at least, the Driver's first Event(s)

5.2. A **Team** is a **Race** legal entity or other racing **Team** operating commercially and hosting **Drivers** and providing any race services or covered accommodation whether receiving financial gain or not where the principal is not also the **PG Entrant Licence** holder.

5.3. **Bambino Event: Time Trial: Pre-Race** training which can only be held on **Circuits** specifically licensed

for **Bambino**. **Drivers** must hold a **Kart Clubman (Bambino) Licence** which they can obtain from their 6th birthday and may continue in **Bambino** until the 31st December in the year of their 8th birthday. Full details and criteria are contained within the **ASN Karting Yearbook.**

5.4. **Bambino Race:** A **Bambino Race** may only be held on **Circuits** specifically licensed for **Bambino Racing** subject to the following:

a. **Drivers** must be at least 6 years of age.

b. **Drivers** must have satisfactorily completed an **ARKS** test.

c. **Drivers** must hold a **Kart Interclub** (**Bambino**) **Licence.**

d. The **Event** format must only provide for timed qualifying heats and final(s).

6. Category Restrictions

6.1. The **Category,** age and weight criteria are mandated below. Regulations within **the ASN Karting Yearbook** may apply further limitations.

7. Class Safety Exemption

7.1. For the **Bambino, Cadet** and **Inter Categories** only the **ASN** may in its entire discretion authorise a **Driver** to remain in the **Category** beyond the **Category** maximum permitted age due to that **Driver's** low weight and / or height. Any approved **Exemption** will only allow the **Driver** to compete at **Interclub** status **Events** with the benefit of that Exemption (Ch.1 Art.1.4).

8. Bambino

8.1. **Pre-Race** training and racing in accordance with the current **ASN Bambino Karting Regulations** for **Drivers** aged 6 -8 years. A **Driver** may not compete until the date of their 6th birthday but may continue in the **Class** until 31st December of the year of their 8th birthday.

9. Cadet

9.1. This is a **Category** for 8–12-year-olds.

9.2. A **Driver** may enter the **Cadet Category** from their 8th birthday or the calendar year of their 8th birthday having proof of satisfactorily completed at least 3 **ASN Bambino Races** (not **Time Trial). Drivers** may continue in the Category until 31st December in the year of their 12th birthday

a. A **Competitor** who holds a **Kart Interclub** (**Bambino Race**) licence may exchange it for a **Kart Interclub Licence** if qualified to enter Cadet. They will be a novice until having satisfactorily completed five **Races.**

9.3. **Drivers** in the year of their 8th birthday meeting a minimum height of 125cm having satisfactorily completed 3 **ASN Bambino** time trials may move to the **Cadet Category** and be restricted to a single venue subject to:

a. Having satisfactorily completed the approved **ARKS** course (Please refer to Ch.6 App.6)

b. The **Competition Licence** application must be endorsed and submitted to the **ASN** by the **Recognised Kart Club.**

c. The **Licence** will be held by the **ASN Recognised Kart Club** and remain valid for their **ASN Permitted Cadet Kart Races** only until the **Driver** has either:

i. reached their 8th birthday; or

ii. obtained the **ASN Stewards** or the **Clerk of the Course** signature on the upgrade card at a minimum of three **Interclub Kart** races.

9.4. Once the **Driver** has reached their 8th birthday they will be eligible to apply for an unrestricted **Interclub Kart Licence.**

9.5. Having moved into the **ASN** Inter or **Junior Category** a **Driver** cannot revert to the **ASN Cadet Category.**

10. Inter

10.1. Category for 10-13 year-olds. A **Driver** may enter the **Inter Category** from their 10th birthday or the calendar year of their 10th birthday with a **Kart National Licence**, and continue until the 31st December of the year of their 13th birthday.

10.2. The minimum **Driver w**eight and height and the class weight will be defined in the **Class Regulations. All** restrictions will be within the parameters of the current **Kart Class Homologation** or **Re-Homologation Regulations.**

10.3. Having moved into the **ASN Junior Category a Competitor** cannot revert to the **ASN Inter Category**.

11. Junior

11.1. Category for 12 to 16 year-olds. A **Driver** may enter the **Junior Category** from the calendar year of their 13th birthday or from their 12th birthday with a **Kart National Licence** and continue until 31st December in the year of their 16th birthday. **Drivers** cannot compete in Gearbox Karts until their 13th birthday (subject to individual **Class Regulations**).

11.2. Having moved into the **ASN Senior Category** a **Driver** cannot revert to the **ASN Junior Category**.

11.3. A minimum **Driver** weight is required in the **Junior Category.** This weight will be defined in **Class Regulations** and must be within the parameters of the current **Kart Class Homologation** or **Re-Homologation Regulations.**

12. Senior

12.1. **A Driver may enter the Senior Category from the calendar year of their 16th birthday** or from their 15th birthday with a **National Licence.** A minimum **Driver** weight is required for any **Driver** below the age of 16 competing in a **Senior Category** except for **International ITE Licence** holders. This weight is defined in individual **Class Regulations.**

13. CIK Classes

13.1. For only **CIK-FIA Classes** the **ASN** may authorise variations to the ages above subject to further limitations as per **Class Regulations.**

CHAPTER 18 KARTING

Appendix 1 - Organisers Regulations General

1. General

1.1. **Organisers** must apply the **Regulations** provided by this Ch.18 and its Appendices and its related **NCR** Chapters.

1.2. A **Kart Race Event** may only be **Organised** by **Clubs** registered and Recognised as **Kart Clubs** by the **ASN.**

1.3. A **Permit** for any **Kart Event** or **Championship** is issued at the sole discretion of the **ASN** and is subject to the **Circuit** having a valid **ASN Track Licence.**

1.4. A maximum of one **International** or **ASN Championship Event Permit** for gearbox and one for non-gearbox **Karts** can be issued on the same weekend.

1.5. **Organisers** must adhere strictly to the **Class** designations referred to in this Chapter and must not in any way modify the title or **Classes** or permit the use of unauthorised engines unless given specific prior permission in writing by the **ASN.**

1.6. Full details of all approved **Classes** are referred to in this Ch.18**.**

2. Parade / Demonstration

2.1. Application may be made to the **ASN** for an extension to an **Organising Permit** to enable a demonstration in accordance with specific criteria available upon request from the **ASN.**

3. Historic Karting

3.1. Application may be made to the **ASN** to be permitted to utilise the provisions of the **CIK-FIA ClasCIK Karting Guidelines**. The **ASN** may amend the **Guidelines** as detailed below. This does not permit anyone to organise **Race Events** for historic Karts under **Permit** by the **ASN.**

3.2. The **ASN** may authorise:

a. **Single-Kart** parade

b. **Multi-Kart** demonstration

c. Eligible **Drivers**

The Driver must reach the following birthday during the calendar year

- 13 years old for a category with a cylinder capacity up to 100cc with a restrictor.
- 16 years old for a category with a cylinder capacity up to 210cc
- 18 years old for any category with a cylinder capacity over 210cc.

4. Classic Karting

4.1. The **ASN** may permit an extension to the period specifications of the **CIK-FIA ClasCIK Karting Guidelines** for **Classic Karts** 1/1/1989 to 31/12/1997. Eligible drivers in accordance with Art.3.2 above.

CHAPTER 18

Appendix 2 - Kart Race Circuits General

1. General

1.1. **Organisers** must apply the **Regulations** provided by this Ch.18 and its **Appendices** and its related **NCR Chapters.**

Circuits

2. Track Licences

2.1. All applications for a **Track Licence** must be submitted to the **ASN** and in conformity with all its requirements from time to time available from the **ASN Safety Department** on written request.

2.2. A digital plan of the **Track** must be lodged with the **ASN** together with the **Application** for a **Track Licence.**

2.3. A new application for a **Kart Track Licence** must be made at least ten weeks before any proposed **Event.**

2.4. If the **Organiser** of an **Event** is a new **Club** having been granted a **Track Licence** then its first three **Events** after being granted a **Track Licence** must be restricted to its own **Club** members and be subject to **ASN** observation.

2.5. **Track Licences** for new **Short Circuits** must conform to **CIK-FIA Regulations** and will only be granted after the **ASN** (and in its discretion **FIA)** inspection.

2.6. Temporary **Tracks** will be subject to **ASN** approval and must conform in all ways to the **Track Licence** issued.

3. Grading

3.1. **Track Licences** will be graded as follows:

a. All status **Events** up to and including **International.**

b. All status **Events** up to and including **National.**

c. for **Interclub Events** only.

d. For **Bambino Events.** A specific endorsement must be details on the **Track Licence** to **Permit** these **Events.**

3.2. If a **Race Venue Track** incorporates a **Short Circuit** those **Tracks** will be subject to individual grading and **Track Licences.**

4. Circuit Categories

4.1. There are four categories of **Track** for **Kart Racing**:

a. **Kart Permanent Tracks** with a lap distance of less than 1500m where the shape can be determined at all times and all protective barriers are permanently in position.

b. **Kart Temporary Tracks** with a lap distance less than 1500m where barriers are not permanently positioned.

c. **Race Venues**: Any **Kart** circuit exceeding 1500m in lap distance and all licensed **Motor Race Circuits.**

d. Indoor **Kart Tracks.**

4.2. Safety precautions must be those approved by the **ASN** for **Kart Events** at that **Track**.

4.3. During **Practice** the number of **Karts** on the **Track** shall not exceed the number permitted in a **Race** by more than 10%.

CHAPTER 18 KARTING

Appendix 3 - Equipment for Events at Kart Race Circuits

The following minimum equipment is mandatory for all **Kart Events:**

1.1. Medical Equipment and Personnel and facilities as mandated by **App.4 to this chapter** and where applicable **Ch.11.**

1.2. **Warning Notices,** tickets and other authorisations for admission to the **Venue** including the pits and paddocks and any **Enclosures** as required by **Ch.3**:**.**

1.3. The following **Signals:**

a. Red lights for starting and stopping a **Race**

b. **National Flag** for start back up

c. Slow Boards of minimum dimensions of 60 x 80cm.

d. Blue

e. White

f. Yellow

g. Yellow with red stripes

h. Green

i. Red

j. Black with orange disc

k. Black and white diagonally split

l. Black and white chequered

m. Green with yellow chevron

1.4. Fire extinguishers (minimum 2kg dry powder) with a manufacturer's or agent's certificate issued prior to the season's certifying that they are in working order. As a minimum, one must be available at the start line two in the paddock in clearly visible positions and one at each **Marshal Post.**

1.5. **Track** cleaning equipment comprising as a minimum two units of:

a. One ordinary shovel.

b. Two brooms.

c. A metal container of 3kg of a suitable cleansing agent for removing oil.

d. Adequate replenishment supplies for **c. above.**

1.6. A public address system available to the **Clerk of the Course** (a hand-held powered megaphone is acceptable as a minimum) for communicating with **Competitors.**

1.7. A **Starter's Sheet** and an **Officials'** signing-on-sheet in the control of the **Event Secretary**. **Competitors** and **Officials** may sign-on digitally if the **Organiser** elects to run the **Event** in this way when the relevant details must be notified in the **Official Documents.**

1.8. An **Official Notice Board** for all official communications, grid positions and **Race** results. The relevant details of the **Official Noticeboard** must be notified in the **Official Documents.**

1.9. Certified calibrated scales and 100kg of certified check weights.

1.10. A calibrated **Noise** meter, microphone and accessories.

1.11. At an **Event** where there is to be transponder and / or light beam timing:

a. The following necessary calibrated equipment must be present:

i. Decoder system for **Transponders Certified** in accordance with **Ch.5 PART A App.7 Arts.18** and **19.**

ii. Transponders **Certified** from the **ASN Approved** list in accordance with **Ch.5 PART A App.7 Arts.18** and **19.**

iii. Light beam equipment **Certified** in accordance with **Ch.5 PART A App.7 Arts.18** and **19.**

b. The following necessary calibrated may be used:

i. A working standalone camera system

1.12. A minimum of one **Small Spill Kit** must be provided in all paddock areas.

1.13. At **Race Venues** the equipment must be to a similar standard to that required for a **Car Race Event**.

CHAPTER 18 KARTING

Appendix 4 - Officials and their Obligations

This Appendix must be read in conjunction with Ch.3 and Ch.5**.**

All Officials must always respect the provisions of Ch.5 as they apply to their respective roles and appointments and proceed on the basis that they are ambassadors for the sport.

1. Officials

1.1. Any **Club** organising a **Karting Event** must appoint the **Officials** listed below and brief them fully prior to the **Event**.

1.2. All **Officials** must sign on before commencing their duties.

1.3. In carrying out their duties **Officials** must not expose themselves to any unnecessary hazard.

1.4. Any **Official** trackside must wear enhanced visibility clothing whilst High Visibility is strongly recommended.

2. Clerk of the Course

2.1. The **Clerk of the Course** must hold a **Licence** valid for the grade of the **Event** at which they officiate.

2.2. The duties of the **Clerk** are those specified in this **Chapter** and Ch.5**.**

2.3. A **Clerk** who has a judicial function shall always respect the relevant provisions of Ch.3 and App.9 to this Chapter.

2.4. A **Clerk of the Course** will normally have only one **Deputy** at any **Event.**

2.5. Details of the upgrading procedure for **Kart Clerks of the Course** are given in Ch.5.

2.6. The **Clerk of the Course** is responsible for observing all **Competitors** at an **Event** where the **Stewards of the Event** are responsible judicial duties in accordance with App.6 of this Chapter and if satisfied with their competence shall sign their **Upgrade Card.**

3. Medical Organisation

3.1. To the extent applicable Ch.11 applies.

3.2. All **International Permit** and **Race Venue Events** must have at least one **Doctor** and two ambulances in attendance.

3.3. One ambulance must be equipped with portable resuscitation equipment and a crew trained in its use.

3.4. It is recommended that a fast rescue car is also available for all **Race Venue Events.**

3.5. At all other **Events** a local authority, St John's, Red Cross or other approved ambulance equipped to a suitable standard and including a portable resuscitation unit with crew trained in its use must be in attendance at all times.

3.6. A **Doctor** or an **ASN**-registered **Paramedic** in accordance with Ch.11 must be present throughout **Practice** and **Racing.**

3.7. It is recommended that if entries exceed 100 or for **ASN Championship Events** there should be two ambulances present or one ambulance and a fully equipped medical centre.

3.8. If only one ambulance is present and it has to leave the **Venue Racing** must not continue until it returns unless alternative suitable transport approved by the Doctor or the chief medical representative is present and available with sufficient trained staff to operate it and the equipment carried.

4. Kart Scrutineer

4.1. The **Chief Kart Scrutineer** must hold a licence (minimum **National** grade) valid for the grade of **Event**. **Licence** grades are mandated at Ch.5**.**

5. Marshals

5.1. The **Clerk of the Course** must ensure that responsible persons are appointed as **Flag, Track** and **Paddock Marshals** and that they are fully briefed as to their duties.

5.2. All **Marshal** posts as detailed on the **Track Plan** must be fully manned and equipped. **Marshal** posts must be properly protected and **Flag Marshals** must always remain within the confines of that protection while any **Race** is in progress.

6. Lap Scoring and Timing

6.1. Manual lap scoring must be carried out at all **Events**. Where transponder timing takes place a working stand-alone camera system under the direct control of the **Chief Timekeeper** for the purposes of lap scoring should be used.

6.2. Where there is no transponder timing the **Chief Lap Scorer** must be named in the **Official Documents** as a **Judge of Fact** in relation to **Race** finishing order.

6.3. Where timing takes place there must be a **Chief Timekeeper** who must hold an **ASN Licence** valid for the grade of **Event** as provided by **Ch.5 App.18 Chart 1**.

6.4. Where timing takes place to an accuracy of 0.001 seconds the **Chief Timekeeper** must be of **Kart National** grade.

6.5. If using a light beam timing must be to an accuracy of not less than 0.001 seconds and the equipment must be certified in accordance with **Ch.5**.

6.6. Transponder timing at **Short Circuit Kart Events** must not be to an accuracy of less than 0.01 seconds.

6.7. Transponders must be from the **ASN Approved** list and used in conjunction with decoders certified in accordance with **Ch.5**.

6.8. The fitment of the transponder must be in accordance with the manufacturer's instructions at a predetermined position on the **Kart** as detailed in the **Official Documents.**

7. Flag Marshals

7.1. **Flag Marshals** are responsible for signalling to **Competitors** and warning them of hazards.

7.2. **Flag Marshals** should not leave their posts to render assistance in the case of an incident.

8. Track Marshals

8.1. **Track Marshals** are responsible to the **Clerk of the Course** for ensuring:

a. The **Track** surface, markings and protection systems are maintained in good order throughout an **Events**.

b. Where alternative routes on **Tracks** exist those not being used are properly indicated.

c. The fire-fighting equipment is readily available and correctly located and that **Track Marshals** are familiar with its operation

d. The **Track** cleaning units are located at suitable points

e. Proper supervision of the removal from the **Track** of any **Kart** which may have stopped on or adjacent to the **Track**

f. All entrances to the **Track** are manned and that no unauthorised person comes within the **Course.**

8.2. If **Enclosures** are not surrounded by fencing **Track Marshals** must be stationed at intervals between all **Enclosures** and the **Track**.

Paddock Marshals

8.3. **Paddock Marshals** must:

a. Maintain orderly conduct in the paddock and / or pit area.

b. Notify **Competitors** of their starting positions

c. Assemble **Competitors** prior to a **Race.**

d. Ensure that no competing **Kart** goes onto the **Track** until it has been approved by the **Scrutineers.**

e. Exclude from the paddock any unauthorised persons.

9. Event Secretary

9.1. The Secretary's duties are detailed in **Ch.5.**

10. Stewards

10.1. The **Organising Club** is responsible for the appointment of two **Event** Stewards whose duties are detailed in **Ch.5..**

10.2. The **ASN** will also appoint a **Steward** whose duties are detailed in **Ch.5.** and **App.6 of this Chapter** and who will also be responsible for observing all **Competitors** (including novices) where the **Clerk of the Course** is responsible for all judicial duties and if satisfied with their competence shall sign their **Licences.**

10.3. **Stewards** must not undertake any additional duties.

CHAPTER 18 KARTING

Appendix 5 - Race Procedures

1. General

1.1. The **Clerk of the Course** may permit a change of make of **Kart Chassis** or engine from those nominated on an **Entry** form provided application is made in writing before the end of scrutineering.

1.2. Only a **Driver** using a scrutineered engine / **Kart Chassis** who has completed a minimum of three laps **Practice** at racing speeds within the official **Practice** period will be permitted to **Race.**

1.3. Only one chassis may be used except when a second chassis is permitted in the **Official Documents.**

1.4. The maximum number of engines which may be used during an **Event** is two unless specifically varied in the **Official Documents.**

1.5. Changing the crankcase constitutes a change of engine.

1.6. Unless otherwise stated in **Official Documents** the **Starter** shall be deemed as a **Judge of Fact** in respect of **Race Starts.**

1.7. The number practising and / or taking part in qualifying **Practice** if applicable at any time shall not exceed the maximum permitted on the **Track** for a **Race** by more than 10%.

1.8. Adequate **Practice** periods must be allotted to all **Classes** which must include sufficient time for **Drivers** requiring observation to be seen.

1.9. Where possible novice and experienced **Drivers** should be allocated separate sessions.

1.10. Exceptionally for **Race Venue Events** 120% of the number permitted to **Race** may **Practice** at a time.

1.11. At no time may non-gearbox and gearbox **Karts Practice** or Race together.

1.12. Due regard must be paid to **Driver** experience and the relative speed of the **Karts** if different **Classes** are on the **Track** at any one time during **Practice**.

1.13. The **Track** or its features or markings may only be changed between the last **Practice** period and the **Event** itself in exceptional circumstances.

1.14. Should it be necessary to make any change following the scheduled **Practice** an additional period of **Practice** must be arranged.

1.15. The starting order in which **Karts** shall be arranged will be determined by:

a. Ballot.

b. Lap times recorded in **Practice**.

c. Order of receipt of entry.

d. Finishing order of a preceding **Race.**

e. As defined in **Official Documents.**

1.16. With the exception of **Kart Clubman Events** where the **Kart Clubman** guidelines apply in all **Races** where the grid position is determined by **Art.1.15.a., c.** or **e.** above novice **Drivers** must occupy the rearmost grid positions. Where timed qualifying is used it shall have the same status as a **Race.**

1.17. The **Pole** position must be on the side of the **Track** that is on the inside of the first corner after the start or as otherwise defined on the **Track Licence** subject to **Art.1.17.a** below.

a. **Championships** may request authority from the ASN to make provision for the pole position **Driver** to elect to take their grid position to the right or left of the **Track** provided that the **Clerk of the Course** is notified on the Pole Position Notice Form as soon as the **Driver** reaches the “Pre-Grid“. This election will only modify the first row of the grid to the exclusion of the remainder of it.

b. The Pole Position Notice Form must be signed by the **Driver** and the **Entrant** responsible for the **Driver** at the **Event**.

1.18. The **Start Line** will be indicated on the **Track** by a painted white line. Optionally (and recommended) **Tracks** may also use the following markings to aid controlled starts (see **App.9 Drawing 13**):

a. Two 2m wide lanes bordered by painted white lines from a point no more than 100m and no less than 50m leading to the **Start Line.**

b. A painted yellow line 25m prior to the **Start Line**. For rolling starts this yellow line will also be indicated by soft cones (one cone on each side of the **Track**).

1.19. When the **Starter** is ready for a **Race** to commence the **Green Signal** must be shown to **Drivers**. A **Marshal** will then display a **Green Signal** which will be the **Signal** for the **Karts** to be released on to the **Track**. After the **Marshal** has removed the **Green Signal** the entrance to the **Track** will be closed and no further **Karts** will be allowed to join the **Track**. Exceptionally the **Official Documents** may permit participation after the removal of the **Green Signal**.

1.20. **Karts** will form up in the assembly area and will be started when authorised by the **Paddock Official** after the **Green Signal** has been shown. **Drivers** will be under **Starter's Orders** from the moment that the **Green Signal** is displayed.

1.21. Each **Track** will establish a 'Safety Line'. Any **Competitor** who having passed that 'Safety Line' receives assistance from anyone other than a signed-on **Official** may be **Disqualified** from the results.

1.22. Starts for **Races** shall be as shown below:

a. 'Le Mans' or any starts other than those specified below are forbidden.

b. **Short Circuit Kart Events** (all classes). A standing start with engines running or a rolling start.

c. **Race Venue Events**. All starts must be slow rolling starts following a formation lap.

1.23. In the case of a rolling start on display of the **Green Signal Karts** will proceed round the **Track** in grid formation at a steady pace to await the starting **Signal**.

1.24. The **Karts** may be preceded by an official **Pace Vehicle.**

1.25. If there is no **Pace Vehicle** the **Driver** in No.1 position will control the speed.

1.26. When the **Starter** is satisfied that the **Karts** are approaching the **Start Line** in correct position and at an acceptable speed the starting **Signal** will be given by extinguishing the red light (or by raising the **National Flag** should a light failure occur). If a further lap is required the red lights will remain on or the National Flag will not be raised.

1.27. Once the **Race** start has been given **Drivers** can break formation but should this occur before the start **Signal** is given i.e. **Drivers** leave the corridors or break formation with the red lights on then a 'false start' penalty will be applied.

1.28. **False / Jump / Standing Start**: A false start occurs when a **Driver** under **Starter's** orders gains an unfair advantage by either:

a. being in an incorrect position on the grid or

b. moving forward from the **Driver's** prescribed position.

1.29. **Breaking formation**: In the case of a rolling start a **Driver** under **Starter's** orders who fails to maintain their corridor or accelerates early or unevenly will be penalised in accordance with **Art.1.30 below.**

1.30. The penalty added to the time taken by the **Competitor** to complete the course shall be the addition of 3 seconds (or 3 places where there is no **Licensed Timekeeper**) for partly crossing the lanes and of 5 seconds for completely getting out of the corridor. This will not incur penalty points. The penalty for accelerating early or unevenly will be 5 seconds or 3 places where there is no **Licensed Timekeeper.**

1.31. Where the optional **Track** markings are used the **Clerk of the Course** must make reference to their use

in the **Drivers** briefing. When used the start **Signal** will not be given before the yellow line. The **Karts** approaching the **Start Line** must remain in formation at approximately half **Race** speed (which will be set by the **Pole** sitter) and be driven within the set of two-metre lines appropriate to their side of the grid. It is an offence to accelerate in any way before the yellow line or drive outside the marked lines (please refer to **App 9 Kart Race Technical Drawings**)

1.32. In the case of a standing start on display of the **Green Signal Karts** will proceed round the **Track** to the designated start line where a Red **Signal** will be shown and they will stop on their allotted grid markings. No start lights will be illuminated.

i. Should a **Kart** fall to the back of the field for any reason on the rolling lap and not be in formation at the display of the yellow **Signal**s at the corners prior to the start that **Kart** must immediately fall back to and start from the rear of the grid.

ii. When the **Starter** is satisfied that the **Karts** are in their correct position they will withdraw the Red **Signal** and point to the start **Signal** which may be illuminated as red lights (this may be in a sequence of Red Lights until they all remain on).

iii. Within a period of 5 seconds the Red **Signal**s will be extinguished to indicate a Race start.

iv. Any movement prior to the Red **Signal**s being extinguished will be judged as a false start and will be penalised with a minimum of 5 second penalty (or 3 places where there is no licensed Timekeeper).

v. If the starter is not satisfied or a **Driver** is unable to take the start they will indicate a false start which means an extra formation lap must be covered.

a. A **Driver** unable to start must remain in the **Kart** and notify that situation by raising an arm.

b. In this case an additional formation lap may be granted; any **Drivers** who have been unable to start will be allowed to get out of their **Karts** and restart by their own means and once the whole field has passed them but

c. They will not be authorised to regain their original position in the formation and will take the start from the rear of the grid in order of arrival. No other **Driver** will be allowed to occupy the place(s) which have remained vacant.

1.33. A yellow board marked “SLOW” in black letters may be introduced by the **Clerk of the Course** at short circuit **Kart** race **Event** to neutralise any on track session (the ‘**Session**’). This procedure will be used only if the **Track** is obstructed, or if **Drivers** or **Officials** are in immediate physical danger, but the circumstances are not sufficient to justify stopping the **Session**. The minimum dimensions for ‘SLOW’ Boards are 60 x 80cm.

a. When the order is given to neutralise the **Session**, all **Marshal** posts must display a single ‘waved’ yellow **Signal** and a SLOW board, which shall be maintained until the neutralisation is over.

b. All **Karts** must slow down to a steady pace and proceed in order behind the leader in tight formation. The leading **Kart** will dictate the pace, at a moderate speed. Overtaking will only be permitted if a **Kart** slows down or stops due to a serious problem.

c. **Karts** may enter the “**Repair Area**” during the neutralisation and may rejoin the **Track** only when authorised to do so by a **Marshal**. A **Kart** rejoining the **Track** shall proceed at a moderate speed until it reaches the end of the line of **Karts**. They will join the end of the line of **Karts** and may not retake their position.

d. When the **Clerk of the Course** is satisfied the problem is resolved and the **Session** is to be resumed, yellow **Signals** will be made stationary at the last two **Marshals** posts. SLOW boards will be maintained. **Karts** will continue in formation at reduced and constant speed maintained by the lead **Kart** until crossing the **Start Line**.

e. The resumption of the **Session** will be indicated by a ‘waved’ green **Signal** at the **Start Line**. Overtaking will remain prohibited until the **Karts** have crossed the **Start Line** at the end of the neutralisation. On approaching the **Start Line** when the green **Signal** is being displayed, **Drivers** may accelerate

only after crossing the yellow line preceding the **Start Line**. Yellow **Signals** and SLOW boards at **Marshals** posts will then be withdrawn and replaced with 'waved' green **Signals**. These **Signals** will be displayed for a maximum of one lap.

f. Each lap completed during the neutralisation will be counted as a racing lap, or if appropriate towards the timed period for the race.

g. If the **Session** finishes during the neutralisation, the **Karts** will take the **Chequered Flag** / **Signal** as usual. Overtaking will only be permitted if a **Kart** slows down or stops due to a serious problem.

2. Stopping of a Race

2.1. The **Clerk of the Course** (or their **Deputy**) may decide to stop a **Race** or **Practice** at any time. Should a **Race** be stopped by the display of red **Signals** the following procedures will apply:

i. Any **Race** stopped before the leader has completed two laps will be declared null and void.

ii. The **Race** will be re-run in its entirety as per **Art.3.1 below**.

iii. All available **Karts** will restart from their original grid positions; the grid may be closed up for any missing **Karts**.

iv. Front fairings may be reset without penalty on the grid.

2.2. If it becomes necessary to remove all **Karts** from the **Track** repairs may be made and all **Karts** that came under **Starter's** orders for the original **Race** will be permitted to start the re-run Race from the dummy grid in their original positions.

2.3. If 2 or more laps but less than 75% of **Race** distance has been completed by the leader the **Clerk of the Course** shall at their discretion decide to:

a. Abandon the **Race.** In which case the **Race** (result) shall be declared as the order of finishing on the last full lap completed by all **Karts** proceeding under their own power when the red **Signal** was first displayed followed in classification by non-running **Karts** on a roll back of laps basis and order of stopping.

OR

b. Consider the **Race** suspended and run it as a two-part **Race.**

i. In this case the **Karts** will be restarted in a single file rolling start with no overtaking before the start line.

ii. After one or more laps under SLOW Board conditions in accordance with **Art.1.33 b. above** the start will be signified by the 'waving' of the **Green Signal** and processes followed in accordance with **Art.1.33 d and e above.**

iii. The starting order for the second part of the **Race** shall be the order at the last full lap completed by all **Karts** still proceeding under their own power when the Red **Signal** was first displayed. Any time penalty will be recorded and added to the final result.

iv. **Drivers** "one or more lap(s) down" shall be put in their correct position i.e. behind the **Drivers** on the same lap as the leader.

v. The **Race** distance shall be the number of laps required to make up the full **Race** distance.

vi. The finishing order of the second part shall be the finishing order of the Race (**Drivers** "one or more lap(s) down" in the first part shall be deemed to have finished the **Race** "one or more lap(s) down" unless they have un-lapped themselves) followed in classification by non-running **Karts** on a roll back of laps basis and order of stopping.

c. If the **Judge of Fact** reports that the front fairing on one or more **Karts** was no longer in the correct position when the **Race** was suspended in all situations a time penalty of 5 seconds will be imposed automatically on the **Driver(s)** concerned and added to the final result. This is not susceptible to **Appeal**. Any front fairing which is subject to a **Judge of Fact** report must be reset on the grid before

the **Race** is re-started.

2.4. If 75% or more of the **Race** distance has been completed by the leader the **Race** will be deemed to have ended. The **Race** results shall be declared as the order of finishing on the last full lap completed by all **Karts** still proceeding under their own power at the time of the first showing of the Red **Signal** was displayed followed in classification by non-running **Karts** on a roll back of laps basis unless **Championship Regulations** specify otherwise.

3. Re-Starting Procedures

3.1. If the **Race** is to be re-run in its entirety or restarted the following procedure will apply:

a. While the **Race** is stopped the whole **Course** will be considered as **Parc Fermé** and no work may be carried out to any **Kart** (except to reset the front fairing in the correct position under the supervision of the **Scrutineers**).

i. Mechanics will not be allowed on the **Course** until permission is given by the **Clerk of the Course**.

ii. Neither the mechanics nor **Incident Marshals** already on the **Track** can approach or touch any **Kart** until permission is given.

iii. When authorised by the **Clerk of the Course** spark plugs may be changed and finger adjustments may be made to the carburettor settings.

3.2. If a **Kart** leaves the **Track** during the stoppage:

a. It will not be permitted to rejoin the **Race.**

b. Any **Kart** not **Racing** at the time of the incident that caused the **Race** to be stopped cannot rejoin the re- started **Race**.

c. **Karts** involved in the incident that gave rise to the stoppage or who subsequently stopped racing because of the incident prior to the Red **Signal** may only re-join the **Race** if the **Clerk of the Course** in consultation with the **Chief Scrutineer** is satisfied that a **Kart** is safe to continue without repair and the **Chief Medical Officer** is satisfied the **Competitor** is fit to continue racing. These **Karts** must start at the rear whether the **Race** is run over the full distance or as a two part **Race.**

d. Those **Karts** that stopped after the incident that gave rise to the stoppage because they were instructed to do so or because the **Track** was blocked may join the restarted **Race** in their proper places.

3.3. For **Events** on **Race Venues** and **Round the House Circuits** the procedure is detailed in **Chapter 12**.

4. Race Finish and Results

4.1. After receiving the end of Race **Signals** all **Karts** must proceed directly to the **Parc Fermé** without stopping giving or receiving any object whatsoever and without any assistance (except that of **Marshals** if necessary).

4.2. Any classified **Kart** unable to reach the **Parc Fermé** by its own means will be placed under the control of **Marshals** who will supervise the movement of the **Kart** to the **Parc Fermé.**

4.3. The method of determining the **Results** of a **Race** must be specified in the **Official Documents** for the **Event** and / or **Championship** as the case may be.

4.4. Where timing is not authorised it is prohibited to publish times or speeds in any **Practice** or **Race Result.**

4.5. Any other publication or display giving this information must clearly be shown and declared as ‘Unofficial’ and ‘For Information Purposes Only’.

4.6. Should the end of the **Race Signal** inadvertently or otherwise be displayed before the leading **Vehicle** completes the scheduled number of laps or before the prescribed **Race** time has been completed the **Race** will nevertheless be deemed to end at the moment the **Signal** is given. If the chequered **Flag/Signal** is given to the leader then the **Result** will be issued accordingly but if the chequered **Flag/Signal** is first given to a **Competitor** other than the leader then the **Result** should be given at the end of the last completed lap

of the leader. Should the end of the **Race Signal** be inadvertently delayed the **Race** will nevertheless be deemed to finish at the correct moment and **Competitors** be classified accordingly in the **Results**.

5. Parc Fermé

5.1. The **Parc Fermé** shall be sufficiently large and secure so that no unauthorised persons can gain access. The location of **Parc Fermé** at the **Venue** must be specified in the **Official Documents** by reference to a plan.

5.2. **Officials** may require a **Kart** and / or **Driver's** personal equipment to be moved to a designated location and there remain under **Parc Fermé** controls and condition.

5.3. **Parc Fermé** restrictions and permissions must be specified in the **Official Documents.**

5.4. Only authorised **Officials** may enter **Parc Fermé** and inspect a **Kart** and **Driver's** personal equipment and no intervention on a **Kart** or **Driver's** personal equipment is allowed by any **Driver** or person however associated with the **Driver's Entry** unless authorised by such **Officials** pursuant to **Art.5.3 above.**

5.5. When the **Parc Fermé** is in use **Parc Fermé** regulations apply in the area between the **Finish Line** and the **Parc Fermé** entrance.

6. Signals

6.1. Red lights are mandatory for the starting **Signal**.

6.2. The **National Flag** should only be used as a starting **Signal** if the lights fail.

a. For a rolling-start the **Karts** start when the **Signal** is raised

b. For a standing start the **Karts** start when the **Signal** is dropped.

6.3. A **Green Signal** with Yellow chevron indicates a false start.

6.4. A **Green Signal** may be used to indicate either a formation lap or the end of a yellow **Signal** zone on the **Track** or per Art.11.5.f below.

6.5. Yellow **Signals**

a. A stationary Yellow **Signal** shall be shown to warn of an incident or hazard after that **Marshal Post**. This **Signal** means danger slow down sufficiently to ensure that full control of the **Kart** can be retained. No overtaking.

b. Yellow **Signal** – 'Waved' means: Great danger. Slow down considerably. Be prepared to suddenly change from the projected racing line or take other evasive action including stopping if necessary. No overtaking.

c. Yellow **Signal** with Red Stripes may be used to indicate slippery surface ahead and if 'waved' then imminent.

6.6. Red **Signal** shall be displayed to immediately bring all racing to a stop where an incident has occurred necessitating **Marshals** to go on Track. **Karts** shall be directed by **Marshals** to either return with caution to the grid or to **Parc Fermé** as directed by the **Clerk of the Course** or the **Race Director**. No overtaking is permitted and **Drivers** must be prepared to stop at any time.

6.7. Blue **Signal** may be displayed as a static **Signal** to indicate to the **Driver** of a **Kart** that another **Competitor** is following close behind of as a 'waved' **Signal** is trying to overtake.

6.8. Black and White diagonal **Signal** may be displayed to warn a **Driver** as to **Driving Standards** and may give rise to penalties or the Black **Signal**.

6.9. Black **Signal** may be displayed to a **Driver** for a breach of **Driving Standards** or for **Technical** irregularity and required the **Driver** to stop in pits or **Parc Fermé** at the end of the lap on which it is displayed and must report immediately to the **Clerk of the Course**.

6.10. Black **Signal** with Orange disc and **Kart** number may be displayed to indicate to the **Driver** concerned that

there is a mechanical failure affecting the **Kart**. The **Kart** must be driven immediately to the pits or **Parc Fermé** for examination by a **Scrutineer**.

6.11. Black and White Chequered **Signal** shall be displayed to end a competitive or other session other than where a Red **Signal** has been deployed.

CHAPTER 18 KARTING

Appendix 6 - Short Circuit specific Judicial Provisions

1. Clubman Short Circuit Kart Events

1.1. The **Clerk of the Course** is responsible for all judicial duties with the exception of **Events** specifically authorised by the **ASN** for the **Stewards of the Event** to have **Judicial** responsibility in accordance with **Art.2.1 below.**

1.2. Neither the decision for imposing any penalty nor the penalty itself during any timed qualifying or heats is eligible for **Appeal**. Where the **Clerk of the Course** is satisfied with the evidence presented and for decisions issued before the relevant end of session **Signal** is shown imposing time or place penalties only no formal **Hearing** is required.

1.3. In respect of the final(s) the **Stewards of the Event** may hear a validly lodged **Appeal** where permitted against sporting matters determined by the **Clerk of the Course**. However there is no right of **Appeal** to the **National Court** against any sporting decision of the **Stewards of the Event** OR against any **Eligibility Decision**.

1.4. **Clubman Status Kart Event**s may operate the **CIK Judicial** process at **Arts.2.2 - 2.4 below** where specific authority has been requested by the **Organiser** and has been given by the **ASN** for the purposes of the **Event Permit**. Such **Permission** must be clearly notified in the **Official Documents** for the **Event**.

2. Interclub and above status

2.1. The **Stewards of the Event** are responsible for all **Judicial** duties.

2.2. Neither the decision for imposing any penalty nor the penalty itself is eligible for **Appeal**. Where the **Stewards of the Event** are satisfied with the evidence presented and for decisions issued before the relevant end of session **Signal** is shown imposing time or place penalties only. No formal **Hearing** is required.

2.3. Any penalty resulting from a **Judge of Fact** statement may be imposed directly by the **Clerk of the Course**.

2.4. **Interclub Status Kart Event**s may operate the **Clerk of the Course Judicial** process at **Art.1.1 above** where specific authority has been requested by the **Organiser** and has been given by the **ASN** for the purposes of the **Event Permit**. Such **Permission** must be clearly notified in the **Official Documents** for the **Event**.

3. Variation to Technical Non-Compliance Procedures

3.1. When a non-compliance report has been issued by a **Technical Official** who is listed in the **Official Documents** as a **Judge of Fact**, and is issued and signed in accordance with the procedures detailed in **Ch.2 App.8**, **Competitors** shall be able to waive their right to a **Judicial Hearing** when the non-compliance is not contested.

3.1.1 Any such waiver must be clearly indicated via completion of the relevant section on the non-compliance report, including a signature from the **Competitor** (or **PG Licence** holder or **Entrant** where appropriate). The **Judicial Officials** are still required to issue a **Decision** imposing the relevant penalty which shall be provided to the **Entrant** via the usual means.

CHAPTER 18 KARTING

Appendix 7 - Competitors Regulations including Personal Clothing and Licences

1. General

1.1. This Appendix must be read in conjunction with the general text of this Ch.18 and the related Appendices. Chapters 1, 2, 6, 9 and 12 are of application.

1.2. **Competitors** must report for signing-on and scrutineering at the time specified in the **Official Documents** or risk being fined or **Disqualified**. Signing on may be managed digitally by the **Organisers** and then the details must be set out in the **Official Documents.**

1.3. Presentation to the **Scrutineers** of a **Kart** and the **Driver's** personal protection equipment is a **Declaration of Conformity** with all applicable **Regulations.** There is no right of **Appeal** to the **National Court** in respect of an **Eligibility Decision** made at the **Event** or where a **Kart** or any component of it is sealed at the **Event** for subsequent examination other than at the **Event.** See App.6 to this Chapter.

1.4. No **Kart** may be driven in any **Competition** (to include any qualifying, qualifying practice or timed qualifying) until it has been inspected, passed and logged during a scheduled pre-event scrutineering session by an **ASN Scrutineer** appointed for that role at the **Event**.

1.4.1. Additionally, no **Driver** may drive in **Practice** or in a **Competition** until their Personal Safety Equipment (PSE) has been inspected and passed during a scheduled pre-Event scrutineering session by an **ASN Scrutineer** appointed for that role at the Event.

1.5. In addition to signing-on the following items must be produced for approval on demand of an **Official** of the **Event:**

a. Applicable **Licence** of the appropriate grade.

b. **Club Membership Card** (if appropriate).

1.6. For all **Events** except **Bambino** the **Clerk of the Course** in consultation with the **Stewards** will designate the **Race** as follows:

a. DRY – All **Competitors** must use dry tyres.

b. OPEN – **Competitors** have the choice of tyres (i.e. wet or dry).

c. WET – All **Competitors** must use wet tyres.

1.7. Wet tyres are defined in App.8 to this Chapter.

a. At no time may a **Kart** be fitted with a mixture of wet and dry tyres.

b. Tyres shall only be those defined in the **Class Regulations.**

1.8. **Competitors** must obey the **Signals** detailed in App.5 to this Chapter.

1.9. All **Karts** that take the start by crossing the start line under their own power will be classified as a finisher on a roll back of laps basis.

1.10. Where the **Official Documents** so provide a finisher may have to complete a certain designated percentage of a race in order to be classified as a finisher.

1.11. Any **Driver** leaving the **Track** more than twice for whatever reason may be **Disqualified** from the **Race.**

1.12. Where a **Driver** consistently drives with a wheel off the **Track** or leaves the **Track** this will be a breach of **Regulations** and the **Driver** may be penalised at the discretion of the **Clerk of the Course.**

1.13. Once a **Race** or **Practice** session has started **Karts** may only be worked upon in a place of safety.

1.14. Refuelling during a **Race** is forbidden unless permitted by the **Official Documents.**

1.15. Any **Driver** receiving outside assistance other than by an **Official** between coming under starter's orders and the end of the **Race** may be **Disqualified** from the results at the discretion of the **Clerk of the Course.**

1.16. All transmission or communication of data whether verbal or electronic between a moving **Kart** and the **Kart's Entrant** or **Team** is only allowed in the following circumstances:

a. If officially sanctioned cameras and other recording devices and transponders are fitted as required by the **Organisers** of a specific **Event** as specified in the **Official Documents.**

b. Voice communication in **Endurance Races** where the **Official Documents** specify the use of relevant equipment which must be appropriately licensed.

c. A single burst of timing data from the **Kart** as it passes the receiver.

d. Where the **Driver / Competitor** has an **ASN** approved information system that receives timing data and / or instructions or warnings which is under the direct control of the **Clerk of the Course** or **Chief Timekeeper.**

1.17. For **Short Circuit Karting** only engines must not be run in the pits or paddock. The **Chief Scrutineer** may permit a **Competitor** to start their engine in a designated area only as identified by the **Chief Scrutineer.**

2. Track Regulations and Driving Standards

2.1. Any **Driver** intending to leave the **Course** or to enter the pits shall **Signal** the intention to do so in good time and be satisfied that it is safe to do so.

2.2. The **Driver** of any **Vehicle** leaving the **Track** because of being unable to maintain racing speed should **Signal** the intention to do so in good time and is responsible for ensuring that the maneuver is carried out safely and as near as possible to a point of exit.

2.3. Should a **Kart** stop somewhere other than in the pit lane it must be moved as soon as possible so that its presence does not constitute a danger or hinder other **Drivers**. If the **Driver** is unable to move the **Vehicle** marshals may assist. If such assistance results in the **Driver** re-joining the **Race** this must be done without committing any breach of the **Regulations** and without gaining any advantage.

2.4. No **Kart** able to proceed under its own power shall be stopped either on the **Track** or the verges of the **Course** but shall proceed to the pits or paddock unless in doing so causes a hazard to other **Competitors.**

2.5. A **Kart** alone on the **Track** may use the full width of the **Track.**

a. However as soon as it is caught by a **Kart** which is about to lap it the **Driver** must allow the faster **Driver** past at the first possible opportunity.

b. Any **Driver** who appears to ignore the blue **Signals** will be reported to the **Clerk of the Course** or **Stewards.**

c. Overtaking according to the circumstances may be carried out either on the right or on the left. In response to each attempted overtaking maneuver no more than one change of direction to defend a position is permitted.

d. Any **Driver** moving back towards the racing line having earlier defended position off-line must leave at least one **Kart** width between their own **Kart** and the edge of the **Track** on the approach to the corner.

e. Manoeuvres liable to hinder other **Drivers** such as crowding of a **Kart** beyond the edge of the **Track** or any other abnormal change of direction are strictly prohibited.

f. Any **Driver** who appears guilty of any of the above offences may be reported to the **Clerk of the Course** or **Stewards** and penalised.

2.6. **Drivers** must use the **Track** at all times and may not leave the **Track** without a justifiable reason. For the avoidance of doubt:

a. The white lines defining the **Track** edges are considered to be part of the **Track**.

b. A **Driver** will be judged to have left the **Track** if any part of the contact patch of the tyre of the **Vehicle**

goes beyond either the outer edge of any kerb or the white line where there is no kerb.

2.7. Should a **Kart** leave the **Track** for any reason and without prejudice to Art.2.9 below the **Driver** may re-join. However this may only be done when it is safe to do so and without gaining any advantage.

2.8. Causing a collision with another **Kart** and / or repetition of serious mistakes or the appearance of a lack of control over the **Vehicle** (such as leaving the **Track**) will be reported to the **Clerk of the Course** and may entail the imposition of penalties up to and including the **Disqualification** of any **Driver** concerned.

2.9. It is not permitted to drive any **Kart** unnecessarily slowly or erratically or in a manner deemed to be potentially dangerous to other **Drivers** at any time.

2.10. Breaches of Art.2.6 above may be reported and/or determined only by:

a. A duly appointed **Judge of Fact** and/or

b. **Senior Officials** through the use of suitable equipment under the control of the **Organisers.**

2.11. Breaches of **Art.2.6** may be penalised as follows:

a. In qualifying the lap on which the breach occurred should be disallowed. Note should be made on the result sheet of any times disallowed.

2.12. During races breaches of **Art.2.6 above** will be penalised in accordance with the following scale of penalties:

a. 1st breach – no penalty

b. 2nd breach – warning **Signal**

c. 3rd breach – a 5 second penalty added to **Race** time

d. 4th breach – a further 10 second penalty added to **Race** time

e. 5th breach – 1 lap penalty in addition to the proceeding time penalties

f. 6th breach – Black **Signal**

g. Care should be taken to ensure that all **Signals** (flag and / or **Light Board** and **Board**) should where possible have been displayed to the **Driver** concerned before moving up the penalty scale. All penalties applied should be noted on the result sheet.

2.13. No competing **Kart** shall be driven in the reverse direction of the **Track** except for the minimum distance to remove it from an unexpected situation and then only under official supervision.

Clothing

3. Crash Helmets

3.1. Crash helmets bearing the **ASN Approval Sticker** must be worn at all times during training and **Practice** and **Competition.**

3.2. The user must ensure that the helmet is to a standard specified in the current **ASN NCR** and that it fits and is secured properly and that it is in a serviceable condition. Refer to Ch.9.

3.3. Full face helmets complete with visor are mandatory.

3.4. Visors must be manufactured by the helmet manufacturer and must not impede vision.

3.5. For helmets with 8858-2010 Helmet M6 anchorages (FHR attachment points), the M6 anchorages must not be fitted in Karting for safety reasons.

3.6. Any other modification or addition of non-approved accessories (for example, helmet cameras, visors, etc) will render any **ASN** and / or **FIA** approval of the helmet invalid.

4. Gloves and Suits

4.1. Complete gloves (not mitts or gloves with open backs) and boots (which must cover and protect the ankles) must be worn at all times.

4.2. Trailing or loose scarves are not permitted.

4.3. For **Race Venue Kart Events** all **Drivers** must wear leather suits, suits approved to **FIA Standard** 8877-2022 Grade 2, or suits approved to EN17092 Class AAA.

4.4. For **Short Circuits** only leather suits or suits of a recognised **CIK Homologation** standard per Ch.9. are acceptable.

4.5. Leather suits must comply with current **CIK-FIA Regulations** and have a minimum thickness of 1.2mm measured at any part of the suit.

4.6. All clothing must be securely fastened at wrists and ankles and neck and must be adequate to minimise abrasions.

4.7. **Drivers** may wear two-piece suits providing they are zipped together and confirm with **Arts. 25** to **28 above.**

4.8. Correctly fitted wet-weather suits specifically designed for this purpose may be worn over an approved **Kart** suit in wet weather.

4.9. Driving suits helmets visors and all other protective clothing must be presented for inspection by the **Scrutineers** on demand including in **Parc Fermé**.

4.10. The only acceptable **CIK-FIA** homologated suits are those to standard No. 2001-1 or No.2013-1 level 1 or 2 or those to FIA Standard 8877-2022 Grade 1 or 2. Examples of the **CIK-FIA** homologation labels are shown in App.9 Drawing 2.

5. Kart Licences – See Ch.6

For information on **Licence** validity see the chart of Minimum Acceptable **Licences** in Ch.6**.**

5.1. **Kart Competition Licences** except **Kart Clubman Licences** are issued to **Competitors** from the age of six. There are five grades:

a. **Interclub**

b. **National**

c. **International ITG**

d. **International ITF**

e. **International ITE**

5.2. **Entrant Licences** will not be issued to persons under 18 years of age.

5.3. Retaining and upgrading procedures are set out in Ch.6**.**

5.4. Except in the **Bambino Class** or **Super KX** Events, a **Competitor** will be considered as a '**Novice**' and must use **Novice** number plates in accordance with App.8 Art.30.10 and for **Race Venue Kart Events** a **Novice Cross Plate** is required (yellow square on the rear of the Kart dimension 7 x 7 inches with a black diagonal cross with strokes 6 inches long and 1 inch wide) until the **Driver** has obtained six **Kart Race** signatures from **ASN Stewards** or a **Clerk of the Course** per App.4 Art.2.6 to this Chapter. Completion of the **ARKS Course** as provided by Ch.6 will constitute one of the six signatures. One of these six signatures may have been obtained at a NatSKA **Event** held under an **ASN Permit**. Thereafter the **Driver** can continue to compete on an **Interclub Licence** or can upgrade to a **National Licence** in accordance with Ch.6 App.6 but will no longer be considered a **Novice.**

5.5. A valid **Licence** must be produced at signing-on at all **Events.**

5.6. **Race Venue Event Licences**

a. The **Driver** may either produce a **Kart Licence** specifically endorsed valid for **Race Venue Karting** or a **Car Race Licence** see the chart of **Minimum Acceptable Licences** in Ch.6**.**

b. New **Competitors** must be able to demonstrate that they have either undertaken their **ARKS** test

at a **Venue Licensed** for **Race Venue Karting** or having taken the **Short Circuit ARKS** test must demonstrate their experience to the satisfaction of the **Clerk of the Course** or an **ARKS Instructor** during **Practice** at a **Race Venue Kart Event**. New **Drivers** will be considered as **Novices** and must carry **Novice** plates until they have received four signatures from the **Clerk of the Course** for competing successfully at **Race Venue Kart Events.**

c. **Drivers** in Division 1 will require the minimum of a **Kart National Licence.**

5.7. For **Competitors** under the age of 18 years a **PG Entrant Licence** is required Ch.6 applies.

6. Category Restrictions

6.1. The **Category,** age and weight breaks are provided in the general text of this Ch.18. Regulations within App.10 may apply further limitations.

7. General Conduct and Social Media

7.1. All **Competitors** by applying for and obtaining a **Licence** from the **ASN** and by **Entering** and competing in any **Race** and / or **Championship Event** or other **Event** which relies upon the **Competitor** holding an **ASN Licence** undertake to respect and comply with all Codes of Conduct published by the **ASN** in relation to their general behaviour and conduct and of those connected to their **Entry** or participation including engagement with any social media platform all which codes are hereby given **Regulatory** effect. Any breach of this **Regulation** may lead to suspension of **Licence** by the **Stewards of an Event** or the temporary or permanent suspension and / or withdrawal of any **Competitor's Licence** by the **ASN** and / or referral to the **National Court.**

8. Breaches of Regulations

8.1. Any breach of these **Regulations** or of any applicable **NCR** may be subject to the applicable **Judicial Procedures** under Ch.2 and / or App.6 to this Chapter.

CHAPTER 18 KART RACING

Appendix 8 - General Technical Regulations

This Appendix must be read in conjunction with App.9 (Drawings) and App.10 (Class Regulations).

All **Karts** must comply with these **Technical Regulations**.

Modification, addition, variation or tuning other than specifically permitted in these Regulations is prohibited. Anyone requiring clarification or definitions concerning the Technical Content of these **Regulations** should apply in writing to the **ASN**.

The approval of a **Kart** or component is an indication of the acceptance solely for the purpose of these **Regulations** and is not to be taken as a guarantee or warranty as to the standard of its design or manufacture or its fitness or suitability for any use to which it may be put.

1. General

1.1. The **Scrutineer** must be satisfied that a **Kart** is safe is of an adequately strong construction does not include any temporary components and presents no undue hazard to its **Driver** or to other **Competitors**.

1.2. Steering brakes and wheels must be adequate for speeds that are likely to be attained.

1.3. Rear view mirrors are forbidden.

1.4. Drive-by-wire and traction control devices are forbidden.

1.5. The use of titanium or magnesium is prohibited.

2. Chassis Frame

2.1. The **Chassis Frame** must be constructed from magnetic **Steel** tubing and be permanently marked with a unique number in an easily accessible position.

2.2. Cross-section is free.

2.3. The **Chassis Frame** must be of one-piece construction either welded or brazed.

2.4. Any form of **Chassis Frame** control which includes pivots, dampers or similar devices is prohibited. The addition of bolt-in torsion and / or stiffness bars is specifically permitted subject to **Class Regulations.**

2.5. No additional holes for lightening or any other purpose (except those required for seat fixing) may be drilled in the **Chassis Frame** tubes.

2.6. Only those holes shown in the manufacturer's homologation or in a manufacturer's official replacement parts list will be allowed.

2.7. Any replacement of original components and fixings must be fit for purpose.

2.8. No part of the **Kart** other than the bolts or clamps fixing the floor tray, the engine, the seat and seat stays or the brake discs, the front kingpin bolts, the sprocket, the wheels, the seat and the tyres may protrude below the bottom of the main longitudinal **Chassis Frame** tubes. The floor tray may be clamped direct to the lower edge of the main longitudinal **Chassis Frame** tubes.

2.9. Independent components fitted to protect the underside of the **Chassis Frame** tubes which may make contact with the ground are prohibited unless they are of a non-metallic type and of a design specifically approved by the **ASN**. (Note: Engine clamps, battery box clamps and brake disc protectors correctly positioned are exempt).

3. Dimensions (Excluding Cadet Inter and Bambino Classes)

3.1. **Wheelbase**

a. Non-Gearbox and KZ: Minimum 1010mm maximum 1070mm unless specified in **Class Regulations**.

b. Gearbox (except as specified in **Art.20.a** above): Minimum 1010mm (250cc and above: 1060mm) maximum 1270mm.

3.2. **Track** – Minimum two-thirds of the wheelbase.

3.3. **Overall length** – Maximum 1820mm without a front and/or rear fairing. 1880mm for 210 and 250 Gearbox. 2100mm including bodywork for all Gearbox when in **Race Venue Event trim**.

3.4. **Overall width** – All classes unless specified in **Class Regulations** Maximum 1400mm.

3.5. No part of the **Kart** can protrude outside the quadrilateral formed by the front fairing the wheels and the rear wheel protection nor be higher than 650mm from the ground (except for a structure solely designed as a head-rest).

4. Flooring

4.1. There must be a floor made from suitably rigid durable material that stretches only from the central strut of the **Chassis Frame** to the front of the **Chassis Frame** unless specified in **Class Regulations** and for **Karts** in **Race Venue Event** trim when the floor must be at least from the central strut of the **Chassis Frame** to the front of the **Kart**.

4.2. The minimum thickness of the floor tray must be 1.4mm for metallic 1.5mm for composite and 3mm for plastic.

4.3. The floor tray must be flat with any deviation allowed upwards and not downward.

4.4. The floor must be edged on each side with a tube or rim to prevent the **Driver's** feet from sliding off the floor.

4.5. If the floor is perforated on the horizontal surface with the exception of a hole to access the steering column fixing the holes must not have a diameter of more than 10mm and they must be apart by four times their diameter as a minimum.

4.6. It is permitted to drill additional holes for the specific purpose of mounting such items as pedal heel-stops ballast sensors and fuel tank provided that the holes are restricted to the minimum size and number required to meet the purpose. Holes must not cause undue weakening of the floor tray at critical points.

4.7. It is permitted to use floor trays with decorative holes or slots so long as they are provided by the manufacturer and that the holes are in the raised sector(s) of the tray.

4.8. Mechanical fixings with more than three threads protruding on the underside of the floor tray are not permitted.

5. Suspension and Wheels

5.1. Any method of suspension including elastomeric material or by pivots is prohibited.

5.2. Wheels must be equipped with pneumatic tyres (with or without tubes) and the front wheels / hubs must be fitted with rolling element bearings.

5.3. Wheels which have been cut and welded are prohibited.

5.4. The attachment of the wheels to the axles / hubs must incorporate locking pins or self-locking nuts.

5.5. The requirement for wheel retaining locking nuts or secondary locking devices is waived for **CIK-FIA** Homologated wheels and their associated fixings.

5.6. Hubs with a single retaining bolt feature must not protrude beyond the end of the axle unless designed for that purpose and must incorporate a retaining device.

5.7. Extended hubs with one or two retaining bolts designed to overhang the end of the axle are permitted.

5.8. Any hub with an overall length (excluding wheel studs) of less than 60mm must not overhang the ends of the rear axle.

5.9. No form of hub nave plate is permitted on the wheel.

5.10. Tyre bead retention pegs are permitted in all classes.

5.11. For **Race Venue Events** all wheels must be fitted with some form of bead retention inside and outside. Bead retention as a minimum is defined as a wheel with a minimum of a 0.5mm raised lip on the inner edges of the tyre housing.

5.12. For all gearbox **Karts** both rear outer rims must in all cases incorporate additional bead retention comprising three pegs at equidistant positions. Applicable to wet and dry tyres.

6. Tyres

6.1. When inflated on the wheel rims tyres must not exceed the following maximum external diameters:

a. Bambino / Cadet / Inter: front 260mm and rear 290mm

b. Superkart: front and rear 350mm

c. All others: front 280mm and rear 300mm

6.2. Minimum external diameter must not be less than 222mm.

6.3. Tyres for all Classes must be as detailed in the **Class Regulations**.

6.4. All tyres designated for a specific **Class** must be identical in specification to the samples that have been tested and selected. Control tyres may be held by the ASN as a reference in the event of any dispute.

6.5. Tyres must be freely available as single units to the open market in the UK so that customers are not forced to buy either complete sets or other equipment in order to purchase a particular tyre.

6.6. To qualify as a wet tyre tyres must be moulded in such a way as to ensure that grooves are created to leave a minimum of 60% and a maximum of 85% of the total surface area as a raised tread pattern. The grooves must have a minimum depth of 2mm at race start.

6.7. Hand cutting of all tyres is prohibited.

6.8. Remoulded tyres are prohibited.

6.9. Heating of tyres by any method or their treatment by any chemical substance is prohibited. For the avoidance of doubt no manner of abnormally raising the temperature of the tyres/wheels above the natural ambient temperature is allowed.

6.10. Any **Competitor** found to be using chemical treatment on tyres in contravention of **Regulations** (Art.6.9 above), may in addition to any other penalty be referred to the **ASN** for further action (Ch.8 App.3 Art.7.2).

6.11. Mechanical removal of accumulated rubber debris is permitted.

6.12. The interior of the tyre (space between the rim and the internal part of the tyre) must be filled only with air or nitrogen.

6.13. For all gearbox **Karts** valve caps must be fitted to all valves at the start of each race or Practice session.

7. Brakes

7.1. Non-gearbox **Karts** must have effective brakes acting on the rear wheels only unless specified in **Class Regulations**.

7.2. Gearbox **Karts** must have brakes operating on all four wheels with independent front and rear systems which must be hydraulic. Should one of the systems fail the other must guarantee braking on two front or rear wheels.

7.3. Master cylinders must be fitted in a position safe from impact at least 150mm behind the front bumper or to the rear of the pedals.

7.4. Hydraulic pipes must be securely fitted to the **Chassis Frame** upper sides and be protected against damage.

7.5. All **Karts** must have an effective dual connection between the brake pedal and caliper if mechanical and

between the pedal and master cylinder if hydraulic.

7.6. Where there is a dual linkage between master cylinders the mandatory requirement for a secondary dual connection is waived.

7.7. The prime connection may be either solid or cable operated with a secondary safety cable set slightly looser to act as a back up in case of failure.

7.8. Drum brakes are not permitted.

7.9. Brake discs must be made from ferrous material.

7.10. When a cable is used a minimum thickness of 1.8mm is mandatory.

7.11. If the brake disc protrudes below or is level with the main **Chassis Frame** tube nearest to the ground then an efficient rear brake disc protective pad (in Teflon, Nylon, carbon fibre, Kevlar or Rilsan) is mandatory in all **Categories** (except **Gearbox Classes** unless specified in **Class Regulations**). This protection must be placed laterally in relation to the disc in the longitudinal axis of the **Chassis Frame** or under the disc. It must be located within 120mm of the centreline of the brake disc.

8. Steering

8.1. The **Kart** must be controlled by a steering wheel with a continuous rim not incorporating any reflex angles in its basic shape.

8.2. The upper and lower one third of the circumference may be straight or of a different radius to the rest of the wheel.

8.3. Any device mounted on the steering wheel must not protrude by more than 20mm from the plane forward of the steering wheel (see **App.9 Drawing 11**) and must not have sharp edges.

8.4. It is recommended that the minimum diameter for a steering wheel is not less than 300mm across its widest section.

8.5. Steering wheels with flat handgrips are acceptable.

8.6. Flexible steering controls by cable or chain are prohibited.

8.7. All parts of the steering must have a method of attachment offering maximum safety (split pins, self-locking nuts or burred bolts).

8.8. The fitting of a steering lock is not permitted when the **Kart** is being driven.

8.9. The steering column must have a minimum diameter of 18mm and a minimum wall thickness of 1.8mm. It must be a hollow tube and be constructed from magnetic **Steel.**

8.10. All **Karts** must have the steering column mounted in such a way that even if the bottom retaining fastening is removed it cannot pull free from its lower bearing.

9. Stub Axles

9.1. The use of chromium-plated stub axle assemblies is not permitted for any 250cc Gearbox **Classes**.

10. Seating

10.1. It is recommended that the seat be made of a fire-retardant material.

10.2. The seat must be rigidly located on the **Chassis Frame** and designed to securely locate the **Driver** without movement relative to the **Chassis Frame** when cornering or braking.

10.3. It is mandatory that all seats comprise metal or nylon reinforcement at all the anchorage points between the seat supports any additional seat stays and the seat.

10.4. Reinforcements must have a minimum thickness of 1.5mm and a minimum surface area of 130mm2 or a minimum diameter of 40mm.

10.5. All supports must be bolted or welded at each end.

11. Pedals

11.1. The pedals must never protrude forward of the **Chassis Frame** or bumper.

11.2. The accelerator must be operated by a pedal equipped with a return spring.

11.3. Any device linking the accelerator and brake pedals such that either of them may be prevented from being independently depressed partially or fully is prohibited.

11.4. For Karts in **Race Venue Event** specification the brake pedal and all the parts operating the master cylinders must be made of steel and must be strong enough to withstand the forces applied.

12. Exhausts

12.1. The exhaust system must exit behind the **Driver** and must not exceed a height of 450mm.

12.2. The terminal part of the silencer must not cross the quadrilateral formed by the outside of the wheels and the front and rear bumpers and must not present a hazard.

12.3. The Kart must have protection to prevent any contact between the exhaust system and the **Driver** when seated in the normal driving position.

12.4. Unless specifically authorised in **Class Regulations** exhaust lengths may not be varied whilst the **Kart** is in motion. Any such system must be failsafe in operation not present a hazard and incorporate a measurable reduction in sound level.

12.5. Intake and exhaust silencing is mandatory.

12.6. Engines must be prepared and equipped to meet or better noise level requirements.

12.7. **Event Organisers** and venue operators may impose more strict levels according to their own environmental requirements. Such additional restrictions must be published in the **Official Documents** and be approved by the **ASN.**

12.8. The requirements for noise control Officials (Environmental **Scrutineers**) are detailed in **Ch.5 Part A App.6 Art.6**.

13. Noise Testing

13.1. Effective exhaust and induction muffling is mandatory on all **Karts** so that noise level regulations are complied with.

13.2. The responsibility rests with the **Competitor** to comply with the noise regulations.

13.3. **Scrutineers** will check all intake and exhaust silencers for professional construction and secure fixing.

13.4. Any **Competitor** losing a silencer during a race will be immediately shown a black **Signal**.

13.5. Intake silencers sealed to the carburettor intake so that all air entering the carburettor passes through the intake silencer are mandatory for all **Classes.**

13.6. Details of specific silencing requirements and of approved silencers are given in the **Kart Yearbook**.

13.7. In all classes all air entering the intake silencer must do so without the addition or proximity of any device that may direct an increased flow of air from the forward movement of the **Kart** towards the inlet.

13.8. The use of acoustic measures such as inserts between head and cylinder fins to reduce noise in air cooled classes is permitted unless prohibited by **Class Regulations**.

13.9. Noise testing must be carried out at all **Kart Race Events** using equipment equal to or better than the minimum requirements of G.7.8 which should be calibrated before use.

13.10. Tests will be conducted using a microphone suspended over the **Track** above the normal driving line and connected by cable to the **Noise** level meter.

13.11. The microphone should be positioned on a straight section of the **Track** at a point where **Karts** are at maximum power.

13.12. The measurement position should be selected so that the effects of ambient and reflected noise is minimised. This position will be shown on the **Track Licence**.

13.13. Maximum noise levels will be 108 dBA with a microphone set at a height of 1.8m ±0.1m or 105 dBA with a microphone set at a height of 3.6m ±0.1m above the track.

14. Fuel

14.1. Fuel must be **Permitted Fuel** as defined in Ch.8 part (a) plus lubricant where applicable. **CIK-FIA** compliant Fuel as defined in Ch.8 part (b) may be used if specified in **Championship Regulations.**

14.2. The petrol / lubricant mixture as well as petrol only must comply with the **ASN** defined specifications in Ch.8**.**

14.3. The use of power boosting or octane boosting additives by competitors in any fuel is prohibited.

14.4. All systems of injection and/or spraying of products other than fuel are forbidden unless specifically permitted in **Class Regulations**.

14.5. Electrically powered **Karts** are permitted subject to **ASN** approval.

14.6. Alternative fuels may be permitted subject to **ASN** prior approval.

14.7. The fuel tank must be fixed in such a way that neither it nor the fuel pipes which must be flexible present any danger of leakage during the **Competition.**

14.8. The use of fuel catalyst devices fitted to fuel lines is prohibited.

14.9. If plastic is used for the tank it must be of a type suitable for carrying fuel.

14.10. The tank must supply the fuel pump with petrol under normal air pressure only.

14.11. Unless otherwise specified the petrol tank must be mounted within the area of the **Chassis Frame**.

14.12. Where appropriate the **Class Regulations** will specify tank capacity.

14.13. For all **Classes** to enable a fuel test to be conducted three litres of fuel should be present and a minimum of one litre of fuel must be present at the end of each **Race**. The penalty for failure to have the minimum quantity present is disqualification from the results in that **Race**.

14.14. Fuel samples will be tested in accordance with the procedure in **Ch.8 App.2**.

14.15. If control fuel is specified for use in an **Event** or **Championship** this must be specified in the **Official Documents**.

14.16. Any **Competitor** found to be using fuel or lubricants in contravention of **Regulations** may in addition to any other penalty be referred to the **ASN** for further action (Ch.8 App.2 Art.1.9).

14.17. **Competitors** must declare the percentage of lubricant used and further must provide when requested a minimum of 0.5 litre of that lubricant.

15. Bodywork and Bumpers

15.1. The following regulations apply unless specifically varied in **Class Regulations**.

16. Short Circuit Karts

16.1. All **Short Circuit Karts** must be fitted with bumpers and bodywork providing front rear and side protection.

16.2. All bodywork fitted to Short Circuit Karts (with the exception of Bambinos and pre-2023 900mm Cadet chassis) must be CIK-FIA Homologated. CIK-FIA Homologated bodywork that was homologated from 2015 or later must be used, with the exception of the Rear Wheel Protection (**Art.20**).

16.3. **CIK-FIA** Homologated bodywork consists of a Front Fairing Front Panel (Nassau Panel) Rear Wheel Protection and Side Pods as well as their homologated bumpers/bars and fixings. All parts must at all times conform to the relevant homologation fiche in every way.

16.4. The combination of homologated bodywork elements of different makes or models is authorised save and except that the two side bodywork elements must be used together as a set. Components from the same element cannot be mixed i.e. side bars from one homologation cannot be used with side pods from another homologation.

16.5. Alternative **CIK-FIA** Homologated bumpers only as detailed on the **ASN** published list may be used in lieu of those homologated with the side pod or front fairing.

16.6. No element of bodywork may be used as a fuel tank or for the attachment of ballast.

16.7. No alteration of bodywork elements is allowed.

16.8. On non-gearbox **Karts** (except Bambino) the **CIK-FIA** Homologated detachable front fairing mounting kit (**CIK-FIA** drawing 2.2 / 3.2) must be used unless otherwise specified in **Class** or **Championship Regulations**.

17. Front Bumper (App.9 Drawing 12)

17.1. The front bumper must:

a. Consist of two magnetic **Steel** elements lower and upper.

b. Be independent from the attachment of the pedals.

c. Be attached to the **Chassis Frame** by four points.

d. Have a minimum front overhang of 350mm.

17.2. The lower bar must:

a. Have a height of 90mm ± 20mm.

b. Have two attachment tubes of at least 50mm long parallel (in both horizontal and vertical planes) to the axis of the **Chassis Frame**. They must be 450mm ± 5mm apart and centered in relation to the longitudinal axis of the **Kart**. These attachments must be welded to the **Chassis Frame**.

c. Have a minimum diameter of 20mm (the two corners must have one constant radius of curvature).

d. Have a straight length of 305mm ± 10mm in relation to the longitudinal axis of the **Kart**.

17.3. The upper bar must:

a. Have a height of 225mm ± 25mm from the ground.

b. Have attachments 550mm ± 5mm apart and centered in relation to the longitudinal axis of the **Kart**. These attachments must be welded to the **Chassis Frame**.

c. Have a minimum diameter of 16mm (the two corners must have one constant radius of curvature).

d. Have a straight length of 385mm ± 5mm in relation to the longitudinal axis of the **Kart**.

18. Front Fairing (App.9 Drawing 4 & 5)

18.1. The front fairing must:

a. Under no circumstances be located above the plane through the top of the front wheels.

b. Not comprise any sharp edges.

c. Have a maximum gap between the front wheels and the back of the fairing of 180mm (with the wheels in the straight-ahead position). 150mm maximum for gearbox **Karts** unless varied in **Class Regulations**.

d. Have a front overhang of 680mm maximum. 650mm maximum for gearbox **Karts** unless varied in **Class Regulations**.

18.2. Where the **CIK-FIA** Homologated detachable front fairing mounting kit (17.1.6) is mandatory it must at all times be fitted and maintained in the correct position in accordance with **App.9 Drawing 16**. It is not permitted to reposition nor attempt to reposition a front fairing except by stopping in the repairs area (where such a facility is provided) and this may not be done after passing the chequered flag and before release from **Parc Fermé**.

19. Front (Nassau) Panel (App.9 Drawing 4)

19.1. The front panel must:

a. Not be located above the horizontal plane through the top of the steering wheel.

b. Allow a gap of at least 50mm between it and the steering wheel.

c. Not protrude beyond the front fairing.

d. Have its lower part solidly attached to the front part of the **Chassis Frame**.

e. Have its top part solidly attached to the steering column support with one or several independent bar(s).

20. Rear Wheel Protection

20.1. For all Short Circuit non-gearbox Karts (except Bambino) only a CIK-FIA Homologated rear wheel protection homologated for 2022 or later is permitted unless otherwise specified in Class or Championship Regulations.

20.2. For all gearbox **Classes** where a **CIK-FIA** Homologated rear wheel protection is not used a rear bumper to gearbox rear bumper regulations (**Art.25**) must be used.

20.3. **The rear wheel protection must**:

a. Under no circumstance be located above the plane defined by the top of the rear wheels.

b. Not comprise cuttings or openings other than those homologated.

c. Be fastened to the Chassis Frame by at least two points using supports homologated with the protection. These supports must be mounted (including by means of a flexible system) on the two main tubes of the Chassis Frame. This support, excluding the rear wheel protection itself and the bracket it is mounted to, can be secured with a cable or cable tie to the Chassis Frame.

d. Have any studs with more than three threads protruding from the rear of the **Kart** covered with appropriate nuts caps or suitable protective cover.

e. Have a gap between the front of the rear wheel protection and the surface of the rear wheels of 15mm minimum and 50mm maximum.

f. Have a ground clearance of 25mm minimum and 60mm maximum in at least three spaces of a 200mm (180mm for Cadet and Inter) minimum width, located in the extension of the rear wheels and the centreline of the chassis.

g. Have a rear overhang of 400mm (370mm for Cadet and Inter) maximum.

h. Have a width of minimum 1340mm (1040mm for Cadet and Inter) and maximum that of the overall rear width, at any time, in any condition and under any circumstance.

i. In all conditions, be in line with the outside of the rear wheels (not applicable to Cadet and Inter).

j. Have the two adjustable outer parts in a colour that is clearly different from the main part of the rear wheel protection (not applicable to Cadet and Inter). This can be done by a dedicated sticker kit or by different colour plastic.

21. Side Bumpers (App.9 Drawing 12)

21.1. **The side bumpers must**:

a. Be fixed to two welded tube attachments that must be 500mm ± 5mm apart. These two attachment tubes must be least 50mm long parallel (in both horizontal and vertical planes) to the axis of the **Chassis Frame**.

b. Have their upper bar at a minimum height of 160mm above the ground.

21.2. The side bumpers may be shortened and re-drilled in order to reduce the width of the **Kart**; no other modifications are permitted to the **CIK-FIA** Homologated side bumpers.

22. Side Pods (App.9 Drawing 4)

22.1. **The side pods must**:

a. Never be located either above the plane through the top of the front and rear tyres or beyond the plane through the external part of the front and rear wheels (with the front wheels in the straight-ahead position). In the case of a “Wet Race” App.7 Art.1.6.c side pods may not be located outside the plane passing through the outer edge of the rear wheels.

b. Not have the outermost point of the external face located inside the vertical plane through the two external edges of the wheels (with the front wheels in the straight-ahead position) by more than 40mm.

c. Have a ground clearance of 25mm minimum and 60mm maximum.

d. Have uniform and smooth surfaces that must not comprise holes or cuttings other than those necessary for their attachment.

e. Have a maximum gap between the front of the side pods and the front wheels of 150mm.

f. Have a maximum gap between the back of the side pods and the rear wheels of 60mm.

g. Not overlap the **Chassis Frame** as seen from underneath.

h. Be solidly attached to the side bumpers.

23. Gearbox Kart Bumpers

23.1. All gearbox **Karts** in the 125 Open Superkart 250 Mono and 210 National **Classes** unless specified in **Class Regulations** must be fitted with bumpers / bodywork providing front rear and side protection.

23.2. Rear bumper measurements will be taken as follows:

a. For the upper element the measurement will be taken to the top of tube.

b. For the lower element it will be measured to the top of the tube and then the diameter of that tube subtracted the result being the official measurement of height.

c. Where a gap is specified the gap will be measured between the bottom of the upper element and the top of the lower element.

d. All measurements to be taken with the **Kart** in dry configuration.

24. Gearbox Front Bumper

24.1. **The front bumper must**:

a. Consist of at least two **Steel** elements. An upper bar mounted in parallel above a lower bar. Both bars with a minimum diameter of 18mm and a minimum wall thickness of 1.5mm and being connected with two vertical tubes and welded to the upper rail as a minimum and presenting a vertical flat face.

b. Allow the attachment of the front fairing whenever a mandatory requirement.

c. Be attached to the **Chassis Frame** by four points.

d. Have a front overhang of maximum 350mm.

e. Have the lower bar straight and with a width of 150mm minimum in relation to the longitudinal axis of the **Kart**.

f. Have the attachments of the lower bar parallel (in both horizontal and vertical planes) to the axis of the **Chassis Frame**; they must be 155mm minimum apart but are recommended to be a minimum of 220mm apart as mandated by **CIK-FIA** Superkart regulations and centred in relation to the longitudinal axis of the **Kart** at a height of 60mm ± 20mm from the ground.

g. Have the upper bar straight and with a width of 250mm minimum in relation to the longitudinal axis of the **Kart**.

h. Have the upper bar 170mm minimum and 220mm maximum above the ground.

i. Have the upper bar attachments 500mm ±50mm apart and centred in relation to the longitudinal axis of the **Kart**.

j. Have the attachments of the upper bar and the lower bar welded to the **Chassis Frame**.

k. At no time have its upper element exceeding the height of the foot pedals with the pedals in the relaxed position.

25. Rear Bumper

25.1. **The rear bumper must**:

a. Be constructed of magnetic **Steel** tubing with a minimum outside diameter of 18mm and a minimum wall thickness of 1.5mm.

b. Consist of a minimum of two horizontal and parallel tubes with outer extensions forming a closed loop with a minimum radius of 2.5 times the tube outside diameter with two vertical link tubes to the **Chassis Frame** anchorage points (as per **App.9 Drawing 3 Diagram 2**).

c. Have a maximum vertical gap between any two horizontal elements not exceeding 95mm except that maximum dimension may be exceeded provided that there is at least one element – minimum outside diameter of 18mm and minimum wall thickness of 1.5mm – fitted approximately centrally and vertically as seen from the rear either permanently fixed or clamped between these horizontal elements.

d. Have its upper tube and uppermost extension element between 220mm and 280mm above the ground and be a minimum of 1100mm in length and a maximum of the overall **Kart** width.

e. Have its upper tube and extension loops made of a single piece of tubing.

f. Have its lower tube fixed horizontally between the main uprights or the end of the **Chassis Frame** main tubes between 40mm and 90mm above the ground in dry configuration be straight and a minimum of 600mm in length. If the **Kart** is fitted with a rear diffuser with a minimum of four vertical strakes not more than 20mm from the bumper the minimum height of the lower element must be between 75mm and 165mm. Alternatively for **Race Venue Events** only the lower tube must be between 100mm and 140mm above the ground in dry configuration be straight and a minimum of 600mm in length.

g. Inside have a rearward rake of between 0 and 45 degrees to the vertical (**App.9 Drawing 3 Diagram 2**).

h. In the case where a vertical bumper is fitted have the extension loops strengthened by triangulated **Steel** braces to the **Chassis Frame** to reduce folding in onto the rear tyre.

i. Have an overall width not exceeding the rear width of the **Kart** at any time (measured outside the rear wheels or tyres whichever is the greater).

j. Cover at least 50% of each rear wheel / tyre at all times.

k. Have any attachment fasteners made of high tensile **Steel**.

l. Not be an alternative design/material or an adjustable width bumper except with specific written approval from the **ASN**.

m. Have any studs with more than three threads protruding from the rear of the **Kart** covered with appropriate nuts caps or suitable protective cover.

26. Side Bumpers

26.1. Side bumpers are mandatory in all configurations whenever **CIK-FIA** Homologated bodywork is not used.

26.2. **Side bumpers must**:

a. Be made from magnetic **Steel** tubing with a minimum outside diameter of 18mm and a minimum wall thickness of 1.5mm.

b. Consist of two bars each side of the **Kart** both bars being connected with two tubes and welded together and presenting a vertical flat face and they must be attached to the **Chassis Frame** by a minimum of two points. These two attachments must be parallel to the ground and must be a minimum of 450mm apart. Note for **CIK-FIA** Division 1 and 2 Superkarts the two attachments must be perpendicular to the axis of the **Chassis-Frame** and must be a minimum of 520mm apart.

c. Have a clearance between the bars and the tyres not exceeding 100mm (with front wheels in the straight-ahead position).

d. Not extend beyond the plane through the outside of the front and rear tyres with the front wheels in the straight-ahead position (dry configuration).

e. At all times cover a minimum of 66% of the rear tyres.

26.3. **The lower bar must:**

a. Not exceed the height of the top of the rear axle.

b. Have a minimum straight length of 500mm.

c. Be 60mm ± 20mm from the ground.

26.4. **The upper bar must**:

a. Be joined to the lower bar at each end and also include two additional uprights.

b. Have a minimum straight length of 400mm.

c. Be 200mm ± 20mm from the ground.

27. Gearbox Short Circuit Bodywork

27.1. Gearbox **Short Circuit** bodywork is defined as including mandatory bodywork to general **Short Circuit Kart** regulations unless varied in the **Class Regulations**.

27.2. Lateral bodywork and front fairings must never cut the plane through the top of the front and rear tyres.

27.3. Rear vertical wing ends are permitted if **Class Regulations** allow but any form of wing or winglets or fully enveloping body panels are not permitted.

28. Gearbox Race Venue Event Kart Trim

28.1. Gearbox **Race Venue Event Kart** trim is defined as any combination of wings (either full width or part width), side pods which are above the plane of the top of the front to rear tyres, or a full width front fairing to **Art.29.10**.

28.2. Wings are not mandatory.

28.3. If a front fairing is mandatory it will be specified in **Class Regulations**.

28.4. No part of the bodywork, including wings and end plates, shall be adjustable from the driving seat in racing condition when the **Kart** is in motion.

29. Race Venue Event Kart Bodywork

29.1. **Bodywork bubble-shield and wing must:**

a. Be soundly constructed of a non-metallic material.

b. If plastic be splinter-proof.

c. Be designed to provide maximum safety for the **Driver** and other **Drivers** both during normal racing and in any accident.

d. Not present any sharp edges.

29.2. **No part of the bodywork including wings and end plates shall:**

a. Be higher than 600mm from the ground except for structures solely designed as head-rests with no possible aerodynamic effect.

b. Extend beyond the rear bumper.

c. Be nearer to the ground than the floor tray.

d. Extend laterally beyond the plane of the front and rear tyres (with the front wheels in the straight-ahead position and with the wheels in their outermost position), except in the case of a wet **Race** (see **App.9 Drawing 9**).

e. Have a width of more than 1400mm.

f. Have a gap of less than 25mm between any part of the bodywork and the tyres.

29.3. Should a complete bodywork and bubble-shield be used, (**App.9 Drawing 6, 8 & 10**) the bubble-shield shall be connected to the bodywork by no more than four quick release clips and shall have no other fixing device.

29.4. Should the bubble-shield be a separate structure, its maximum width shall be 500mm and the maximum width of its fixing frame 250mm.

29.5. The bubble-shield must neither be located above the horizontal plane passing through the top of the steering wheel nor be less than 50mm from any part of the steering wheel.

29.6. At the bottom the bubble-shield shall end symmetrically 150mm minimum from the pedals in the normal resting position and shall expose (not cover) the **Driver's** feet and the ankles.

29.7. In all cases, when the bubble-shield is removed, no part of the bodywork shall cover any part of the **Driver** seated in the normal position seen from the above.

29.8. The front of the nose of the bodywork must not constitute a sharp angle but must have a minimum radius of 20mm.

29.9. Front fairings must be such that it is possible for the front bumper to comply with the requirements.

29.10. They must not be wider than the front wheels when in a straight-ahead position and the top of the fairing must be above the horizontal plane passing through the top of the front tyres.

29.11. The floor tray shall be of flat construction and must have a curved beading edge.

29.12. From 230mm ahead of the rear shaft the floor tray may have an angle orienting it upwards (extractor). If the latter has one or two side fins, they must not protrude beyond the plane formed by the flat part of the floor tray.

29.13. Neither the floor tray nor any other part of the bodywork shall in any way resemble a skirt.

29.14. The floor tray shall not extend beyond either front or rear bumpers.

29.15. The width of the floor tray shall conform to and not exceed the dimensions of the bodywork including wings and end plates.

29.16. It is not allowed to cut lightening holes in the floor tray.

30. Number Plates

30.1. Number plates must have rounded corners (with diameters 15 to 25mm) and 220mm sides.

30.2. Stick-on panels used on an existing surface in lieu of a number plate need not have rounded corners and must be at least 170mm high by 170mm width with a minimum 10mm space on all sides of the numbers.

30.3. Number plates or stick-on panels as described above must be displayed in accordance with **App.9 Drawing 14**.The numbers must be at least 150mm high and 20mm stroke width.

30.4. Numbers must be fitted to front rear and both sides and must be securely attached and numbers always legible.

30.5. For **Race Venue Events** number plates must be carried front rear and on the side facing the Timekeeper's box.

a. The plates must be square with sides of minimum 250mm.

b. The numbers must be minimum 200mm high with a minimum stroke of 30mm.

c. The plates must be fixed so as not to bend or otherwise change their attitude in the airflow.

30.6. No **Club** may alter the requirements concerning the numbering of **Karts**.

30.7. The plates must be in opaque flexible plastic fixed in such a way that they are not deflected by the airflow. and the front and side plates may be made of fibre glass (polyester).

30.8. The plates must be solid or be attached to a solid backing and contain no holes other than those required for fixing.

30.9. The numbers must be of the 'Classic' type as shown below and represented with an Arial type font: 1–2–3–4–5–6–7–8–9–0.

30.10. Novice number plates will be black with either white or yellow numbers.

30.11. The **ASN** reserves the right to approve non-standard race numbers such as "Grand Prix Winner", GP and 0 (zero) and also race numbers 1-10 (one to ten). No other non-standard numbers or numbers 1-10 are permitted.

30.12. Those awarded their respective "number" (one to ten) or non-standard plate may use it for the following year should they continue to race in the same **Class** and in the same type of event (**Short Circuit** Gearbox one to ten may not use their numbers for **Race Venue Events** or vice-versa).

30.13. As soon as **Championship** results are declared final the previous seasons plates may no longer be used and the new **Championship** winners will be the only **Drivers** allowed to use such numbers.

31. Weight

31.1. **Class Regulations** will define minimum **Class** weights which are defined as the minimum weight for the kart plus driver and equipment (race condition) at any time.

31.2. Subject to **Art.6–13 at the beginning of this Chapter** clubs may run **Classes** to heavier weight limits (if **ASN** approval is given by the issue of a **Kart Technical Exception (KTE)**) but may not reduce the weight limits.

31.3. If it is necessary to use ballast in order to achieve a minimum weight this may be achieved by the addition of one or more solid blocks attached to the **Chassis Frame**, to a chassis auxiliary part (as defined in current **FIA** Karting Technical Regulations) except bumpers, or to the seat.

31.4. Maximum mass of a single ballast: 5.0kg. Combined ballast on the same attachment counts as a single ballast.

31.5. **Ballast** must be attached by means of tools with a minimum of two bolts each of minimum M8 size.

31.6. If the ballast is attached to a chassis auxiliary part, all bolts linking the auxiliary part to the **Chassis Frame** must be of the same minimum diameter as that used to attach the ballast itself.

31.7. Reinforcement plates are mandatory for the attachment of the ballast to the seat. These plates must have a minimum thickness of 1mm and a minimum diameter of 20mm.

31.8. No solid object (excluding jewellery / dog tags) may be carried on the **Driver's** person.

31.9. After a **Kart** and **Driver** have competed in any session it is not permissible to alter the weight of the **Kart** or **Driver** in any way before being weighed.

31.10. For **Classes** that include a minimum **Driver** weight only mandatory items of **Personal Protective Equipment (PPE)** as required by App.7 are to be included when the **Driver** is weighed.

32. Rear Lights on Race Venue Event Gearbox Karts

32.1. A rear-facing high intensity lamp must be fitted.

32.2. It will be permanently illuminated when wet tyres are fitted to the **Kart** or a **Race** is designated as a Wet **Race** or when instructed to do so by the **Clerk of the Course.**

32.3. Only lamps having a high intensity polarised light source and homologated with the **ASN / FIA** will be permitted.

32.4. The lens must have a minimum surface area of 280mm2 and the illumination must be visible from a point 45° either side of the centre-line.

32.5. The lamp unit must be mounted securely and centrally on the **Kart** forward of the rear bumper and the whole illuminated area of the light is to be positioned in the area shown in App.9 Drawing 15 in wet or dry configuration.

32.6. The light must be able to be switched on by the **Driver** when seated in the normal driving position by means of a switch.

32.7. **Karts** with lights not switched on when a race is declared wet will not be let out onto the circuit from the **Assembly Area** or **Pit Lane.**

33. Engines and Transmissions

33.1. The **Scrutineer** must be satisfied that the engine transmission exhaust system and all associated parts are installed in an appropriate manner and will perform safely and present no undue hazard to the **Driver** or other **Competitors.**

33.2. Where hand-throttle systems are fitted to assist push starts these should be maintained in a clean and fail-safe condition.

34. Engine

34.1. The engine / motor must be the sole propelling unit of a **Kart** in running order.

34.2. Unless the **Official Documents** state otherwise only engines readily available through normal commercial channels may be used.

34.3. Forced induction in any form is not permitted.

34.4. Power valves are allowed subject to **Class Regulations**.

34.5. All electronic/microchip methods of operation are forbidden.

34.6. Unless **Class Regulations** permit any form of manually operated or variable ignition (advancing or retarding systems) is forbidden.

34.7. Unless **Class Regulations** permit the use of programmable electronic engine management systems which can be varied whilst the **Kart** is in motion is also forbidden.

34.8. Engines must be fitted with effective radio interference suppressors.

34.9. Only sealed leak proof batteries are permitted.

34.10. Proprietary lead acid batteries sealed for life properly mounted and protected are acceptable.

34.11. Engine starter batteries and separate auxiliary data logger batteries where permitted must be fitted to a main **Chassis Frame** tube or within the confines of the main **Chassis Frame** and shall be placed on the **Chassis Frame** in an area located to the side of the seat opposite the engine and behind the central strut or alternatively mounted on or behind the seat. The battery carrier must be welded directly to the **Chassis Frame** or attached by means of tools to a minimum of two points on the Chassis Frame and in this case the following apply:

- Where attached to a chassis lug the bolt or bolts must be a minimum of M8 size.
- When utilising a clamp, all bolts must be a minimum of M6 size.

34.12. If Lithium batteries are used they must carry the appropriate “EC” and markings.

34.13. All karts fitted with a self-starting system must also be fitted with an operational on/off ignition switch clearly marked with the relevant positions.

34.14. The **Driver** of a self-start kart must be in the seat when the engine is started if the **Kart** is placed on the ground or when it is running on the dummy grid. It is recommended that the brake is applied during the starting procedure.

34.15. Terminals and electrical connectors must be covered with insulating material.

34.16. No part of the cooling system is permitted to be located directly in front of the **Driver’s** seat and may not pass over any part of the **Driver’s** body.

34.17. All pressurised pipes must be reinforced and a catch tank is recommended on cooling systems with vented caps.

34.18. A retaining device is recommended on pressure caps.

34.19. The use of inhibiting agents including anti-freeze is permitted.

35. Transmission

35.1. The transmission is the method of transferring drive from the crankshaft drive sprocket to the back axle sprocket.

35.2. For some **Classes** this drive may have a variable ratio gearbox interposed between engine and back axle sprocket.

35.3. Direct drive **Classes** must not be fitted with a variable ratio transmission. However they may be fitted with a clutch if permitted in **Class Regulations**.

35.4. Clutches are recommended for all Bambino Cadet Inter and Junior **Categories** and are mandatory for all new Cadet and Junior **ASN** homologated engines.

35.5. **Karts** competing in the **Gearbox Classes** must be equipped with a variable ratio transmission providing a minimum of two speeds and must be fitted with a clutch.

35.6. All **Classes** must use axles of magnetic **Steel** material with a maximum external diameter of 50mm.

35.7. The axle wall thickness at all points (except in keyway housings) must comply as minimum to the dimensions shown in the table below. Exceptionally axles for use in 210 and Superkart 250 Mono **Classes** with a diameter greater than 40mm must have a minimum wall thickness of 2.9mm. Please also refer to **Class Regulations** for any variations.

Maximum external diameter(mm)	Minimum thickness (mm)
50	1.9
49	2.0
48	2.0
47	2.1
46	2.2
45	2.3
44	2.4
43	2.5
42	2.6
41	2.8
40	2.9
39	3.1
38	3.2
37	3.4
36	3.6
35	3.8
34	4.0
33	4.2
32	4.4
31	4.7
30	4.9
29	5.2
≤28	Solid Axle

35.8. The drive must always be to the rear wheels only.

35.9. Any method may be used provided no differential is incorporated.

35.10. All methods of chain oiling and greasing whilst the **Kart** is in motion are forbidden unless specifically permitted in the **Official Documents**.

35.11. Sprocket protectors are permitted in all **Classes** but must not be metallic.

35.12. Effective protection must be provided over the top and both sides of the exposed transmission chain (or belt) and sprockets and extend to at least the lower plane of the rear axle.

35.13. Access for the starter is permitted.

35.14. Clutches on non-gearbox **Karts** must be covered preferably by metal guards.

35.15. Non-gearbox **Karts** must use a 219 pitch chain only.

35.16. For **Race Venue Events** all rear axles must be fitted with a circlip – or a similarly effective hub retaining device – on each end of the axle.

36. Cameras

36.1. Where used cameras must be attached securely to the **Kart** and be approved by the **Chief Scrutineer** and **Event Organiser.** The weight of the camera including any additional casing (excluding any additional mounting and associated fixing) must not exceed 200g

36.2. The images captured by the camera must not be deleted before 30 minutes following the conclusion of the last race at the **Event** and must be surrendered to an **Official** of the **Event** on demand.

CHAPTER 18 KART RACING

Appendix 9 - Kart Race Technical Drawings with Dimensions

Drawing 1

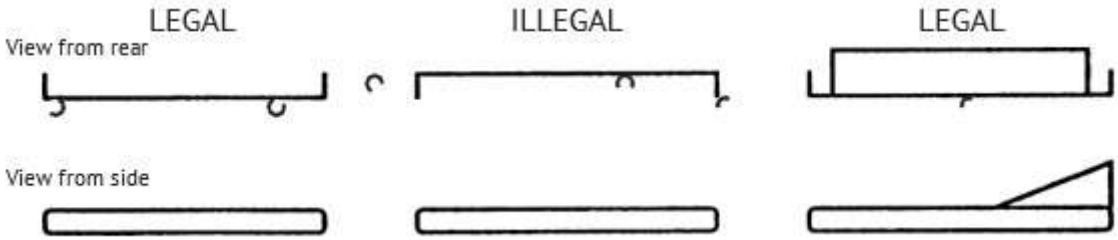

Drawing 2

Only suits bearing one of the below labels are acceptable as CIK homologated

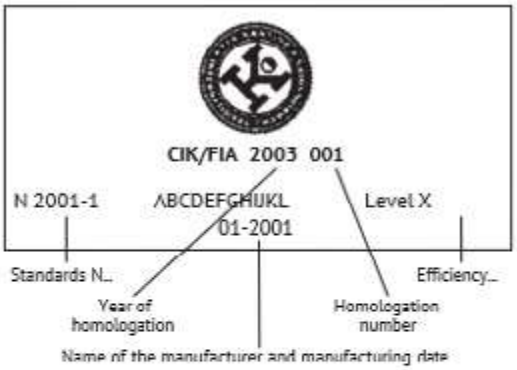

Drawing 3

Diagram 1

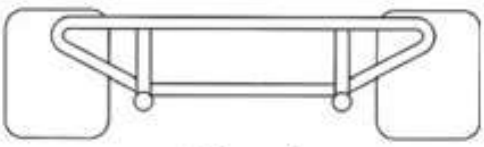

Diagram 2

Diagram 3

Drawing 4

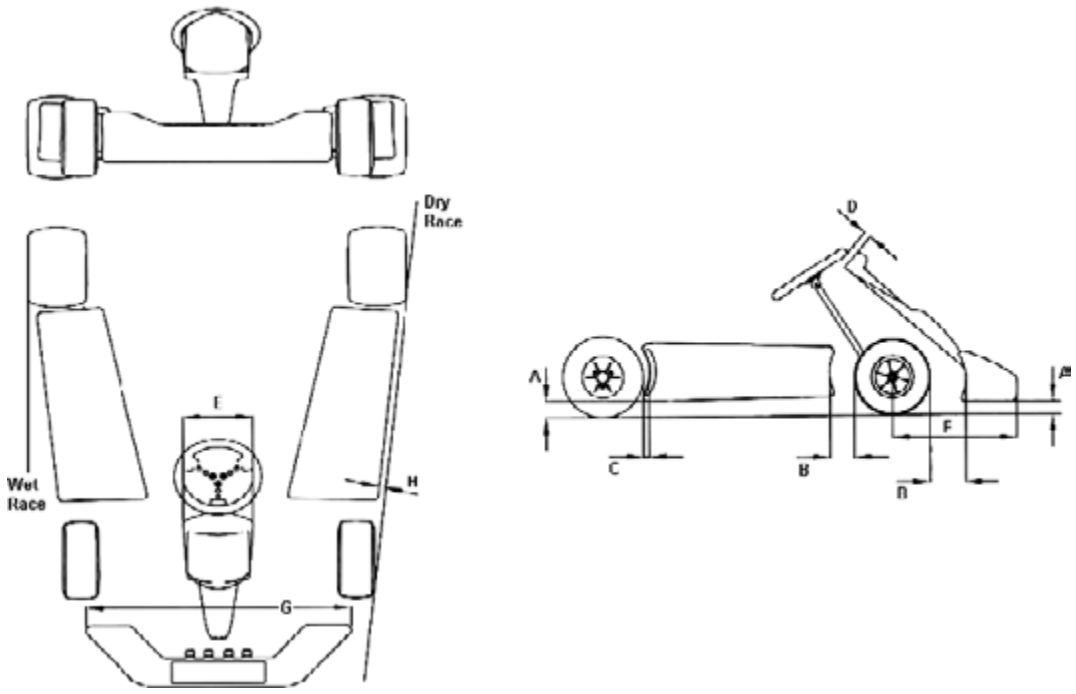

Drawing 5

Code Letter	Short Circuit	Cadet 900	Cadet/Inter (950)	Limit
A (Driver onboard)	25mm	25mm	25mm	Minimum
	60mm	60mm	60mm	Maximum
B	180mm (150mm gearbox)	150mm	130mm(f)/ 160mm(r)	Maximum
C	60mm	60mm	60mm	Maximum
D	50mm	50mm	50mm	Minimum
E	250mm	250mm	200mm	Minimum
	300mm	300mm	300mm	Maximum
F	680mm (650mm gearbox)	530mm	630mm	Maximum
G	1000mm	700mm	As homologated	Minimum
	External width of front track	1000mm	As homologated	Maximum
H	40mm	40mm	30mm	Maximum

Drawing 6

Lower end of bubbleshield showing minimum 15cm gap between shield and pedals. Also indicating the maximum 4 fixing points if shield attached to bodywork.

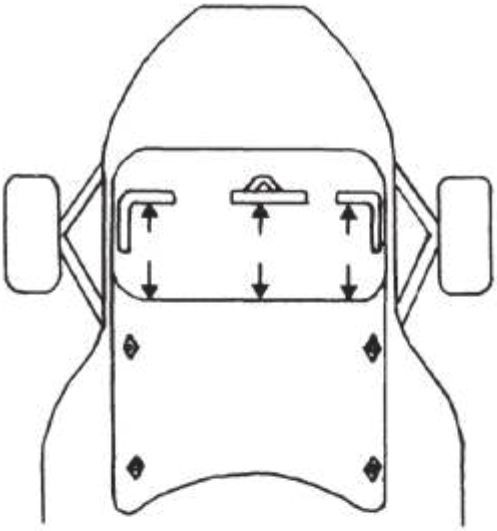

Drawing 7

The plan showing the limits beyond which neither bodywork, wings or end plates may protrude. (Kart in dry tyre condition.)

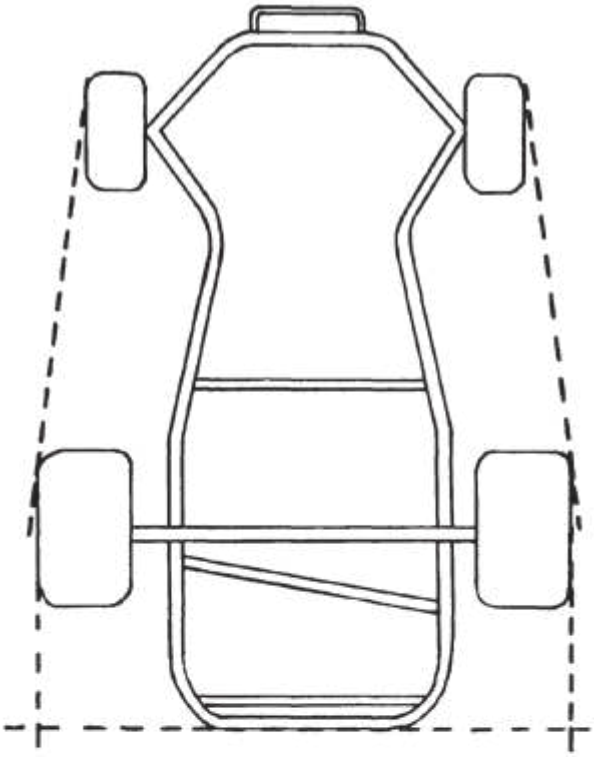

Drawing 8

Bubbleshield showing overall width dimensions and the maximum width of supports

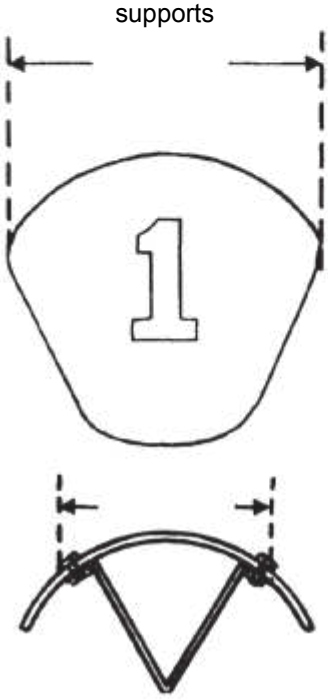

Drawing 9

Floor tray. Showing legal and illegal. Illegal is defined as creating a skirt effect.

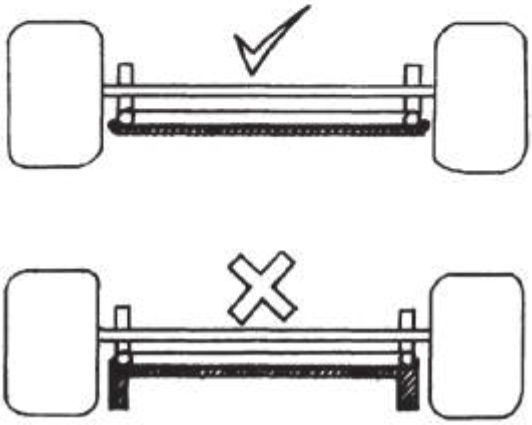

Drawing 10

Bubbleshield profile showing horizontal line it must not cross and the minimum 5cm gap between the shield and steering wheel.

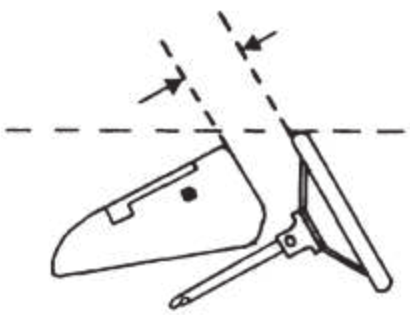

Drawing 11

Steering wheel projection

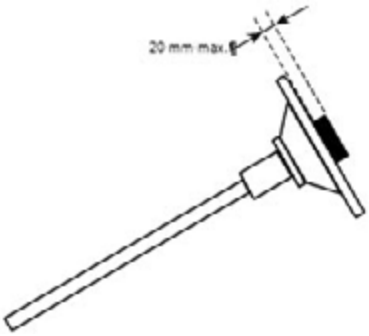

Drawing 12

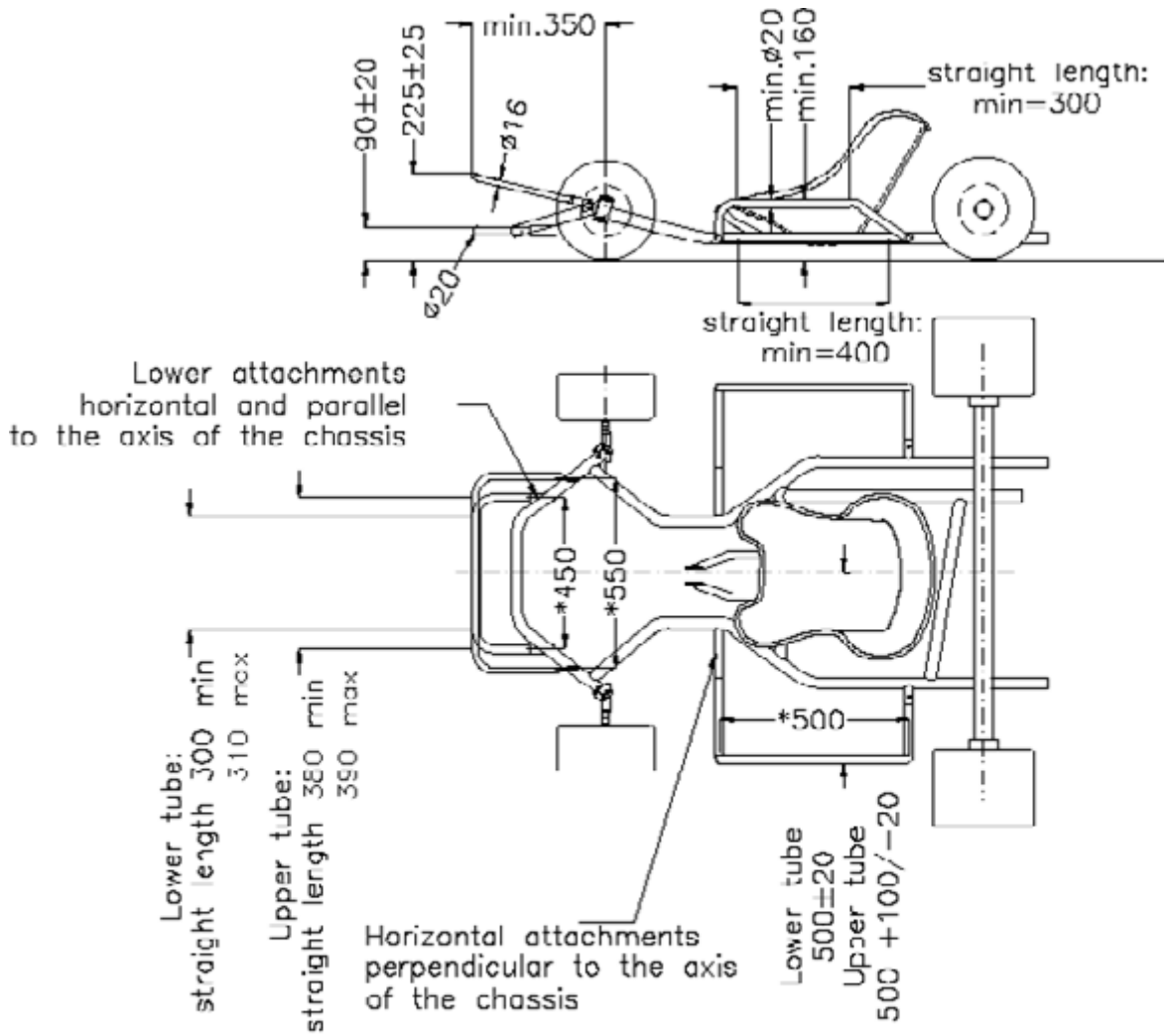

Lower Tube Ø 20mm with one constant radius.

Upper tube Ø 16mm with one constant radius.

** +/- 5 mm, tube axes dimensions*

Dimensions in mm

Drawing 13

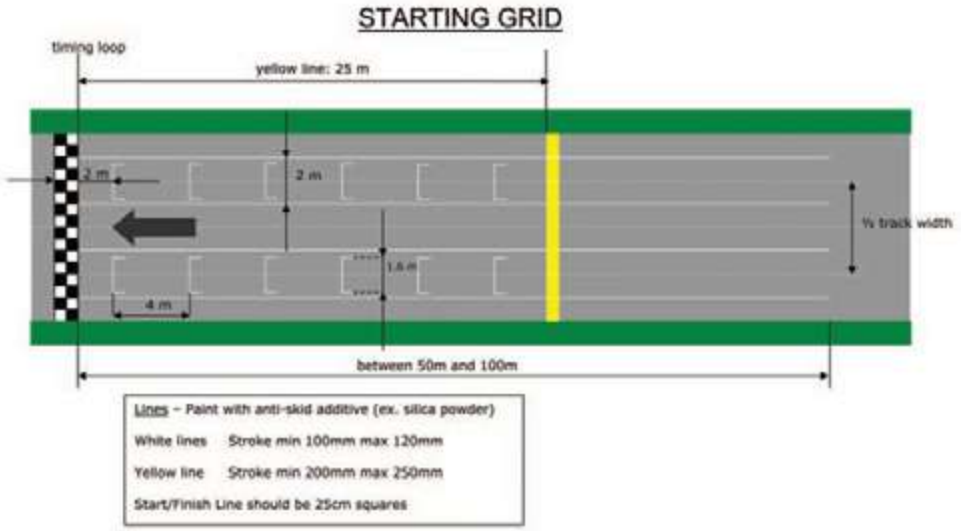

Drawing 14

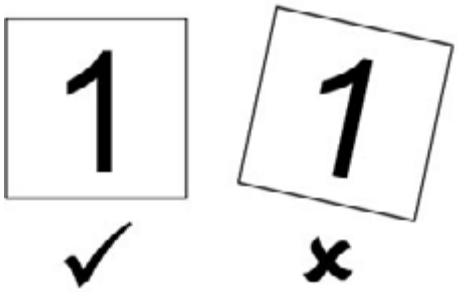

Drawing 15

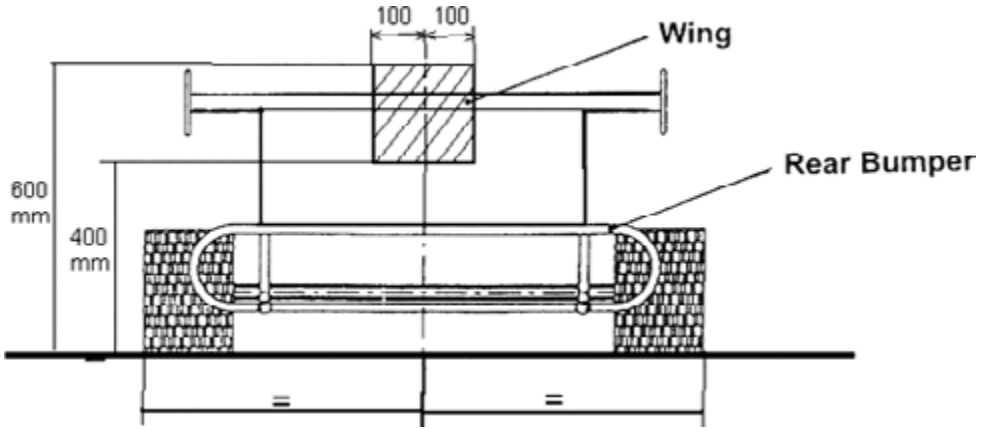

Drawing 16

Correct Position

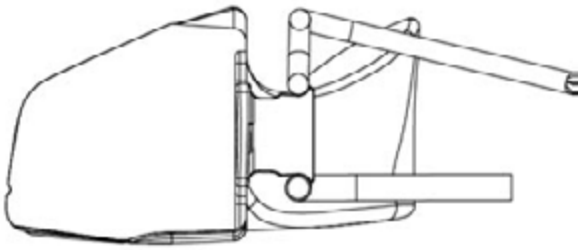

Unacceptable position – if any part of the front bumper tubes is in an area marked ‘A’

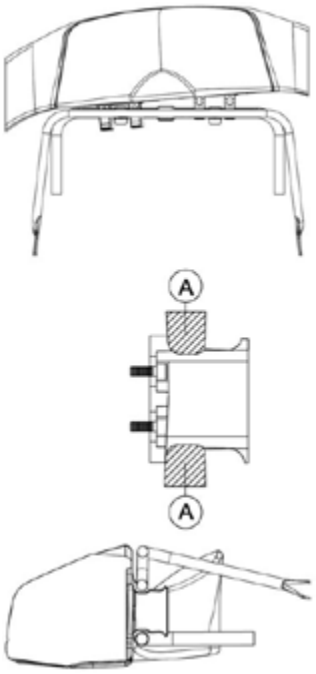

Chapter 19

Autotest

CHAPTER 19 AUTOTEST

This Chapter must be read in conjunction with Chapters 1-11 as appropriate.
This Chapter is separated into the following appendices:

- App. 1 Organisers Regulations
- App. 2 Clerk of the Course Duties and Responsibilities
- App. 3 Technical Regulations applying to all Events
- App. 4 Autotests Specific Regulations
- App. 5 Production Car Autotests Specific Regulations
- App. 6 AutoSOLO Specific Regulations
- App. 7 Competitor Regulations including Licensing
- App. 8 Summary of Requirements
- App. 9 Drawings

1.1. The **Clerk of the Course** specific duties at App. 2 are in addition to the relevant provisions and the applicable responsibilities within **NCR** Chapters 1 – 3 and 5.

1.2. **Competitors** must comply with App. 3 and App.7 of this Chapter and the sub-discipline specific Appendix (4, 5 or 6) as well as all applicable elements of **NCR** Ch.1, 2 and 6.

1.3. The **Technical Regulations** at App. 3 apply as current at the date of the **Event.**

1.4. A summary of key requirements appears at App. 8.

CHAPTER 19 AUTOTEST

Appendix 1 - Organisers Regulations

1. General

1.1. **Permits** for the organisation of **Autotests**, **Production Car Autotests, AutoSOLOs and Evening Autotest/AutoSOLO** are issued at the sole discretion of the **ASN.**

1.2. A **Club** can only organise an **Autotest** or **AutoSOLO Event** up to and including **Clubman** status unless and until all necessary upgrading criteria for a higher status have been complied with. **Permits** for **Production Car Autotests** will only be issued at **Clubman** status.

1.3. For an **Autotest** or **AutoSOLO** to be considered for upgrading to **Interclub** status it must first be observed in the same format as a **Clubman Event** and have a minimum entry of 15 starters.

1.4. The **Supplementary Regulations** must in addition to any all other relevant requirement of the **NCR** specify:

a. Details of the tests (see examples at **Drawings 1 and 2**) or when these details will be notified to **Competitors.**

b. The number of runs per **Driver** and how these count towards the results.

c. The method of identifying **Vehicles.**

d. The method of timing and whether or not the timing apparatus is started by the **Vehicle** or by the starting **Signal.**

e. The starting **Signal.**

f. Whether carrying a **Passenger** will be allowed or not or will be compulsory.

g. The marking of the **Tests**.

h. The method of calculation of results with reference to **App.9 Penalty Tables.**

i. Any specific provisions regarding discounting of worst scores in the calculation of results.

j. The method of resolving any tied scores.

k. If any car may be entered to compete for the same award more than twice but in any event in all cases must be driven by different **Drivers.**

1.5. Before the start of the **Competition Event** all **Vehicles** and **Competitors** including any permitted **Passengers** must be checked for eligibility to compete.

2. Test Layouts

2.1. The route must be made available to all **Drivers** before any test.

2.2. There must be no optional direction of travel except as specified in **Art.3.10** below.

2.3. Clarification of where and how a change of direction or spin turn may be made without incurring a penalty must be available on request to all **Competitors** before the start of any test.

2.4. Practising for tests is not permitted.

2.5. The start and finish of all tests must be in a forward direction.

2.6. All **Drivers** should have the opportunity to walk the course before competing. If not the tests must be arranged such that the whole of the course is visible to the **Driver** from the start line

2.7. Markers should be not less than 1m in height unless otherwise specified in the **Official Documents**.

2.8. **'All forwards' tests (except AutoSOLOs):**

a. Where there are no stop astride penalty lines (other than the **Start** and **Stop** lines) **Competitors** must not be allowed or required to travel more than 50m without changing direction by:

i. Executing a turn of over 180° around a single marker; or

ii. Changing direction through a three-marker line either in slalom fashion or by completing a turn of between 90° and 180°; or

iii. Changing direction through a three-marker triangle whose base is at right angles to the original line of travel requiring Competitors to turn through 90° from the line of entry.

b. Whichever of the above methods is used to change direction this will not preclude the inclusion of less severe slalom manoeuvre which produce turns of less than 90° being incorporated between the mandatory directional changes every 50m.

c. All lines or pairs of adjacent markers forming part of any all-forward test must be a minimum of 3.5m and a maximum of 5m long or apart.

d. See App.9 Drawing 1 Example of a test showing all of the above elements in use.

3. Test Procedures

3.1. **Drivers** will be considered under **Starter's** orders when instructed by an **Official** to proceed to the **Start** line.

3.2. **Drivers** then failing to proceed may forfeit their run or may be penalised in accordance with App.9 Penalty Tables

3.3. A start will only be valid if made under the **Vehicle's** own power.

3.4. Timing will start when the leading wheel of the front axle crosses the **Start** line.

3.5. When a **Vehicle** is required to stop astride a line the line must be between its front and back axles and all the area of the tyres in contact with the ground must be seen to have crossed the full width of the line.

3.6. Similarly if a car is required to cross a line with all four wheels all tyre contact area must be seen to be clear of the line.

3.7. Timing at completion of a test must be based on the leading wheel (on the front axle) crossing the **Finish** line.

3.8. Penalties will be applied for failure to cross the line with both front wheels or alternatively if timed to a flying finish for crossing the baulk line.

3.9. In the event of **Competitors** performing a test incorrectly their times must still be recorded together with the appropriate penalties.

3.10. In any diagram illustrating a test the dimensions should be approximate and for guidance only. Indications of the direction of travel of the competing **Vehicles** when crossing a line or passing between markers must be shown unless specified otherwise (ignoring 'shunts' to avoid markers).

3.11. A maximum penalty (see App.9 Penalty Tables.) shall be applied if a **Competitor** fails to follow the prescribed test route by passing the wrong side of one or more markers crosses with both leading wheels a marked test line in the wrong direction out of the prescribed sequence or too many/few times without correcting the mistakes by returning to the point where they deviated from the test diagram before crossing the test finish line unless otherwise specified in the **Official Documents**.

3.12. In changes of direction and spin turns either lock can be used (unless the test diagram specifically states otherwise). It is recommended for safety reasons that **Drivers** are on the 'inside' during spin turns.

3.13. **Clerks of the Course** wishing to define direction of travel between markers should include any necessary marked line(s).

3.14. In the event of a re-run caused by a timing failure the greater number of penalties incurred in either run will be added to the time taken in assessing the performance on that test.

3.15. Each test layout must be attempted at least twice or more if specified in the **Official Documents** with the exception of **Events** organised for cars of Periods A – D.

4. Marking

4.1. **Judges** must be appointed to each test to adjudicate on:

a. False starts;

b. Crossing/failing to cross marker lines;

c. Touching markers and not following the correct route.

4.2. **Competitors** will be provided with a score card for the **Organisers** to record times and penalties at the completion of each test run.

4.3. Marks will be lost for time taken (if applicable) and for any infringements of the test instructions such as striking a marker or crossing a boundary line.

4.4. Each **Competitor's** worst score on any test layout may be discarded in arriving at the total penalties for the Event if specified in the **Official Documents.**

5. Results

5.1. **Competitors** will start with zero marks.

5.2. Performance will be assessed as in **App.9 Penalty Tables.** unless otherwise specified in the **Official Documents**.

5.3. All **Class** awards must be calculated on the basis of penalty marks lost with the **Competitor** incurring the least penalty points being judged the winner.

5.4. To be classified as a finisher **Competitors** must complete not less than half of the tests and must hand in their score card to **Officials** within 15 minutes of all other **Competitors** completing the final test.

5.5. In the event of a tie the **Competitor** who was first to have the lesser penalty from the start will be adjudged the winner unless otherwise specified in the **Official Documents**.

CHAPTER 19 AUTOTEST

Appendix 2 - Clerk of the Course Duties and Responsibilities

1.1. The duties and responsibilities of the **Clerk of the Course** at **Autotest, Production Car Autotest and AutoSOLO Events** includes ensuring the following:

a. The maximum size for any timed **Test** site is 200m by 200m. The 200m applies to the overall length and width of the area on which the **Test** is conducted and not the actual distance covered by a **Vehicle** performing the **Test**;

b. At all timed **Tests**, all spectators and non-essential **Marshals** not protected by a solid barrier capable of stopping a car must be separated by rope or fencing at least 10m from the edge of the course and at least 20m from the **Finish Line**. Any space at the edge of the **Course** allowed for braking and changes of direction must not impinge on the above distances.

1.2. Every **Test** must have at least one person responsible for:

a. The general running of the **Test**;

b. Observing and recording penalties;

c. Recording the times taken;

d. Completing the score card with the addition of penalties;

e. Returning displaced markers to their original position.

1.3. **Judges of Fact** must be appointed to each **Test** site to adjudicate on excessive sound.

1.4. **Warning Notices** as required by Ch.3 App.3 must be displayed.

1.5. Fire extinguishers (minimum 5kg total capacity in units of not less than 2kg) must be available at each **Test** site.

1.6. The **Organisers** must provide a **First Aid Kit.**

1.7. A **Medium Sized Spill Kit** must be available at each test site.

CHAPTER 19 AUTOTEST

Appendix 3 - Technical Regulations applying to all Events

1. General

1.1. **Classes** are free but the **Class** structure must be stated in the **Official Documents.**

1.2. Any entered **Vehicle** must be a Car for vehicle tax purposes and currently registered and taxed unless otherwise specified in the **Official Documents**.

1.3. Whilst on the **Public Highway Vehicles** must comply with all Statutory Regulations as to Construction and Use.

1.4. Hybrid, Electric and Battery-powered and Light Goods Vehicles may compete in appropriate **Classes** subject to the **Official Documents**.

1.5. Production cars whose original wheelbase is less than that specified in **Ch.7 App.2 Art.22.6** are permitted.

1.6. Every **Production Car Autotest Vehicle** must have been in series production and on general catalogued sale and available from stock through normal retail dealer outlets in the UK. It is the **Competitor's** responsibility to demonstrate this conformity.

1.7. A summary of Key Requirements is at **App. 8.**

1.8. **Competing Vehicles** must comply with the following:

a. Body (including Aerodynamics):

i. Body shape must conform to the original silhouette of the production **Vehicle** and retain the original layout of engine and transmission;

ii. Bumpers can be removed and wheel arch extensions added;

iii. An effective windscreen or Aero-type screen must be fitted;

iv. Any areas of window opening or transparent material originally specified as part of the vehicle to provide **Driver** visibility must remain consistent with the original specified dimensions and position. No additional areas may be added. If a **Vehicle** is equipped with any such additional areas they must be rendered opaque before the vehicle is allowed to compete;

v. **Vehicles** not complying with the above will be classified as **Specials.**

b. Engine must comply with **Ch.7 App.2 Art.8**.

c. Silencing must comply with silencing levels in **Ch.7 App.8 Art.2.**

d. Safety: all open **Vehicles** and **Specials** are recommended to fit safety roll-over bars to at least **Ch.7 App.3 Art.22**.

e. The following parts of **Ch.7** remain unmodified by this section: Chassis; Seating; Suspension; Brakes; Steering; Tyres; Cooling; Oil Systems; Fuel Systems; Electrical Systems; Weight/Ballast; Exhausts; Silencing.

f. All **Vehicles** should carry a **Small Spill Kit** complying with **Ch.7 App.2 Art.22.15**.

g. Tyres from **Ch.8 App.4 Lists 1B** or **1C** are not permitted.

CHAPTER 19 AUTOTEST

Appendix 4 - Autotests Specific Regulations

1. Passengers

1.1. **Passengers** are not allowed on **Autotests** on any **Timed Tests.**

2. Unlicensed Drivers and Minimum Ages

2.1. Entries may be accepted from **Drivers** who are aged 15 years and over and are at least 135cm in height (subject to any medical or disability exemption) who do not have a valid, full RTA **Licence** subject to the following:

a. Except where provided for in Art.2.1.b, the **Vehicle** must by definition be a '**Touring Car**';

b. With the **ASN**'s written permission and where the **Official Documents** permit, the use of by definition production '**Sports Cars**' are permitted provided they are fitted with safety roll-over bars to at least the specification in Ch.7 App.3 Art.22, and the roof erected or hard top fitted.

c. Engine capacity must not exceed 1400cc

d. Forced induction is not permitted.

2.2. It is recommended that a separate non-competitive test is provided in the itinerary so that novice **Drivers** without a valid, full RTA **Licence** can familiarise themselves with their **Vehicle** and its controls without penalty and to be observed to the satisfaction of the **Clerk of the Course** or another **Senior Official** before the **Competition** starts.

2.2.1. In the event that a separate non-competitive test is not provided, novice **Drivers** must demonstrate that the provisions of Art.2.2 are satisfied (including observation by the **Clerk of the Course** or another **Senior Official**) before proceeding into and utilising the competitive test.

3. Test Layouts

3.1. **Vehicles** must not be allowed to travel more than 100m (between manoeuvres) without having to stop astride a penalty line and reverse or drive clear of the line or manoeuvre in a garage or box.

3.2. **Competitors** must either stop astride a penalty line or make a change of direction of at least 90° at a distance of not more than 25m before the finish line.

3.3. Any 'garage' used in an **Autotest** must have a minimum length of 6m and a minimum width of 3.5m.

3.4. When **Competitors** are required to perform a 180° turn in a box, the size of the box should be sufficient to contain a circle of 16m diameter.

3.5. All lines or pairs of adjacent markers forming part of any test must be a minimum of 3.5m long or apart.

CHAPTER 19 AUTOTEST

Appendix 5 - Production Car Autotests Specific Regulations

1. General

1.1. The **Official Documents** for an **Event** will state whether cabriolet / **Sports Cars** will compete with the hood erected or a hardtop fitted, or not.

1.2. Every **Production Car Autotest ('PCA') Vehicle** must have been in series production and on general catalogued sale and available from stock through normal retail dealer outlets in the UK.

2. Passengers

2.1. A **Passenger** must be carried in all **Timed Tests.**

2.2. The **Passenger** must occupy the seat alongside the **Driver** and, except where competing in a **Period Defined Vehicle (Non-Rally)** (both historic and non-historic **Vehicles**) Categories A-F, wear a properly fastened and approved seat belt at all times during the test.

2.3. No other **Passenger** is allowed.

2.4. The **Passenger** in a **Touring Car**, or a cabriolet/**Sports Car** with the hood erected or a hardtop fitted, must be aged 12 years or over and be at least 135cm in height (subject to any medical or disability exemption)

2.5. The **Passenger** in a cabriolet/**Sports Car** without the hood erected or hardtop fitted must be aged 16 years or over and be at least 135cm in height (subject to any medical or disability exemption)

3. Unlicensed Drivers and Minimum Ages

3.1. Entries may be accepted from **Drivers** who are aged 13 years and over and are at least 135cm in height (subject to any medical or disability exemption) who do not have a valid, full RTA **Licence**, subject to the following:

a. Except where provided for in **Art.3.1.b**, the **Vehicle** must by definition be a '**Touring Car**';

b. With Motorsport UK's written permission and where the **Official Documents** permit, the use of by definition production '**Sports Cars**' are permitted provided they are fitted with safety roll-over bars to at least the specification in **Ch.7 App.3 Art.22**, and the roof erected or hard top fitted.

c. The **Vehicle** engine capacity must not exceed 2000cc including forced induction;

d. The **Passenger** must be carried who holds a valid, full RTA **Licence** and be experienced in **Autotests** or **AutoSOLOs**.

3.2. It is recommended that a separate non-competitive test is provided in the itinerary so that novice **Drivers** without a valid, full RTA **Licence** can familiarise themselves with their **Vehicle** and its controls without penalty and to be observed to the satisfaction of the **Clerk of the Course** or another **Senior Official** before the **Competition** starts.

3.2.1. In the event that a separate non-competitive test is not provided, **Drivers** must demonstrate that the provisions of **Art.3.2** are satisfied (including observation by the **Clerk of the Course** or another **Senior Official**) before proceeding into and utilising the competitive test.

4. Test Layouts

4.1. All lines, and pairs of adjacent markers, forming part of any test must be a minimum of 3.5m long or apart.

4.2. Any 'garage' must have a minimum length of 6m and a minimum width of 3.5m.

4.3. When **Competitors** are required to perform a 180° turn in a box, the size of the box must be sufficient to contain a circle of 16m diameter.

4.4. Each test must be designed so that a **Competitor** is not expected to engage reverse gear more than four times (ignoring manoeuvres to correct mistakes).

4.5. '**All forwards' tests**: App.1 Art.2.8 applies.

CHAPTER 19 AUTOTESTS

Appendix 6 - AutoSOLO Specific Regulations

1. General

1.1. The **Official Documents** for an **Event** will state whether cabriolet/**Sports Cars** will compete with the hood erected or hardtop fitted or not.

2. Technical Regulations

2.1. Every **AutoSOLO** car must have been driven to the **Event** must be currently registered (no trade plates) taxed insured and where appropriate in possession of a valid MOT

3. Passengers

3.1. A **Passenger** may be carried on any **Timed Tests.**

3.2. The **Official Documents** for an **Event** will specify whether the **Driver** can elect to carry a **Passenger** or not. If carried the **Passenger** must occupy the seat alongside the **Driver.**

3.3. One Passenger may be carried in each competing car to assist in giving directions to the Driver. Once the Event has started the number of occupants of the car must not be varied.

3.4. The **Driver** and where carried the **Passenger** must wear a properly fastened and approved seat belt at all times during the test except where competing in a **Period Defined Vehicle** (Non-**Rally**) (both historic and non-historic) Categories A-F.

3.5. No other **Passenger** is allowed.

3.6. The **Passenger** in a **Touring Car** or a cabriolet/**Sports Car** with the hood erected or a hardtop fitted must be aged 12 years or over and be at least 135cm in height (subject to any medical or disability exemption).

3.7. The **Passenger** in a cabriolet/**Sports Car** without the hood erected or hardtop fitted must be aged 16 years or over and be at least 135cm in height (subject to any medical or disability exemption).

4. Unlicensed Drivers and Minimum Ages

4.1. Entries may be accepted from **Drivers** who are aged 13 years and over and are at least 135cm in height (subject to any medical or disability exemption) who do not have a valid full RTA **Licence** subject to the following:

a. Except where provided for in Art.4.1.b, the **Vehicle** must by definition be a '**Touring Car**';

b. With the **ASN**'s written permission and where the **Official Documents** permit, the use of by definition production '**Sports Cars**' are permitted provided they are fitted with safety roll-over bars to at least the specification in Ch.7 App.3 Art.22, and the roof erected or hard top fitted.

c. The **Vehicle** engine capacity must not exceed 2000cc including forced induction

d. The **Passenger** must be carried who holds a valid full RTA licence and be experienced in **Autotests** or **AutoSOLOs**.

4.2. It is recommended that a separate non-competitive test is provided in the itinerary so that novice **Drivers** without a valid, full RTA **Licence** can familiarise themselves with their **Vehicle** and its controls without penalty and to be observed to the satisfaction of the **Clerk of the Course** or another **Senior Official** before the **Competition** starts.

4.2.1. In the event that a separate non-competitive test is not provided, **Drivers** must demonstrate that the provisions of Art.4.2 are satisfied (including observation by the **Clerk of the Course** or another **Senior Official**) before proceeding into and utilising the competitive test.

5. Test Layouts

5.1. Only sealed surfaces can be used for **AutoSOLO** tests which must be run in an all-forwards direction.

5.2. The course must consist of a series of gates slaloms and turns of at least 90° every 60m.

5.3. The maximum spacing of cones in a slalom along the line of the test is 20m.

5.4. Turns of over 90° must be on a minimum radius of 5m.

5.5. All lines or pairs of adjacent markers forming part of any test must be a minimum of 3.5m and a maximum of 5m long or apart.

5.6. A typical test is illustrated in **App.9 Drawing 2.**

CHAPTER 19 AUTOTEST

Appendix 7 - Competitor Regulations including Licensing

1. Licences

1.1. **Drivers** and where applicable **Passengers** must produce a valid **Club** membership card and **Competition Licence** (see **Ch.6 Annexe A**).

1.2. **Competitors** must declare on their entry form if they hold a valid full RTA **Licence**.

1.3. **Competitors** holding a valid full RTA licence may use any **Vehicle** allowed by the **Official Documents** including **Technical Regulations.**

1.4. **Passengers** under 18 years old will not be considered as **Competitors** for the purpose of **Club** membership.

2. Instructions to Competitors

2.1. Before the start cars and **Competitors** (including any **Passengers**) must be checked for eligibility.

2.2. Any **Competitor** not reporting as instructed may be fined penalised disqualified or forfeit their starting position.

2.3. Except where competing in **Period Defined Vehicles (Non-Rally)** (both historic and non-historic) Categories A-F it is recommended that drivers wear as a minimum a lap belt on any timed test.

2.4. A **Vehicle** may not be **Entered** to compete for the same award more than twice unless otherwise specified in the **Official Documents** and in all circumstances it must be driven by different **Drivers.**

CHAPTER 19 AUTOTEST

Appendix 8 - Summary of Requirements

A Summary of Key Requirements

Maximum Test Area	**Autotest with Reversing** **200m x 200m**	**Autotest all Forwards** **200m x 200m**	**Production Car Autotests** **200m x 200m**	**"Common Rules" Test Area for Autotest** **200m x 200m**	**AutoSOLO** **200m x 200m**
Surface	Free	Free	Free	Free	Sealed
Cone height "should" be	1m	1m	1m	1m	1m
Gate width	3.5m min	3.5m min – 5m max	3.5m min	3.5m – 5m	3.5m min – 5m max
Maximum distance before manoeuvres	100m	50m	50m	50m max	60m
Reverse gear engagements	Free	Should be none!	4 max	"None"	Should be none!
Turns over 90˚	Free	Free	Free	Free	min 5m radius
180˚ turn in box	16m dia min	16m dia min	16m dia min	16m dia min	min 5m radius (10m Ø)
"Garage" size (minimum)	6m x 3.5m	N/A	6m x 3.5m	N/A	N/A
Slalom spacing					20m max
Technical					
MOT	No – if **Official Documents** state not needed	No – if **Official Documents** state not needed	No – if **Official Documents** state not needed		Yes
Tax	No – if SR state not needed	No – if SR state not needed	No – if SR state not needed		Yes
Minimum age driver	15	15	13		13
Maximum cc	1400*	1400*	Touring car – 2000cc* inc forced induction		Touring car – 2000cc* inc forced induction
Passenger allowed	No	No	Mandatory – Must have Full RTA **Licence** and **Autotest** experience if driver does not		Subject to **Official Documents**
Minimum age passenger	None allowed	None allowed	Closed Car = 12 Open Car = 16 If driver has Full RTA **Licence** and **Autotest** experience		Closed Car = 12 Open Car = 16 If driver has Full RTA licence and Autotest experience
Type of car – young driver	Touring car	Touring car	Touring car		Touring car
Battery powered and light commercial vehicles	Subject to **Official Documents**	Subject to **Official Documents**	Subject to **Official Documents**		Subject to **Official Documents**
Must be driven to event	No	No	No		Yes

Note: Chapter 7 Technical Regulations applies in addition to App.3 of this Chapter.

*** Unlimited when Driver holds a Full RTA Licence.**

CHAPTER 19 AUTOTESTS

Appendix 9 - Drawings

Drawing number 1

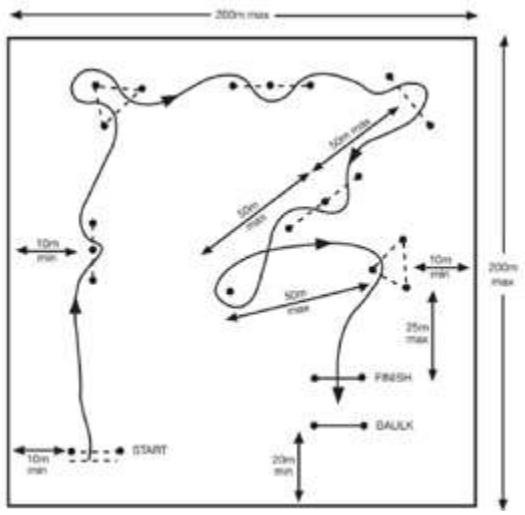

Drawing number 2

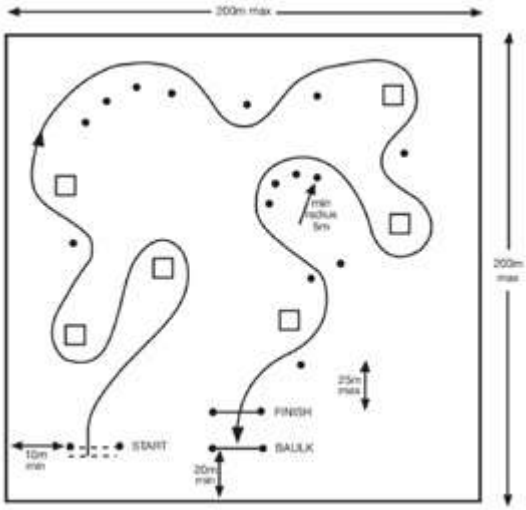

Penalty Table

PENALTY TABLE		Marks lost		
		AutoSOLO	*Autotest*	*PCA*
(a)	Each minute late in reporting at the start or a restart	5	5*	5*
(b)	Not attempting or being ready to attempt a test when instructed to do so	20*	20*	20*
(c)	Not performing a test correctly, other than in (d) or (e) or not completing the test or making a false start	20*	20*	20*
(d)	Striking any barrier, wall or marker or crossing the boundary of a test (per mistake)	5	5	5
(e)	Failing to cross or stop at any line or specified position as required in a test (per mistake)	5	5	5
(f)	Every second (and fraction) taken to complete test	1 and fraction	1 and fraction	1 and fraction

*Plus the lowest by any **Competitor** in the class making an attempt correctly on that run. The maximum penalty (including time) for any test cannot exceed penalty (b) or (c) above. All unless otherwise specified in the **Official Documents**

Chapter 20

Cross Country

CHAPTER 20 CROSS COUNTRY EVENTS

This Chapter must be read in conjunction with Chapters 1-11 as appropriate.
This Chapter is separated into the following appendices:

App.1 Organisers Regulations - All Events

App.2 Organisers Regulations - All Events using the Highway

App.3 Organisers Regulations - Definitions of Event Sections using the Highway

App.4 Organisers Regulations - Trials and Un-timed Events

App.5 Organisers Regulations - Timed Events

App.6 Competitors Regulations - All Events

App.7 Competitors Regulations - All Events using the Highway and Hill Rallies

App.8 Competitors Regulations – Trials and Un-timed Events

App.9 Competitors Regulations – All Timed Events

App.10 Technical Regulations

App.11 Charts and Diagrams

App.12 PR Guidance

App.13 Technical Regulations for Junior Trials Vehicles

CHAPTER 20 CROSS COUNTRY

Appendix 1 - Organisers Regulations – All Events

1. General

1.1. These **Regulations** are supplemented by **Apps 2 - 5** inclusive as appropriate to the type of **Event.**

1.2. An **ASN Organising Permit** is required for any form of **Cross Country Event** and is issued at the sole discretion of the **ASN**.

1.3. The **ASN Organising Permit** number and the **Competition Authorisation Office (CAO)** authorisation numbers where applicable must be included in the **Final Instructions.**

1.4. A **Recognised Club** will only be allowed to run **Events** up to **Interclub** status unless the **ASN** has specifically approved an application for **National** or **International** status.

1.5. Every practicable precaution must be taken to avoid depositing mud or soil on the public highway when leaving private property.

1.6. **Warning Notices** as required by **Ch.3 App 3** must be displayed.

1.7. **Organisers** should be aware of the nearest hospital and the best route there in case of incident.

1.8. The **Organisers** of **Events** on a single site must have on site at a pre-identified locations a **First Aid Kit** in compliance with requirements for 11-20 employees as specified in BS 8859-1:2011 (and including an eye wash).

1.9. No person under 14 may act as a **Marshal** or **Assistant Marshal** unless under the direct supervision of a **Marshal** over 18 years old.

1.10. **Competition Licences** should be signed by the **Clerk of the Course** if the holders complete the **Event** without any adverse report. Signatures may be obtained by both **Driver** and **Navigator.**

1.11. The use of the public forest estates managed by **Natural Resources Wales, Forestry and Land Scotland** and **Forestry England** must have been approved by the **ASN**. Permission must be applied for by an annually specified date prior to the Forestry year (which runs 1 January - 31 December).

1.12. All **Cross Country Events** using public forest estates are restricted to the tyres defined as **All Terrain** in **App 10 Art.7**.

1.13. The **Clerk of the Course** for either a **Competitive Safari** or a **Hill Rally** of **National** status or above must hold a valid **ASN Clerk of the Course Licence**. For details of retention and upgrading see **Ch.5 Part A App 5 Art.22**.

2. Official Recovery

2.1. Except **Challenge Events** and **Team** and **Winch Recovery Events** all recovery operations must be under the control of the **Clerk of the Course**.

2.2. All equipment to be used by the **Official Recovery Teams** must be inspected prior to the start of an **Event** and the **Clerk of the Course** must be satisfied that it is in good condition and adequate for the purpose intended.

2.3. All **Official Recovery Teams** should be sited by the **Clerk of the Course** and the method used in recovering stranded **Competitors** must be specified in the **Official Documents.**

2.4. It is recommended that all vehicles used for **Official Recovery** should have any front or rear windows whether glazed or not covered with a metal mesh expanded metal or gauze. This is particularly important where ‘snatch’ recovery is to be employed.

3. Fire Extinguishers

3.1. At each section **Organisers** should provide fire extinguishant of a minimum 9kg total capacity in units of

not less than 6kg each suitable for extinguishing vehicle fires.

3.2. This extinguisher can be carried by a **Section Marshal** escorting **Competitors** around the various sections.

3.3. Where **Sections** are closely grouped one extinguisher located at a clearly visible central point is permitted.

4. Footpaths Bridleways and Restricted Byways

4.1. The **Organisers** of any **Cross Country Events** (competitive or recreational) crossing or using a Footpath Bridleway or Restricted Byway whether competitively or not must appoint a **Liaison Officer** to verify the status of any track or path along the route ensure compliance with Section 33 of The Road Traffic Act 1988 and:

a. Obtain permission from the Landowner and any occupiers and authorisation from the Highway Authority in accordance with Section 33 of The Road Traffic Act 1988 (unless the route is already a way of higher status). Any conditions laid down must be adhered to.

b. Notify the Police (clarifying the nature of the event).

c. Notify the National Parks (if appropriate).

d. Notify the Parish Council.

4.2. All locations must be adequately marshalled by **Officials** who are well briefed and properly identified.

4.3. One **Official** must be appointed for each section to ensure that the **Event** does not unduly inconvenience other users e.g. horse-riders walkers cyclists.

4.4. The **Liaison Officer** must have a good working knowledge of the **Rights of Way** affecting the **Competition.**

4.5. Alternative routes for other users of the **Rights of Way** must be signposted. **Warning Notices** as appropriate and the **Safety Code** should also be on display in all areas.

4.6. Instructions to Competitors in Official Documents for Events affecting Footpaths or Bridleways should include the following warning:

"This **Event** is routed along and / or across Rights of Way. **Competitors** must exercise caution and reduce their speed accordingly near other users. Be especially careful near horses. Slow down stop and switch off your engine if necessary."

5. Judges

5.1. **Judges** may be appointed to adjudicate on any infringements of the **Regulations** including:

a. Touching markers.

b. Conforming with the course.

c. Remaining seated in accordance with the **Regulations.**

d. Stopping forward motion.

e. Noise.

f. Baulking.

g. Entitlement to a re-run.

6. Spill Kits

6.1. At each section **Organisers** must provide at least one **Medium Spill Kit.**

6.2. This **Spill Kit** can be carried by a **Section Marshal** escorting **Competitors** around the various sections.

6.3. Where sections are closely grouped one spill kit located at a clearly visible central point is permitted.

6.4. For all **Hill Rallies, Competitive Safaris, Point to Point Challenge Events** and **Orienteering** a **Medium Spill Kit** must be located at the start of the **Course,** each **Special Stage** or **Section.**

CHAPTER 20 CROSS COUNTRY

Appendix 2 - Organisers Regulations – All Events using the Highway

1. General

1.1. These **Regulations** are supplemented by **Apps.1** and **3–5** inclusive as appropriate to the type of **Event** and **App.12** in respect of necessary **Public Relations.**

1.2. The **Official Documents** must specify the time at which **Competitors** must report at the **Start** and whether public roads are used to link sections of the **Competition.**

1.3. Any **Competition** traversing a **Highway** in England Wales or Scotland is subject to the provisions of the **Motor Vehicles (Competitions and Trials) Regulations.**

1.4. Application for authorisation of an **Event** must be made to the **Competition Authorisation Office (CAO)** at **ASN** or for Scotland to the **Royal Scottish Automobile Club (RSAC)**. Details of the **Authorisation Procedures** are available from **ASN** and **RSAC** as appropriate.

1.5. Application for an **ASN Permit** must be made in accordance with **Ch.3** prior to the **CAO Authorisation** being granted. The **Permit** itself is only validated after **Authorisation** has been granted.

1.6. In the case of road courses route selection is subject to **ASN** approval. Applications must include a detailed itinerary giving the exact distances to be covered.

1.7. The **Organisers** of all **Events** using the **Highway** must undertake effective **Public Relations** work in accordance with **App.12.**

1.8. Except **Hill Rallies Competitors** must not be required to travel more than 100 miles in a **Highway** or to perform any task or solve any problem that is likely to inconvenience or offend other road users or the public.

1.9. Except **Hill Rallies Competitors** must not be required to arrive at any point other than the **Finish** at or by a specific time.

1.10. Except **Hill Rallies** if an overall time limit is set for an **Event** it must be possible to win without exceeding an average speed of 10mph from **Start** to **Finish.**

1.11. **Organisers** (except **Hill Rallies**) must familiarise themselves with the medical and ambulance facilities along the route.

1.12. In the case of a **Treasure Hunt** no merit must attach to being the first to arrive at the **Finish** or any other point.

1.13. **Vehicles** should be checked for **Noise** by qualified **Driving Standards Observers** before the **Start** and along the route and noisy cars stopped if necessary.

1.14. Any **Holding Controls** should be located to avoid public nuisance. Sensitive areas along the route should be drawn to **Competitors'** attention. **Marshals** should be well briefed and readily identified.

1.15. Except for **Hill Rallies** the location of all '**Give Way'** junctions on the route must be issued to **Competitors** with clear instructions as how to deal with them (i.e 'must stop' or 'per Highway Code').

1.16. Instructions on sensible use of the roads should be issued including the following:

a. Closing of gates etc.

b. Clearing of roads at **Section** ends.

c. Following the 'Country Code' failure of which can lead to disciplinary action.

2. Duties and Responsibilities of the Clerk of the Course

2.1. In addition to the duties detailed in Ch.5 Part A App.5 the **Clerk of the Course** should ensure:

a. The **Organisation** and **Regulations** for the **Event** meet the requirements of the relevant Statutory Instruments.

b. Reasonable precautions are taken in the selection of route time of day control of spectators etc to avoid inconvenience to the general public.

c. Where the farming community may be affected details of the **Event** are sent to the **County Secretary** of the local National Farmers' Union and any other relevant **National** bodies.

d. The appointed **CAO Route Liaison Officer** for each of the Counties and National Parks through which the route passes is consulted about the draft route at least three months before the **Event** and before submission to the **CAO** particularly where special **Public Relations** work is required in sensitive areas. The **Route Liaison Officer** may:

i. Ask to see all paperwork relating to the **Event** including **PR** sheets.

ii. Request the **CAO** to suspend Authorisation or the **ASN** to suspend the **Permit** until satisfied with the route and the effectiveness of the **PR** work.

iii. Require the **Clerk of the Course** to order re-routes to avoid areas of particular concern.

e. Exercise discretionary judgement on where competitive sections may be run and their length and withhold agreement to the route if not satisfied with any aspect of the organisational standards or route planning.

f. Private property whether on the **Event** route or a link section is not to be used without written permission from the landowner or authorised agent.

g. Wherever possible the route should be checked for possible damage immediately before and after an **Event.**

h. When the **ASN** medical and safety radio frequency (81.575Mhz FM and 81.5375Mhz FM) is to be used it must be operated in accordance with Ofcom and **ASN** licensing requirements available on request from the **ASN**.

3. Time Schedule

3.1. **Competitors** on a **Public Highway** must be controlled by a predetermined speed schedule unless they are allowed to complete the **Event** in their own time.

3.2. The **Event** time schedule must not lead **Drivers** to exceed any statutory speed limits or involve speeds which might be considered dangerous or unreasonable in the light of prevailing traffic conditions and the nature of the route.

3.3. No time or speed schedule should be imposed which requires or encourages **Competitors** using a road open to the public to achieve an average speed between any two points which exceeds the following limits:

a. 30 mph for all roads other than motorways

b. 60 mph for motorways

c. 25 mph for vehicles subject to a speed limit (such as vans)

d. 20 mph for neutral sections (except on M A or B class roads).

3.4. There must be no bonus for exceeding the specified average. **Competitors** must be given in advance all the information necessary to enable them to calculate the speed which they are being asked to average.

3.5. For those portions of the route being navigated by map references the direction of approach to controls should be specified and penalties imposed for approaching from any other direction whenever the country being traversed makes this possible without destroying the need for competitive skill.

3.6. The use of gated roads should be avoided if possible.

3.7. If **Competitors** are to traverse a gated road then adequate arrangements must be made to ensure that all gateways are manned by **Marshals** to ensure that no **Competitor** is required to open a gate and that all gates are closed after the **Competition.**

3.8. Occupiers of land adjacent to the road must be advised in advance of the **Competition**.

3.9. The use of single-track roads should be avoided if possible during daylight but if used the speed set must be lowered as appropriate.

3.10. Those sections of an **Event** involving difficult navigation by map references or a detailed route card must be scheduled so that no **Competitor** is traversing minor roads during the morning or evening hours when normal farm traffic may be expected unless the required average speed is not more than 20mph.

3.11. No **Competitor** is allowed to drive more than 200 miles continuously without a break and there must be a rest period of at least one hour for each **Driver** at intervals of not more than 200 miles.

3.12. Any **Event** which runs for more than 14 hours must include a rest halt of at least two hours unless previously agreed with the **ASN**.

4. Controls

4.1. **Controls** must be sited at locations with adequate space for **Officials'** and **Competitors'** cars to stop without affecting non-**Event** traffic.

4.2. **Controls** must be sited at least 500m from occupied houses except where written approval has been obtained from the occupants.

4.3. All controls must be clearly identified at the roadside.

4.4. **Controls** at which **Competitors** are required to stop to record a time and which are on the **Public Highway** must not be less than two miles from any adjacent control.

4.5. **Competitors** must be provided with all necessary regulatory information at or before their starting time.

4.6. **Competitors** must be started on the road sections of an **Event** at intervals of one minute and leave the start in numerical order unless the **Official Documents** specify a longer time interval or a different order.

5. Official Documents

5.1. In addition to Ch.3 App.10 Art.3 the **Official Documents** must clearly state:

a. The type of **Event** that is being organised and whether or not there will be standard sections, special stages, regularity sections, trials sections or other types of test.

b. When details of the route or any section or stage will be issued and

c. Any maps (and their scale) required and any modification of App.9 Art.6.9 In any dispute concerning mileages these shall be calculated in accordance with 1:50000 OS maps (or equivalent local maps).

d. The type of timing to be used.

e. A reminder of which provisions of the **Technical Regulations** apply.

f. Whether or not **Vehicles** are required to be taxed and insured for use on the **Highway.**

g. Whether **Competitors** are required to carry **Competition Numbers.**

h. Whether servicing is permitted and if so then how the service vehicles will be identified.

i. If competing cars or **Service Vehicles** are required to carry any identification markings then the name of the **Organising Club** must be incorporated on the identification.

j. Any information which is required in order to comply with **Competitors Regulations** regarding the order and location of **Controls** in the **Route Book** or **Card** and verification of conformity.

5.2. All **Official** bulletins, **Permits** and **Authorisations** times and results unless issued within 2 hours of the last **Vehicle** finishing the **Competition** must be published on an **Official Notice Board** the location of which must be notified to **Competitors**

5.3. **Stewards** (or **Observers** for the upgrading of an **Event**) should be supplied with a complete marked map of the route prior to the date of the **Event** and a set of all instructions and documents and **Route Cards** that are issued to **Competitors** and **Officials** as soon as they are available.

5.4. The **Road Book Route Card** or **Time Card** shall clearly:

a. Indicate the description of each section (**Standard Neutral Transport Regularity Trial** etc).

b. Specify the time allowed to traverse the route between each **Time Control** and all the information necessary to enable **Competitors** to comply with the applicable **Event Regulations**.

c. Indicate what information the **Organisers** require to be recorded and the places at which these records will be made except in relation to **Driving Standards Observers.**

d. Indicate which checks will be manned by **Officials** except checks established in except in relation to **Driving Standards Observers.**

e. Specify which portions of the route shall be timed to less than one minute.

f. Indicate any 'out of bounds' areas to be respected.

g. Indicate the position of all **Stop** signs along the route any other junctions at which **Competitors** are required to stop and any areas where they are required to observe special restrictions (ie Quiet Zones etc).

h. Specify the order in which **Controls** and **Checks** must be visited.

6. Noise Testing

6.1. Prior to the **Start** all **Vehicles** including those of **Officials** who are expected to follow a substantial part of the route must pass a **Noise** test conducted by an **Environmental Scrutineer** using a **Noise** meter as prescribed by the **Technical Regulations.**

6.2. This test will prohibit any vehicle with a reading over 100dB(A) from starting unless the **Official Documents** specify lower levels.

6.3. All measurements refer to the 0.5m test mandated by **Ch.7 App.8 Art.2**.

6.4. **Organisers** must make arrangements for a suitable site to be available for testing and ensure that adequate personnel are appointed.

6.5. A further **Noise** test for **Competitors** and **Course Cars** must be made on the road sections. These must be manned by a **Driving Standards Observer** or experienced **Judges** or by **Judges** using a **Noise** meter. They have the authority to penalise **Competitors** on the spot and their findings must be recorded in the results of the **Event** whether or not any **Competitor** has been **Disqualified**.

6.6. The **Noise** test **Official** may also act as a **Driving Standards Observer.**

7. Eligibility Checks

7.1. At **Events** involving different **Classes** of **Vehicle** arrangements to undertake eligibility checks should be available prior to the **Competition** or on conclusion.

7.2. All **Vehicles** including **Course Cars** must comply with the relevant **Technical and Safety Regulations**.

7.3. Checks may be carried out both before and during an **Event**.

7.4. The **Chief Scrutineer** must be available throughout the **Event** to ensure that the **Technical Regulations** are complied with.

8. Timekeeping

8.1. An **ASN**-approved **Rally Timekeeper** should be appointed as a **Chief Timekeeper** for any **Event** where timing is to less than one minute.

8.2. The **Chief Timekeeper** appointed for the event is responsible for the issuing of timing equipment and ensuring that the **Timekeepers** who will be using the equipment are competent in its use.

8.3. The **Chief Timekeeper** must be able to deal with operational problems affecting timing equipment and be capable of dealing with queries arising from the **Time Cards.**

8.4. Any section of an **Event** which has timing to less than one minute must be timed by certified equipment digital clocks to **ASN** specification R or E/B recording clocks printing to seconds or automatic apparatus.

8.5. All official clocks or watches must be set to GMT / BST time.

8.6. Any official timepiece timing to the minute which is not within 15 seconds of GMT / BST or any official timepiece timing to the second which is not within five seconds of GMT / BST will be disregarded.

8.7. Times will be recorded to whole minutes unless the **Official Documents** state otherwise.

8.8. Any portions of an **Event** to be timed to seconds will be clearly indicated in the **Road Book Route** or **Time Car.**

CHAPTER 20 CROSS COUNTRY

Appendix 3 - Organisers Regulations - Definitions of Event Sections using the Highway

The following definitions and restrictions are common in all categories of **Cross Country Event.**

1. Standard Sections

1.1. If timed to the second **Standard Sections** should not:

a. Pass through any area with over 20 occupied dwellings within a 300m radius of the route unless with written agreement from all the householders and **ASN** permission.

b. Start before 23.59 or finish more than one hour after sunrise.

c. Include any point where **Competitors** are required to observe special restrictions on their driving behaviour except for observing signs warning of natural hazards (which may be erected by **Organisers**). 'Quiet Zones' or other restrictions are specifically forbidden.

d. Join or cross any A-class road except where there is a manned control at which **Competitors** must stop.

e. Start on or use an A-class road continuously for more than 200m.

1.2. When timed to less than one minute **Competitors** must not use any private property other than footpaths and bridleways for which approval has been granted.

1.3. **Organisers** must not:

a. Offer any award for **Competitors** who equal or improve upon the time schedules for individual **Sections** nor have any awards for the fastest times or least penalties on any **Sections**

b. Operate a **Flying Finish** time control

c. Include any road with a 30 or 40mph limit without the express permission of the **RLO**

d. Require **Competitors** to average in excess of 30mph.

2. Neutral Sections

2.1. **Neutral Sections** are used to take **Competitors** through **PR**-sensitive or densely populated areas and must comply with **Art.1.3 above.**

2.2. **Neutral Sections** be completed by **Competitors** without the use of auxiliary lighting except as legally required in fog or falling snow. **Organisers** must remind **Competitors** of this requirement in the **Official Documents**.

2.3. Neutral **Sections** should not:

a. Be timed to less than one minute.

b. Allow **Competitors** to make up time on the public road.

c. Have any lateness penalty applied except maximum lateness.

d. Have an average speed of more than 20mph except on M A or B class roads.

3. Regularity Sections

3.1. **Competitors** must be informed in advance of the locations of the **Start** and **Finish** of any **Regularity Sections**.

3.2. Each **Section** must contain at least one Intermediate **Time Control** the location of which must not be given to **Competitors** in advance.

3.3. **Competitors** must however be advised in writing before entering such a **Section** whether they are required to stop at Intermediate **Time Controls** which must be identified by a **Control Board.**

3.4. Adherence to the time schedule in a **Regularity Section** is assessed by comparing the time of arrival at any **Intermediate Time Control** (or the **Finish Time Control**) with the time of arrival at the preceding **Time Control.** Timing whether or not the **Vehicle** is required to stop is based on the moment a car enters the **Time Control** area.

3.5. Penalties which must be specified in the **Official Documents** are imposed for stopping within sight of but outside the area of any Intermediate **Time Control** (or the **Finish Time Control**).

4. Transport Sections

4.1. **Transport Sections** are used to move **Competitors** between other types of **Section** where the route is not **PR** sensitive or densely populated.

4.2. **Transport Sections** must also comply with **Art.1.3 above.** and **2.2 above.**

4.3. If using roads with 30mph or 40mph limits in force **Organisers** must impose a lower average speed commensurate with the proportion of restricted roads in the **Section**.

4.4. **Transport Sections** must not:

a. Be timed to less than one minute.

b. Be less than four miles in length.

c. Have any lateness penalty applied other than for maximum lateness.

5. Road Sections

5.1. Road **Sections** comprise any **Sections** of a route on a **Hill Rally** (excluding control and service areas) whether on the **Public Highway** or not and which link **Special Stages.**

5.2. When on the **Public Highway** these **Sections** must comply with **Arts.1.3 – 4.4** above (except **Art.1.3a**).

6. Trials Sections

6.1. A **Trials Section** is a **Test** laid out over undulating ground designed to bring Competitors to an involuntary stop.

6.2. The **Course** comprises a series of ‘gates’ defined by marker canes where **Competitors**’ performance is measured according to the number of gates ‘cleared’ without stopping leaving the **Course** or touching a **Course** marker.

7. Special Stages

7.1. **Special Stages** are timed **Sections** run on roads or land for which the **Event** has exclusive vehicle access or on public roads officially closed for motor sporting purposes.

7.2. If run partly or wholly on unsealed surfaces they should be organised so that no **Competitor** achieves an average speed in excess of 50mph.

7.3. **Special Stages** should be over a distance of not less than a half mile.

7.4. No stage exceeding 20 miles may be run without written permission from **ASN.**

7.5. **Special Stages** should not:

a. Include any **Checks** or **Controls** or other requirements which might require or encourage **Competitors** to stop.

b. Use any **Sections** of a **Venue** in opposite directions at the same time unless there is at least a 15m separation between the two routes with a continuous barrier. Cross-roads used twice must preserve this separation. The barrier must consist of one or more of the following: tyres banded in threes straw bales earthbanks or similar immovable objects. Motorway cones or blocking tape are not suitable.

c. Use any currently or previously licensed **Race Speed** or **Kart Circuit** or any airfield (disused or

otherwise) unless **ASN** has specifically approved the stage layouts and safety precautions.

d. Be routed closer than 75 metres to any parked aircraft unless there is a solid physical barrier at the edge of the course protecting the aircraft and a gap of 45 metres from the barrier to the aircraft.

CHAPTER 20 CROSS COUNTRY

Appendix 4 - Organisers Regulations – Trials and Un-timed Events

1. Cross Country Vehicle Trials

1.1. These trials must be organised in accordance with App.1 and App.2 and App.3 and App.12 as appropriate and the use of road sections should be avoided.

1.2. The **Official Documents** must clearly state if the highway is to be used (see App.2 Art.1).

1.3. Where applicable **Competitors** should be split into equal groups which should start at different observed sections simultaneously.

1.4. The **Start** and **Finish** of observed sections must be marked by signs and the **Starts** should be reasonably flat and wide so that all **Competitors** can at least enter the Section.

1.5. The layout of sections should take account of the location of possible failure points and particularly for **Tyro Trials** safe exit routes.

1.6. The layout should facilitate marshalling by the minimum possible number of **Officials.**

1.7. **Sections** should be as wide as possible to allow a choice of route and as winding as possible to place a premium on driving skill (although the radius of all corners must be adequate for all vehicles entered).

1.8. **Course** markers should not be placed against trees.

1.9. The use of trees or natural hazards as course boundaries should be avoided.

1.10. If possible alternative routes should be planned in case of changes of weather condition.

1.11. It is recommended that **Sections** be laid out using a minimum of 10 pairs of marker stakes (see App.11 Chart 5) of a minimum height of 1m and with colour coding to clearly identify each side of the route.

1.12. Metal rod markers should not be used.

1.13. Markers should be placed to avoid the likelihood of **Competitors** putting all wheels out between markers or where they are likely to be moved by bushes or branches.

1.14. Clearly visible sub-section numbers should have a minimum figure height of 50mm.

1.15. If sub-section numbers are not placed on both sides of the route they should be on the right-hand side with corresponding guide markers on the left.

1.16. Sub-section numbers should be closely grouped in areas of expected failure.

1.17. A minor proportion of the sections can be timed but any time penalties must be related using a published formula to points lost on a section.

1.18. Timed sections must be a maximum of 200m long and the maximum time allowed for the section shall be stated.

1.19. Approaches to and exits from sections must not present any unreasonable hazard or difficulty.

1.20. There should be sufficient **Marshals** at each observed section to ensure safety procedures are followed and adequate **Judges** in attendance (see App.1 Art.5).

1.21. **Organisers** may at any convenient time after the start of a **Competition** require any **Competitor** to increase or decrease their minimum permitted tyre pressure by a maximum of 5lbs/sq.in. This decision must be advised to **Competitors** in writing and sufficient time allowed for them to comply.

2. Junior Trials

2.1. **Junior Trials** must be organised in accordance with Art.1 above and at all times during these **Events Vehicles** may only be driven under the instruction of an **Official**.

2.2. Where a **Junior Trial** is held concurrently with another **Events** at the same **Venue** the area for the **Junior**

Trial must be adequately separated and clearly defined.

2.3. Special consideration must be given to the terrain chosen particularly regarding side slopes and drops and water should generally be avoided.

2.4. Where present the maximum depth of any water must be 0.2m.

2.5. There are three **Classes** of **Junior Trial**: **Novice, Intermediate** and **Expert.**

2.6. The maximum permitted gradients for each is as follows:

	Novice	Intermediate	Expert
Longitudinal gradient	50%	60%	N/A
Transverse gradient	25%	35%	N/A

2.7. An **ASN Observer** may be appointed at **Junior Trial Events.**

3. Tyro Trials

3.1. These must be organised in accordance with **Art.1 above** of this Chapter and the following:

a. The terrain chosen should ensure that vehicles do not catch any bodywork on approach ramp breakover or departure angles and consideration should be given to the **Vehicles** entered when laying out sections.

b. Any longitudinal gradient must be 50% maximum.

c. Any transverse gradient must be 25% maximum.

d. The depth of any water must be 0.3m maximum.

3.2. **Vehicles** must be capable of traversing sections without making contact with any trees bushes or other natural features.

3.3. No features may be included within sections which are likely to cause damage to the underside of competing **Vehicles.**

3.4. It is recommended that a non-competitive section is provided in the itinerary so that unlicensed and less experienced drivers are afforded the opportunity to familiarise themselves with their **Vehicle** and its controls without penalty and to be observed by the **Clerk of the Course** before the **Competitio**n starts.

4. Winch Recovery

4.1. The aim of these **Events** is to safely and precisely winch an object between two points via gates and different routes as defined in the written instructions. They must be organised in accordance with **App.1 Arts.1 – 5** and the following:

a. The **Course** can be laid out over any type of terrain but must be on private ground in an area prohibited to spectators. It must be taped or roped off to indicate the boundary to **Competitors** and spectators.

b. Natural anchorages may be used at the discretion of the **Clerk of the Course** but must be protected from damage.

c. All objects to be recovered must have a good quality chain attached to the satisfaction of **the Clerk of the Course**. If the object is a **Vehicle** then all glass must be removed where appropriate. The steered wheels may be locked in any position and one or more wheels may be removed.

d. The **Clerk of the Course** may stop a team if their mode of recovery is considered likely to be dangerous to **Officials**, **Competitors,** spectators or the natural terrain.

e. **Penalty** points will be awarded if any gate or previously specified object is touched by either the object or team.

f. The **Organisers** will allocate **Competition Numbers** at random and **Teams** will start in numerical order.

5. Promotional Events

5.1. These are non-competitive **Events** designed to enable participants to experience driving their **Vehicles** off- road and to introduce them to organised off-roading. They must be run in accordance with **Ch.3 App.7** and the following:

a. They must consist primarily of a liaison route or routes wholly off the **Public Highway** which may also include optional simple and non-damaging trials type sections.

b. The liaison routes and any special sections should be clearly marked and adequately marshalled.

c. **Clubs** may not organise more than three **Promotional Events** per year.

CHAPTER 20 CROSS COUNTRY EVENTS

Appendix 5 – Organisers Regulations – Timed Events

1. Cross Country Vehicle Timed Trials

1.1. These **Trials** must be organised in accordance with App.4 Art.1 and the following:

a. The instructions must state the maximum time and the target time allowed to complete each section.

b. The target time must be set at no more than 22mph (10m/s) average.

c. The maximum length of any **Timed Trial** section must not exceed 320m.

d. **Events** must be timed using equipment as specified in Art.3.5 below**.**

e. Each section must be clearly identified (in accordance with Ch.3 App.3**)** and must be a prohibited area for all persons except **Officials** and those **Competitors** attempting the section.

f. The **Chief Scrutineer** at a **Timed Trial** must be appointed from the list of **ASN Technical Officials.**

2. Competitive Safaris

2.1. **Competitive Safaris** must be organised in accordance with App.1 and the following:

a. All **Courses** must be on private ground and should be laid out at one venue only.

b. **Timed Sections** must run over roads or tracks from which all **Vehicle** and animal traffic has been excluded. These need not be marked on definitive maps.

c. The route should be made as safe as possible and unmistakable for **Competitors** and spectators.

d. Means of access both to the section and to the site should be closed by barriers and signs to prevent any non- competing **Vehicle** gaining access.

e. Warning notices as detailed in Ch.3 App.3 should be displayed and areas of particular danger (eg escape routes) should be marked with signs as specified.

f. It should be impossible for anyone on foot to get on to any **Stage** through normal access roads or tracks without:

i. Being aware of it.

ii. Having been seen by an **Official.**

iii. Having seen a warning notice.

iv. Having seen the **Safety Code**.

g. The **Course** can involve trials type sections the surmounting of natural obstacles or hazards or points at which the **Crew** may be required to dismount to perform a set task.

h. Wherever possible the **Course** should be not less than one mile long and where the terrain makes this impossible at least a quarter mile long.

2.2. **Classes** in **Competitive Safaris** are free but must be stated in the **Official Documents**.

3. Timing

3.1. The average speed must not exceed 30mph unless run in accordance with minimum safety requirements of a **Hill Rally Special Stage** when the average speed must not exceed 50mph. **Competitive Safaris** timed in excess of 30mph shall be referred to as **Safari Plus**.

3.2. No **Competitor** exceeding the specified average speed should gain any advantage nor be penalised.

3.3. **Competitors** must not be offered any award for equalling or improving upon the target time or achieving the fastest times or least penalties for such sections.

3.4. The **Final Results** must include a statement of the **Course** length.

3.5. For **Clubmans Events** the following is strongly recommended. Interclub and higher **Event**s must be timed by:

a. Certified equipment.

b. Digital clocks to **ASN** Specification R or E/B.

c. Recording clocks printing to seconds or

d. Automatic apparatus.

3.6. All times recorded must be to the previous whole second only.

3.7. Where timing is actuated by a light beam then **Vehicles** must be positioned at the Start with the part which will break the beam 1 to 2 metres behind the beam.

3.8. Where an **Event** is timed manually and the Start **Marshal** has instructed a **Competitor** that they are next to start the starting procedure shall be either of the following:

a. The **Marshal** will give a loud verbal indication of 30 seconds to go 15 seconds 10 seconds and 5 seconds and then count down verbally each second 5-4-3-2-1-GO. Upon the **Signal** GO a visual starting **Signal** must be given which will normally be the raising of a flag from the bonnet (not the windscreen). Any other visual **Signal** to be used must be described in the **Event Official Documents**. False starts will be penalised in accordance with **App.11 Charts 3.h** or **4.h.**

OR

b. Before the illumination of the green light indicating that a **Competitor** may start a red light is illuminated warning that their countdown is imminent. The **Official Documents** must specify the countdown method. Timing will start from the green light whether or not the **Competitor** starts immediately on its illumination.

3.9. **Course**s and **Stage**s where **Competitors** are required to start at intervals of less than one minute may dispense with the '30 seconds to go' advance warning. This procedure must be advised in the **Official Documents**.

4. Course Organisation

4.1. There must be adequate communication between **Start Finish** and intermediate points.

4.2. Adequate **Marshal**s must be posted along the **Course** particularly at any potentially dangerous points at any observed section and where recovery operations may be required.

4.3. **Rescue Vehicles** must be positioned at predetermined locations to transport any injured **Crew** or Officials to the medical or first aid facilities.

4.4. Motorised reconnaissance of the **Course** is forbidden unless specifically allowed by the **Official Documents** and then only if run to the requirements of a **Promotional Event** and in a controlled convoy with lead and tail official **Course Vehicles**.

5. Course Marking

5.1. The **Course** should have a clearly marked route so that no navigation is required and all **Course** markings should comply with **Special Stage** requirements.

5.2. The correct route should be indicated to **Competitors** by arrows and signs and by physical blockage of all but the correct road.

5.3. These indications must wherever possible be consistent with the illustrations at **App.11 Chart 1** and with the following:

a. Arrowing should be reduced to a minimum and placed only at junctions.

b. Really acute bends or hazards where a drastic reduction in speed is required should be marked by a **Caution Board. Caution Boards** comprising red exclamation Marks on a white background 51cm x 38cm will be displayed on each side of the **Stage** between 40 to 50 metres before the hazard. At the hazard a pair of diamond shaped orange markers at least 150mm x 150mm will be placed each side of the **Stage**. These will be repeated in pairs on each hazard if there is more than one hazard to which the warning refers (see **App.11 Chart 1**)**.**

c. All signs should be placed approximately 1.2m from the ground. Wherever possible arrows and signs should be Dayglo red or orange and should be easily visible. To avoid confusion multiple signs on one post should be avoided.

d. Advance warning signs for junctions should be between 50m and 100m before the junction. Two arrows should be visible on the junction fixed to form a 'gate' through which the **Competitor** will pass. Arrows may be angled to show the severity of the junction indicated by one of four basic positions either vertical horizontal raised or lowered by 45°.

e. An example of the method used must be shown to **Competitors** before the **Event**.

f. Consistency with the distance of the advance warning signs from their respective junctions is important throughout the **Event** and an explanation should be included within the **Drivers** briefing.

g. A vertical arrow should confirm the correct route immediately after a junction where the **Course** is not laid out on clearly defined tracks unless the next junction is clearly visible. Where the **Course** is laid out using clearly defined tracks a confirmation arrow is not required.

h. A wrong direction should be indicated by a standard No Entry sign (a red disc with a white bar) and all but the correct road should be visibly blocked by means of tree trunks.

5.4. The location of all danger spots on the route must be clearly marked in the **Road Book** or **Stage Tulip Diagrams.**

a. Special warning signs a minimum of 51cm x 38cm and fixed on a stake must be erected in a clearly visible position.

b. The sign must show two exclamation marks and be preceded at 50m and 100m by similar exclamation marks.

c. Both signs must be marshalled throughout the **Event**.

d. Other hazards should be indicated by single exclamation signs 50m and 100m before the hazard (an **ASN** list is available to **Organisers** on request).

5.5. If a section of road is used twice on **Stage**s where the route divides or where two roads merge the junction itself should be clearly marked by a white board at least 76cm x 61cm illustrating the nature of the junction. Figures on this board should be at least 16cm high.

a. The junction should be preceded by similar signs at 100m and 200m showing Motorway-type count down diagonal bands.

b. **Judges of Fact** should be placed at the split junction to record penalties on **Competitors** overshooting and reversing back against the route of competitive traffic.

c. Where **Competition** routes merge on a lapping **Course** the angle between the two roads (prior to the common route) should be no more than 45º to each other and on joining should run separately but in parallel for at least 100m before merging.

d. Signs of a minimum size of 76cm x 51cm must be shown to **Competitors** as detailed in **App.11 Chart 2.**

5.6. Arrows must have a bright preferably Dayglo finish facing the **Competitor**.

5.7. Where the **Course** changes direction repeatedly without any natural features arrows must have a contrasting colour on the reverse side (preferably matt black or white) with tape staked at reasonable intervals to further define the **Course**.

5.8. The **Flying Finish Line** must be located a sufficient distance from the **Stop Line** to allow **Competitors** to decelerate in a controlled manner especially where they proceed directly into a **Service Area.**

5.9. Bad weather slippery conditions and the speed potential of **Vehicles** crossing the **Flying Finish Line** will require a greater distance.

5.10. The area between the **Flying Finish** and the **Stop Line** should be free from bends sharp or deceptive corners or hazards such as gates or ditches. This area is prohibited to spectators.

6. Flags Signals

6.1. During a run it may be necessary to communicate to **Competitors** the need to proceed with caution or to cease **Competition** immediately. This will be achieved by the display of a flag to oncoming **Competitors**.

6.2. **Proceed with Caution**

a. A requirement to proceed with caution shall be indicated by a **Marshal** wearing a high visibility tabard or vest displaying a held yellow **Signal**.

b. On displaying the yellow **Signal** the **Marshal** must radio the deployment to the **Event Control** detailing the cause and **Competitor** involved and must radio to **Event Control** when the yellow **Signal** is withdrawn.

c. Yellow **Signals** shall measure a minimum of 60cm x 70cm.

d. Time lost whilst proceeding under caution will be regarded as force majeure unless a re-run is authorised by the **Clerk of the Course** in accordance with the provisions of the **Official Documents** and / or any **Decision** by a **Judge of Fact** when such **Judges** have been appointed.

e. Failure to comply as instructed will incur a penalty of **Disqualification.**

f. Where **Live Recovery** is in operation the process is further detailed in **Art.8**.

6.3. **Cease Competition**

a. Where extreme circumstances make it necessary to neutralise the **Competition** e.g. where spectator safety is compromised or to authorise the movement of non- competing or rescue **Vehicles** the system of **Red Signals** must be used.

b. These **Red Signals** should be located at all locations where a rescue / emergency vehicle may reenter the **Course** following a shortcut and at each **Radio Point**.

c. **Red Signals** will be displayed at all **Radio Points** preceding the incident only on the specific instruction of the **Clerk of the Course**.

d. **Red Signals** must be prominently displayed (held out steady not waved) by a designated **Marshal** who MUST wear a high visibility tabard or vest.

e. **Red Signals** shall measure a minimum of 60cm x 70cm.

f. **Competitors** who have been shown a **Red Signal** will be given a notional time for the run or a re-run.

g. The time of the deployment of the **Red Signal** will be recorded and notified to the **Clerk of the Course**.

h. Under no circumstances will any **Vehicle** be allowed to drive in the reverse direction of the Stage.

i. The priorities in dealing with an incident are to deal first with those who are injured (whether **Competitor, Official** or spectator) by removing them in a suitable **Vehicle** if it appears prudent to do so and then to deal with the **Vehicles** if they constitute a hazard to the continued running of the **Stage** or to property.

j. Failure to comply as instructed will incur a penalty of **Disqualification.**

7. Senior Officials

7.1. The **Clerk of the Course** at a **National** or **International Competitive Safari** must be licensed as in **App.1 Art.1.13.**

7.2. The **Chief Scrutineer** at a **Competitive Safari** must be appointed from the list of **ASN Technical Officials.**

7.3. An **Event Safety Officer** should be appointed experienced in the operation of current **Competitive Safaris** who appreciates the potential problems of **Vehicles** competing in differing conditions. The same **Officer** may also assume the duties of **Chief Marshal** and can be responsible for ensuring effective arrangements are in place to supplement the general marshalling strength organised by the **Clerk of the Course** as follows:

7.4. There should be pre-determined arrangements available for summoning appropriate emergency services via rendezvous points if necessary to the scene of an incident.

7.5. Unless the complete route is visible from the **Start** or **Finish** areas there should be an effective radio communications network (excluding CB radios) operated through a nominated **Controller** under the direction of the **Clerk of the Course** linking **Officials** at the **Start Finish** and intermediate **Radio Points** with rescue and medical services.

7.6. **Radio Point** signs as follows should be displayed at and before all designated **Radio Points:**

Approximately 100m Yellow before Radio Point background

At **Radio Point Blue** Background

7.7. The **Chief Medical Officer** or **Chief Paramedic** being a **Doctor** or **ASN Registered Paramedic** is responsible – in consultation with the **Clerk of the Course** and the **Event Safety Officer** – for ensuring that the required level of medical and rescue cover is provided.

8. Live Recovery

8.1. At **Competitive Safaris** and **Hill Rallies Live Recovery** (the recovery of stranded **Competitors** whilst the **Course** or **Stage** is still live) may only be undertaken in accordance with the following:

a. The **Official Documents** must state whether **Live Recovery** will be operating at an **Event** and the Clerk of the **Course** must brief **Driver**s on the procedures.

b. **Live Recovery** can only be undertaken by dedicated **Specialist Recovery Vehicles** (**SRVs**) deployed by the **Clerk of the Course** at potentially difficult locations.

c. **Live Recovery** must not be used for accidents which must be dealt with by the appropriate medical and rescue services deployed by the **Clerk of the Course**.

d. The **SRV** must comply with **App.10 Art.14** and be equipped with appropriate tyres substantial towing points a suitable tow rope a **Yellow Signal** a roof mounted amber warning beacon and a radio (either on the **ASN** medical and safety frequency (**App.2 Art.2.1.h**) or on a PMR frequency licensed for the **Event**: CB Radio is not acceptable).

e. The **Crew** will comprise a minimum of two people who must always wear high-visibility jackets. The first will operate the **SRV** and radio communications the second will warn other **Competitors** that **Live Recovery** is in progress by displaying a **Yellow Signal** at a suitable distance ahead of the recovery location.

f. It is the **Competitor**'s responsibility to attach and detach the tow rope from the **SRV Vehicle** during **Live Recovery.** Exceptionally where available a third **Crew** member can attach and detach the tow rope and supervise the operation. Three-person **Crews** are strongly recommended for **National Events.**

g. Procedures must be identical for each **SRV** deployed at an **Event**.

8.2. The procedure for a **Live Recovery** operation must be as follows:

a. The **SRV** must report the number of the stranded **Vehicle** by radio and should not commence operations without permission.

b. The second **Crew** member then proceeds on foot to a safe distance ahead of the stranded **Vehicle** and displays a **Yellow Signal** to warn other **Competitors** that a **Live Recovery** is taking place.

c. The **SRV** must display a flashing amber beacon and flashing hazard lights at all times during **Live Recovery.**

d. In reaching a stranded **Vehicle** it must avoid travelling across or along the **Course** except in positioning itself to approach the recovery from a down-course direction and place the stranded **Vehicle** between it and approaching **Competitors**.

e. **Course Marshal**s may assist the **SRV Crew** and must ensure all spectators are kept clear.

f. Wherever practicable the stranded **Competitor** must be pulled through or over any obstruction in the direction of travel along the **Course**.

g. When the **SRV** is in position the first **Crew** member should instruct either the **Passenger** or **Navigator** of the stranded **Vehicle** (or the third **Crew** member) to attach the tow rope between the **Vehicles**. Once attached they must stand clear and indicate to the first **Crew** member that it is safe to commence recovery.

h. On completion of the recovery the first **Crew** member will indicate to the **Passenger** or **Navigator** (or third **Crew** member) that it is safe to detach the tow rope between the **Vehicles** ensure that the tow rope is properly stowed and then indicate to the first **Crew** member that it is safe to move the **SRV** clear.

i. Once the first **Crew** member reports that the **SRV** is clear the second **Crew** member can allow **Competitors** to proceed past the recovery location.

9. Hill Rallies

9.1. These must be organised in accordance with **Arts.1–8. above** and **App.1** and **2** to this Chapter and the following:

a. **Competitors** must be seeded in order of anticipated performance with the first **Competitor** having the best performance potential unless the **ASN** has given prior approval to the contrary.

b. All **Special Stage**s must not be less than a quarter mile long in demanding terrain or 1 mile in other instances.

c. Trials-type sections or tests may be incorporated within **Special Stages.**

10. Duties and Responsibilities of the Clerk of the Course

10.1. In addition to the responsibilities detailed in **Art.14 below** the **Clerk of the Course** should ensure the following **Arts.10.2-10.20**.

10.2. The use of the public forest estates managed by **Natural Resources Wales, Forestry and Land Scotland and Forestry England** has been approved by the **ASN**. Permission must be applied for by an annually specified date prior to the relevant **Forestry Year.** No contact should be made with the Forestry Commission prior to receiving approval from the **ASN** or an appointed **Forestry Liaison Officer.**

10.3. Other motor sport users of **Venues** to be included in **Special Stages** must be notified of arrangements.

10.4. The **Chief Scrutineer** must be appointed from the list of **ASN Technical Officials.**

10.5. A **Stage Commander** should be appointed for every **Stage** with the responsibility for ensuring that the **Stage** complies with the **Regulations.**

10.6. An **Event Safety Officer** should be appointed. The **Officer** should be experienced in the operation of

current **Hill Rally Stage**s and have an appreciation of the performance of **Hill Rally Vehicles** in differing weather conditions.

10.7. The **Event Safety Officer** should be assisted by a **Spectator Safety Officer** who is responsible for specific arrangements to accommodate spectators in suitable areas to prevent them accessing unsuitable areas and to make suitable access facilities for spectators' use.

10.8. The **Event Safety Officer** is responsible for ensuring effective arrangements to supplement the general **Marshal**ling strength organised by the **Stage Commander** as follows:

a. Ensure arrangements are available to every **Stage Commander** for summoning appropriate emergency services via rendezvous points if necessary to the scene of any incident

b. Unless the complete route is visible from the **Start** or **Finish** areas provide an effective radio network operated through a nominated **Controller** under the direction of the **Stage Commander** linking **Officials** at **Start Finish** and intermediate points with rescue and medical services. The frequency must be secure and either the **ASN Safety Frequency** or a privately-licensed frequency to Ofcom Regulations.

c. The **Controller** must be experienced in the use of radios and in controlling a network and must ensure the disciplined use of the radios. Where the **ASN Safety Frequency** is used the **Radio Controller** must hold a valid **ASN Controller's Licence** (Notes on radio procedure are available from the **ASN**).

10.9. Written instructions on the operation of the **Stages** must be made available to all **Officials** and **Marshals**. These must clearly establish:

a. That the number of **Vehicles** to be sent through any **Stage** prior to the **Competition** is to be kept to a minimum; that the **Crew** of each **Course** car has specific duties allocated by the Clerk of the **Course** on which they must report to the **Stage Commander** (or **Deputy**) immediately on completing each **Special Stage**; and that no **Stage** can start until the Zero car **Crew** have confirmed that the **Stage** is ready for **Competitors** and **Marshals** have any spectators on the **Stage** under their control (see **Art.12.**

b. That there must be no movement of any **Vehicle** or of the rescue services once the **Stage** has opened without the specific approval of the **Stage Commander** and then only after suspending the **Stage** and being satisfied that it is cleared of competing **Vehicles**.

10.10. On **Special Stage**s where it may be necessary to authorise the movement of non-competing **Vehicles** prior to the **Stage** being cleared a system of **Red Signals** must be in place (see **Art.6.1**)

10.11. These **Signals** can only be located at radio points and only displayed on the specific instruction of the **Clerk of the Course** or the **Stage Commander.**

10.12. **Red Signals** must be used when there is a possibility of non-competing **Vehicles** and rescue services moving on a **Stage** ahead of competing **Vehicles.**

10.13. There must always be a **Red Signal** displayed at the **Point** where rescue or emergency **Vehicles** join the route of a **Stage.**

10.14. **Competitors** must be advised in writing which **Stages** are operating this system and the procedure which they must adopt (See **App.9 Arts.6** re **Special Stages)**.

a. That under no circumstances will any car be allowed to drive in the reverse direction of the **Stage.**

b. That detailed emergency procedures and equipment have been made available by the **Event Safety Officer**

c. That the priorities in dealing with an incident are first to deal first with the injured by removing them in a suitable **Vehicle** if it is safe to do so and then to deal with the **Vehicles** if they constitute a hazard to the continued running of the **Stage** or to property

d. That no **Competitor** will be permitted a re-run of a **Special Stage**.

e. That the system of ensuring **Competitors** are positively monitored and checked through a **Stage** is

explained. **Organiser**s may either use numbered **Stage** timecards or note the previous **Competitor**'s **Competition** number with the next **Competitor** to leave the start

f. That all non-competing **Vehicles** are parked in a safe place or at least 30m from a road or track used as a **Special Stage** between a point in advance of the **Start** control and a point 100m beyond the **Finish** stop **Control.** Non-competing **Vehicles** required solely for purposes of safety may be parked at any place designated by the **Stage Commander** as suitable

g. That any road or track which can form an escape road between the start and stop controls should be kept clear and unobstructed for a distance of at least 100m bearing in mind the potential approaching speed of a **Competitor**

h. That the location of any competing car that fails to complete the **Stage** is reported to the **Stage Commander.**

i. That the information required by the **Clerk of the Course** to consider **Art.10.19 below** is available if the **Stage** is interrupted or stopped for any period of time

j. That reasonable precautions are taken to protect private property located adjacent to any **Stage** against damage.

10.15. If the normal running of a **Special Stage** is stopped for any reasons after the passage of one or more **Competitors** and it proves impossible to allow other **Competitors** to cover the **Stage** competitively the **Clerk of the Course** can give each **Crew** that has not covered the **Stage** a notional time corresponding to the slowest time set up before the interruption.

10.16. If the slowest time represents a complete anomaly the next slowest time should be retained (and so on until the 5th slowest time).

10.17. However no **Crew** which is totally or partially responsible for stopping a **Stage** can benefit from this measure.

10.18. If they finish the **Stage** they will be given the time which they actually set even if this is greater than the time awarded to other **Crews** by application of **App.7 Art.2.7.**

10.19. In any **Event** seeding **Competitors** in reverse order of anticipated performance the **Clerk of the Course** can give to **Competitors** a notional time corresponding to the fastest time set at the moment of any interruption or apply the next fastest time (up to the 5th fastest time) if the fastest time represents a complete anomaly.

10.20. The **Clerk of the Course** has the right to:

a. Impose a **Penalty** of **Disqualification** pursuant to a Judicial Hearing in accordance with **Ch.2** on any **Competitor** who causes or is part of a serious blockage on a **Special Stage** whether intentionally or otherwise if their actions prevent any other **Competitor** from completing the **Stage** competitively.

b. Impose further penalties under **Ch.2** as appropriate.

c. Appoint Officials to search **Competitors** and their **Vehicle** for unauthorised **Pace Notes.** There should be two such **Officials** one male to check male **Competitors** and one female to check female **Competitors**.

11. Special Stages

11.1. The route of a **Special Stage** may not be defined by grid references or any other method requiring **Competitors** to choose their own route.

11.2. Every effort should be made to site the **Flying Finish** at a point where **Vehicles** can be expected to be travelling slowly as a result of a preceding bend or hazard.

11.3. No practicing or testing is permitted on any **Special Stage** before any **Event** unless specifically authorised by the **ASN**.

11.4. The **Flying Finish** line must be at least 200m before the stop line which should be at least 100m before any **Public Highway.**

11.5. Bad weather slippery conditions and the speed potential of **Vehicles** crossing the **Flying Finish** line will

require these distances to be extended.

11.6. The area between the **Flying Finish** and the **Stop Line** should be free from bends sharp or deceptive corners or hazards such as gates etc.

11.7. This area must be prohibited to spectators.

11.8. All **Officials** should be clearly identifiable and wherever possible:

a. Be in visual contact throughout the length of the **Stage**.

b. Be in sight of all signs and arrows and at prohibited areas.

c. Be placed where the public are expected to arrive to watch the **Stage**.

d. Have some pre-arranged system for warning spectators of the approach of **Vehicles**.

e. Be under the control of a **Sector Marshal** if appropriate.

11.9. Where a **Special Stage** forms a continuous circuit **Competitors** must not be required to complete more than two laps.

a. **Organisers** should allow at least 100m separation from the start of the **Stage** before **Competitors** join other **Vehicles** already on the **Stage.**

b. No individual **Stage** on a multi-venue **Hill Rally** may use any particular section of road or track more than four times.

11.10. Throughout the **Event Stage Timing** will be to the preceding second using specified equipment.

11.11. The timing of any section should be recorded so that **Competitors** can ascertain its correctness. This prohibits the 'setting back' of the section finish watch.

11.12. Timing must be from a **Standing Start** to the **Flying Finish** line.

11.13. No **Competitor** should be allowed to gain an advantage by exceeding the specified average speed.

11.14. The time based on this average is referred to as the **Stage Bogey Time.**

11.15. No award can be made to **Drivers** who improve upon or equal the **Bogey Time** or for the fastest time or least penalties on such a **Stage.**

11.16. **Competitors** must not be started from any **Stage** start at intervals of less than one minute unless in accordance with the following procedures:

a. Starts of between 30 second- and one-minute interval are permitted provided no undue difficulties are foreseen and:

b. The **Stage** has no split route and does not exceed a total length of four miles if on an unsealed or mixed surface or eight miles if completely on a sealed surface.

c. The **Stage** is neither a currently nor previously licensed **Race Speed** or **Kart Venue** or an airfield (disused or otherwise).

d. No part of any **Stage** traverses the same section of route during the running of that **Stage** or as part of another **Stage** running concurrently. If the **Stage** constitutes a continuous **Circuit** it must be less than one lap.

e. **Competitors** have been seeded by the **Organisers** by performance in accordance with **Art.9.1.a above** without dispensation.

f. That suitable timing arrangements have been made at the **Finish Line.**

11.17. Authorisation for **Stages** not covered in **Arts.11.16 above** must be obtained in writing from the **ASN** and will only be considered when the following information has been submitted:

a. The individual **Stage** name number and location.

b. The length of the **Stage** and the type of surface (forest tarmac etc).

c. The average width of the road or **Track.**

d. Diagram(s) of **Venues** showing **Stage** routes and safety provisions.

e. The number of times **Competitors** are attempting the **Stage.**

f. If **Competitors** are attempting the **Stage** more than once the time interval between a **Competitor's** first and second run and the possibility of catching previous **Competitors**.

g. Whether **Competitors** attempting their second run will be interposed with **Competitors** still attempting their first run.

h. Whether the **Stage** has a split route and if so how far this is into the **Stage**. On unsealed surfaces the **Stage** must not consist of more than 2.5 miles of common route.

i. Whether extreme weather conditions will adversely affect a fair **Competition**.

j. Confirmation that suitable timing arrangements have been made at the **Finish Line**.

11.18. Any access to any part of a **Stage** whether from a car park or through entrances should be protected by warning notices as specified in Ch.3 App.3 Art.1.2 (Notice A) and Art.1.6 (Notice B) and is subject to the requirements of visibility provided at Ch.3 App.3 Art.1.8.

11.19. A copy of the **Safety Code** should be displayed at all entrances where the public are likely to enter and in areas considered to be hazardous (including escape routes and prohibited areas).

11.20. On **Stages** or **Events** where it is intended to charge for admission whether directly or by programme sales specific **ASN** approval must be obtained prior to any publicity material (which must include the **Safety Code)** being circulated.

11.21. The **ASN** will not authorise any admission charge for spectators unless adequate safety precautions for them appropriate to speed **Events** are in place.

11.22. Where the nature of a **Venue** means it is impractical to apply such precautions or access by the public cannot reasonably be controlled then only a car park charge may be made for which no **ASN** approval is required.

11.23. For **Events** with a published programme or where information is published which gives details of the location of **Special Stage**s a copy of the **Safety Code** should be included for the guidance of spectators.

11.24. The organisation of **Special Stages** should seek to ensure the route is made as safe as possible and unmistakable to **Competitors** and spectators alike.

11.25. Means of access onto the **Stage** should be closed by sufficient barriers and signs to prevent any non-competing **Vehicle** gaining access.

11.26. It should also be impossible for anyone on foot to get on to any **Stage** through normal access roads or tracks without:

a. Being aware of it.

b. Having been seen by an **Official.**

c. Having seen a warning notice.

d. Having seen the **Safety Code**.

11.27. Fire extinguishers of a minimum 9kg total capacity in units of not less than 6kg each (20lb / 9kg dry powder type) must be available in any area defined as '**Service Area'** or '**Paddock**' and any area in which competing **Vehicles** are assembled awaiting their attempt at the **Stage(s)** and at **Stage** finishes.

12. Course Vehicles

12.1. The only category of **Course Car** that may be driven through a **Stage** at near competitive speeds will be a Zero car identified by carrying markings of 0 00 or 000 as appropriate.

12.2. No other **Official** car can carry such markings.

12.3. Zero **Vehicles** must be the last **Vehicles** to traverse a **Stage** before the first **Competitor** unless the **Clerk of the Course** authorises otherwise.

12.4. Zero **Vehicles** must only stop on the **Course** in the case of emergency and must be fitted with an effective method of communicating with the start control **Officials.**

12.5. With the exception of **Class** eligibility all Zero **Vehicles** must pass the same pre-**Event** scrutiny as **Competitors**.

12.6. There must only be two **Crew** member in each **Vehicle** and they must wear helmets and seat belts and have fire extinguishers fitted as is mandatory for **Competitors**.

12.7. Both **Crew** members must be signed-on **Officials**. It is recommended that the **Driver** is a **Competition Licence** holder and that one of them has been involved in pre-**Event** planning.

12.8. No **Driver** who is barred from holding a **Competition Licence** may drive an **Official Course** or Zero car over a competitive safari **Course**.

13. Special Stages: Arrows and Signs (see also App.9 Art.6)

13.1. The **Course** for those parts of **Hill Rally Special Stages** which are run on defined tracks must be defined in accordance with Arts.5.1 - 5.3. Where the route does not follow defined tracks the **Special Stage** shall be marked as follows:

a. Pairs of arrows must be erected to form a gate; sufficient stakes should be used to ensure each arrow remains standing and indicating the correct direction.

b. The arrows must point in the direction that the **Stage** continues after the gate.

c. Consecutive gates must be approximately 100 metres apart or in sight of each other allowing for the lower seating position of **Crews** in non-production **Vehicles**. They should be approximately 6 metres wide but in soft ground where a choice of route may be given they can be approximately 20 metres wide.

d. A single warning arrow must be positioned approximately 25 metres ahead of numbered locations (rather than intermediate gates) and changes of direction of over 45° indicating the direction to be followed at the location.

e. If there is any doubt about route direction tape should be used to form a funnel in the correct direction or to define the outside of a corner.

f. Where the **Course** repeatedly changes direction without any natural features tape staked at reasonable intervals should be used to define the **Course**.

13.2. All roads and tracks used must appear on the **Competitors**' maps or any tulip diagram supplied. These should show junction or hazard numbers or letters indicate the intermediate mileages between junctions any danger spots and hazards and the direction to be taken. This diagram must be approved by the **ASN** prior to the **Event**.

13.3. Location numbers must be placed on the single warning arrow as required by Art.13.1.

a. Each digit must be black and measure 76.3mm high and 12.7mm thick.

b. They must be in a sans serif font on a white background a minimum of 147mm tall x 104mm wide (ie if there are two digits the background will be 208mm wide).

14. Multi-Use Hill Rallies

14.1. The **Official Documents** for **Multi-Use Hill Rallies** must state whether the **Public Highway** is being used or not.

14.2. No **Stage** route may be used more than twice.

14.3. For a **Stage** route to be recognised as different it must vary by at least 20% if run in the same direction or for it to be reversed.

14.4. No part of a **Stage** may be used in any one direction more than 12 times during any **Event**.

14.5. Venues where spectators are encouraged to attend should have a resident **Spectator Control Car** equipped with a PA system and a radio on the frequency to be used at the **Event**.

14.6. A **Co-Driver** who has signed-on must be carried in each competing car and no practising is allowed.

14.7. Fire extinguishers must be available in any area defined as a service area or paddock and any area in which competing **Vehicles** are assembled waiting their attempt at a **Stage**.

14.8. The **ASN** may appoint a Steward for any **Event** and will do so where an **Event** is confined to one venue.

14.9. Written **ASN** permission must be obtained in advance in respect of any other activity being held at the time of the **Event** at the venue to ensure whether suitable insurance can be arranged.

14.10. **PR** work in accordance with App.12 must be undertaken irrespective of whether or not the public highway is used on the **Event**.

14.11. The **Clerk of the Course** at a **National** or **International Hill Rally** must be licensed as required by App.1 Art.1.13**.**

15. Service Areas

15.1. All **Service Areas** should be under the supervision of a **Safety Officer** with suitable means of contacting the **Emergency Services.**

15.2. Special care must be taken to ensure that the areas are kept secure from spectators and that all aspects of **Health and Safety Regulations** are observed.

15.3. Adequate fire extinguishers must be available at the site.

16. Medical Supervision

16.1. The **Chief Medical Officer** or **Chief Paramedic** being a **Doctor** or **ASN Registered Paramedic** is responsible – in consultation with the **Clerk of the Course** and the **Event Safety Officer** – for ensuring that the required level of medical and rescue cover is provided.

16.2. Their responsibilities should include the detailed organisation of doctors and paramedics, their planning and deployment within **Stages**, the organisation of ambulance meeting points and the notification of hospitals in relation to the **Stages**.

16.3. The **Chief Medical Officer** or **Chief Paramedic** and **Event Safety Officer** in liaison with **Stage Commanders** should be aware of the evacuation routes from all **Stages** and rendezvous points.

16.4. Following consultation with the **Clerk of the Course,** the **Chief Medical Officer** or **Chief Paramedic** may appoint a suitable deputy to take over the **Chief Medical Officer's** or **Chief Paramedic's** duties in an emergency.

16.5. **Doctors** and **Paramedics** should carry sufficient equipment as they feel necessary for the performance of their duties in accordance with the provisions of the **Emergency and Medical Services Guidance Document** (Ch.11)

16.6. All accidents and incidents involving injury must be reported in writing by both the **Medical Officer** and **Stage Commander** to the **Clerk of the Course**. A completed **ASN** report form signed by the **Doctor** should be sent to the **Medical Consultant** at the **ASN**.

16.7. For **International** and **National Hill Rallies** It is recommended that:

a. The **Chief Medical Officer** is appointed from the **ASN Register** and approved for the grade of **Event** being run.

b. A senior **Medical Officer** should also be appointed for each **Stage** and be positioned at the **Stage**

start to work under the instructions of the **Stage Commander**

17. Emergency Vehicles

17.1. The equipment and licensing criteria for **Emergency Vehicles** are listed in **Ch.11.**

17.2. These **Vehicles** comprise **Recovery Units**, **Rescue Units** and **Stage Safety Units** (**SSUs**).

17.3. When selecting **Emergency Vehicles** the ability for the vehicle to maintain traction over the terrain being used is required

17.4. To maintain safety cover unless sufficient suitable licensed **Rescue Units** are available **SSUs** should be positioned to be able to provide rescue first aid and firefighting to incidents within 15 minutes (ie starting from the beginning of a **Stage** and proceeding in the direction of the **Stage**). It is recommended that an **SSU** is stationed at each **Stage** start.

17.5. It is recommended that an

a. **SSU** is stationed at each stage start.

b. **ASN-licensed Recovery Unit** or a commercially operated **Recovery Unit** is placed at or near those **Stage** start locations where a **Rescue Unit** is positioned

18. Safety Cover Requirements

18.1. At each **Venue** on a **Multi-Use Hill Rally** or at each **Stage** on a **Multi-Venue Hill Rally** there must be:

a. A **Doctor** or **ASN Registered Paramedic**.

b. An **ASN-licensed Rally** (or **Dual**) **Rescue Unit**.

c. A **Recovery Unit**.

18.2. For **Clubman**, **Interclub** and **National Multi-Venue Hill Rallies** the services listed at **Art.18.1** may be located to cover a group of up to three **Stages** in close proximity. In addition those **Stages** without an **ASN** approved **Rescue Unit** may position an **ASN Licensed SSU** at the start.

18.3. For **Clubman**, **Interclub** and **National Hill Rallies** every stage in excess of nine miles in length, in addition to the services listed at **Art.18.1**, there must be at a suitable mid-point:

a. A **Doctor** or **ASN Registered Paramedic**.

b. An **ASN-licensed Rally Rescue Unit** or an **ASN-licensed SSU**.

18.4. For **International Hill Rallies** (other than **FIA Championships**) the services listed at **Art.18.1** must be

a. At every **Stage** start

b. For every **Stage** in excess of nine miles in length in addition to the services listed at **Art.18.1** there must be a further set of these services positioned at a suitable mid-point.

19. Cross Country Orienteering

19.1. These **Event**s must be organised in accordance with **App.1 Arts.1–4.6** and the following:

19.2. There should be no merit attached to being the first to arrive at any point nor should it be necessary to arrive at any point other than the **Finish** by a specified time.

19.3. If an overall speed limit is set for an **Event** it must be possible to win without exceeding an average speed of 10mph from **Start** to **Finish.** Participants must not be required to travel more than 50 miles nor to perform any task or solve any problem that is likely to offend anybody not taking part in the **Event**.

19.4. When running an **Orienteering Event** at night careful consideration should be given to restricting auxiliary lights. Such restrictions must be specified in the **Official Documents** for the **Event.**

20. Team Recovery

20.1. Any Team Recovery **Event** must be organised in accordance with **App.1 Arts.1–4.6** and the following:

20.2. The **Event** must be on private ground.

20.3. The use of the **Public Highway** including **Rights of Way** is forbidden.

20.4. Only **Vehicles** within the same team may be on any observed section at the same time.

20.5. At each observed section **Official Recovery Teams** must be on duty in the location specified by the **Clerk of the Course**.

20.6. Rescue **Vehicles** must be positioned at predetermined locations to evacuate any injured party.

21. Point to Point

21.1. **Point to Point Events** must be organised in accordance with **App.1 Arts.1–4.6** and the following:

21.2. They must be on private property at one venue only. They can incorporate open ground tracks or roads and can include arduous or demanding areas water **Courses** and other natural obstacles or hazards

21.3. The ground should be an open area and positive steps (including the closure of tracks) should be taken to prevent **Vehicles** meeting at blind points

21.4. Only **Vehicles** from the same team may be in any point at the same time

21.5. The **Event** must be timed in accordance with the requirements of **Art.3.5 above.**

21.6. Rescue **Vehicles** must be positioned at predetermined locations to evacuate any injured party.

21.7. Adequate **Marshal**s must be positioned at each point to be visited and at locations overlooking the areas that **Competitors** will cross.

22. Challenge Events

22.1. **Challenge Events** must be organised in accordance with **App.1** and **App.2** and the following;

22.2. The aim of the **Event** is to drive tow and or winch a **Vehicle(s)** to the various identified points within the **Competition** site the location of which will be indicated in the **Official Documents**.

22.3. At each location will be a means to prove that the **Vehicle** has reached the location this will be identified by a number to verify it is the desired objective and will be attached to a fixed point by a cable. A score card (or other device) (attached by the **Scrutineer** in a consistent point on all **Vehicles**) must be marked as proof that the location has been visited. The **Vehicle** must negotiate close enough to mark the scorecard without detaching either component.

22.4. The **Official Documents** will specify:

a. whether the **Event** is for single **Vehicles** or teams of **Vehicles**.

b. whether there is a class structure and specify the eligibility requirements for classes.

c. The start time finish time and any penalty which will be applied for late finishing.

d. any start order and the method arrived at for employing it.

e. the values of each point visited or any formula which is used to calculate the value of each point visited. In addition there may also be **Special Tasks** at certain locations which are worth extra points. These may take the form of driving mental or physical tasks these may involve the use of the competing **Vehicle** or alternatively a **Vehicle** may be provided for the task. Each task will be overseen by a **Marshal** who will issue instructions and record the score.

f. the number of **Special Tasks** available on the day and their maximum scoring potential.

22.5. **Special Tasks** may be timed to an accuracy of one second.

22.6. Where a winch cable or rope may be deployed the area of that section shall be no less than the length of the outstretched winch cable of rope and only **Competitors** attempting the section and the observing official may be present in the **Section**. Where **Official Documents** require all **Competitors** to use synthetic winch

rope the width of this area may be reduced.

22.7. Winch cable and rope must be presented in a serviceable condition.

23. Cross Country Driving Tests

23.1. These **Events** must be organised in accordance with App.4 Arts.3 and the following:

24. Driving Test Layouts

24.1. **Vehicles** must not be allowed to travel more than 25m (between manoeuvres) without having to stop astride a penalty line reverse or drive clear of the line or manoeuvre in a garage or box.

24.2. **Competitors** must either stop astride a penalty line or make a change of direction of at least 90° at a distance of not more than 20m before the **Finish Line**.

24.3. The route must be made available to all **Drivers** before any **Test.**

24.4. The **Start** and **Finish** of all **Tests** must be in a forward direction.

24.5. All **Tests** must be arranged so that the whole of the **Course** is visible to the **Driver** from the **Start Line** unless **Competitors** are given the opportunity to walk the **Course** beforehand.

24.6. There must be no optional direction of travel except as specified in App.9 Art.12.8.

24.7. Clarification of where and how a change of direction may be made without incurring a penalty must be available on request to all **Competitors** before the start of any **Test.**

24.8. Spin turns are not permitted.

24.9. Practising for tests is not permitted.

24.10. Markers should be not less than 1m in height unless the **Official Documents** or test instructions specify otherwise.

24.11. Lines and gates must have a minimum width of 3.5m.

24.12. Any ‘garage’ must have a minimum length of 6m and a minimum width of 3.5m.

24.13. When **Competitors** are required to perform a 180° turn in a box the size of the box must be sufficient to contain a circle of 16m diameter.

24.14. Each test should be designed so that a **Competitor** is not expected to engage reverse gear more than four times (ignoring manoeuvres to correct mistakes).

24.15. Each test must be run at least twice.

24.16. Each **Competitor**’s worst performance at each test will be discarded in arriving at total penalties for the **Event**.

CHAPTER 20 CROSS COUNTRY

Appendix 6 - Competitors Regulations – All Events

1. General

1.1. Any **Competition Licence** holder who permits the unauthorised presence at any time of any **Vehicle** on a known or former **Cross Country Course**, a **Special Stage** or on private property including land owned or managed by the **Defence Infrastructure Organisation, Natural Resources Wales, Forestry and Land Scotland, the Forestry England** or **DAERA Forest Service NI** will be **Disqualified** from any related **Event** and may be referred to the **ASN National Court.**

1.2. No verbal instruction to **Competitors** regarding routes time schedules layouts or performance in a **Stage** or **Test** or section issued during an **Event** will be valid.

1.3. Any instruction relating to these matters must be displayed as an official notice at least 30 minutes before the first **Vehicle** is due to start a **Competition** or issued in writing to each **Competitor** who must acknowledge receipt by signing an appropriate form provided by the **Organiser.**

1.4. At the start each **Competitor, Passenger** and **Vehicle** will be checked for eligibility.

1.5. Any **Competitor** not reporting as instructed may be fined **Disqualified** or may forfeit their starting position.

1.6. **Drivers** and **Passengers** must produce a valid **Club Membership Card** and **Competition Licence** as detailed in **Ch.6.**

1.7. For any **Cross Country Event** where crash helmets are required and irrespective of licence grade **Drivers, Navigators** and **Passengers** who have any notifiable condition referred to in **Ch.6 App.2 Art.6.6** may not apply for their **Competition Licence** on the day and should allow a calendar month for their application to be assessed and processed by the **ASN.**

1.8. **Drivers** at **Hill Rallies, Competitive Safaris, Team Recovery, Point to Point, Challenge Events** and all **Events** crossing a **Public Highway** must hold a current valid **RTA Licence** appropriate to the **Vehicle**.

1.9. **Drivers** at **Trials, Winch Recovery, Gymkhanas, Treasure Hunts** and **Orienteering** must also hold a current valid **RTA Licence** appropriate to the **Vehicle** but the **Official Documents** can permit entries from

a. **Drivers** who are 16 or over but who do not have a current valid **RTA Licence** for the **Vehicle** provided their **Passenger** holds such a licence and is experienced in **Cross Country Trials.**

b. Drivers aged 15 or over where:

i. The Competitor has finished four Tyro Trials and the **Vehicle** is road legal, or

ii. Where the driver has finished a further four Cross Country Trials in a road legal vehicle and the Vehicle is a special Vehicle as defined by **App.8 Art.5.5**.

c. Proof of finishing may be recorded on the **Licence Upgrade Card** or other suitable means.

1.10. **Drivers** at **Timed Trials** must hold a current valid **RTA Licence** appropriate to the **Vehicle** exceptionally the **Official Documents** may permit **Drivers** aged 16 or over who do not hold a current valid **RTA Licence** appropriate to the **Vehicle** where the **Competitor** has finished four **Cross Country Trials.**

1.11. The **Vehicle** may only be driven between observed sections by a **Crew** member holding a valid full **RTA Licence**. For **Tyro** and **Junior Trials** see **Arts.2.14 - 2.16** and **App.8 Art.5** (**Tyro Trial**) and **App.8 Art.6** (**Junior Trials**).

1.12. At **Hill Rallies** both the **Driver** and **Co-Driver** or **Navigator** must produce a valid **Competition Licence** for those **Rallies** specified in the current chart of Minimum Acceptable **Licences** as requiring a **Competition Licence**.

1.13. Upgrading of **Competition Licences** is provided in **Ch.6 App.8 Art.2**.

1.14. **Vehicles** competing in **Cross Country Events** must comply with **Technical Regulations** App.10 and Ch.7 as appropriate.

1.15. **Vehicles** may be divided into **Classes** as specified by the **Official Documents.**

2. The Crew

2.1. For **Hill Rallies** and **Competitive Safaris** all **Competitor**s must wear approved crash helmets in accordance with Ch.9 and **FIA** approved FHRs and clothing which covers the arms legs and torso up to the neck and unless a laminated glass windscreen or minimum thickness 4mm plastic windscreen is fitted the **Crew** must wear goggles or visors to protect the eyes.

2.2. For **Timed Trials Team Recoveries** and **Point to Point** all **Competitor**s must wear approved crash helmets in accordance with Ch.9 and clothing which covers the arms legs and torso up to the neck and unless a laminated glass windscreen or minimum thickness 4mm plastic windscreen is fitted the **Crew** must wear goggles or visors to protect the eyes.

2.3. In addition **Competitors** in **Sports Utility Task Vehicles** must wear an **FIA** approved FHR device fitted in accordance with **FIA** regulations.

2.4. Wearing of flame-resistant clothing and gloves is strongly recommended for all **Events** including untimed **Events.**

2.5. The **Official Documents** may require crash helmets to be worn in untimed **Events.**

2.6. Seat belts must be worn on all timed Events except Team and Winch Recovery and are strongly recommended at all Events.

2.7. Any means of identification fixed for the **Competition** must be removed when a **Competitor** retires or is **Disqualified** from or completes the **Event.**

2.8. **Vehicle Competition Numbers** must be displayed as required by these **Regulations.**

2.9. The same **Driver** must drive throughout a **Competition** and except with official approval the people carried at the start of an **Event** must not change during the **Event.**

2.10. Only the nominated **Driver** and / or **Co-Driver** listed on the **Entry** form can drive during a **Competition** unless the **Official Documents** specify otherwise.

2.11. No person under 16 years of age can be carried in an open **Vehicle** during an **Event** and no one is permitted to ride other than in a proper seat.

2.12. No **Driver** may drive for more than 200 miles without rest or relief either by halting the **Vehicles** for at least one hour or by a change of **Drivers.**

2.13. No competing **Vehicle** may carry more than one physically disabled person whose participation must be authorised in accordance with Ch.6 App.2 Art.9.

2.14. The minimum age for taking part in a **Junior Trial** is 8 years.

2.15. **Competitor**s are not eligible for **Junior Trials** on or after their 18th birthday.

2.16. All **Competitors** must comply with Ch.6 Art.9 in respect of the counter-signatory of **Parent** or **Guardian** in respect of **Entries** and a minor **Competitor** shall not take time off from school to compete.

CHAPTER 20 CROSS COUNTRY

Appendix 7 - Competitors Regulations - All Events using the Highway and Hill Rallies

1. Route Details

Note: the limitation on maximum distances to be driven by **Competitors**

Note: Penalties are provided in App.11.

Note: *indicate matters that should be notified in the **Official Documents.**

1.1. The onus of following the correct route rests with the **Competitor** who must visit controls in the order set out in the **Road Book or Route Card** unless otherwise specified.

1.2. A **Control** is considered to extend for 50m around the actual point at which **Officials** are located unless clearly visible signs are displayed to define a different area.

1.3. The direction of approach to or departure from a **Control** can be specified.

1.4. Non-compliance with Art.1.3 above requirement by passing a **Control** travelling in the wrong direction or visiting a **Control** or check more than once may involve a **Penalty.**

1.5. No private road track can be used by **Competitors** unless specific permission is given in the **Road Book or Route Card**.

1.6. **Officials** must be on duty at all **Controls** where it has been indicated in the **Official Documents** that they will be manned. If **Officials** are not present at a **Control** during the whole period when **Competitors** are due to report all performances at that control point will be ignored in compiling the **Results.**

1.7. All performances will also be ignored if a control is not sited at the location specified in **Official Documents.**

1.8. The onus of ensuring all the information required by the **Organisers** in the **Official Documents** is clearly and legibly recorded at the appropriate time and place rests with the **Competitor.**

1.9. Should any entry on a **Time Card** not be legible or not appear authentic it may be ignored.

1.10. **Organisers** can refer to **Marshals'** check sheets in case of doubt.

1.11. If there is a discrepancy between the time allowance shown by **Organisers** on the **Time Cards** and that shown on any other document the **Time Card** will be taken to be correct unless previously amended in an **Official Bulletin.**

1.12. It is an offence for any **Competitor** to proceed or continue in an **Event** until the information required by App.2 Art.4.1 is provided.

2. Rights and Duties of the Organisers (see also Ch.3)

2.1. **Judges** may be appointed to adjudicate on:

a. Failure to stop at **Stop** or **Give Way** signs.

b. Failure to comply with the **Regulations** in respect of **Special Stages.**

c. False starts on **Stage, Test** or standard sections.

d. Unauthorised use of auxiliary lights.

e. Unauthorised possession of recorded notes or unlicensed radio equipment or intercoms or frequencies.

f. Unauthorised servicing.

g. Unauthorised smoking.

h. Excessive **Noise** (measured by meter) (see Ch.7 App.8 Art.2).

i. Violation of out of bounds areas.

j. Violation of crash helmet or seat belt regulations.

2.2. **Driving Standards Observers** (**DSOs**) (see Ch.5 Part B App.6) may be appointed to adjudicate on:

a. Excessive vehicle **Noise** (observed during the **Event**).

b. Excessive speed.

c. Driving in a manner likely to bring motor sport into disrepute.

2.3. Any **Competitor** driving at an excessive speed in a reckless manner or in a manner likely to bring motor sport into disrepute or convicted of any driving offence committed during an **Event** may be **Disqualified.**

2.4. Checks manned by **Judges of Fact** or **DSOs** need not be manned for the whole period during which **Competitors** may report and may operate on a random basis.

2.5. The **Official** in charge of any control or check may mark or withhold a **Competitor's Road Book**, **Route Card** or **Time Card** if the **Vehicle** concerned has suffered damage to its exhaust system.

2.6. *The **Organisers** may establish a **Control** at any point for the purpose of observing maintenance of a set speed time schedule or route provided that the intention to do so is stated in the **Official Documents** and **Competitors** are given all the necessary information for them to comply with the requirements which are to be observed.

2.7. After a **Competition** has started **Organisers** will not accept any claim from **Competitors** in respect of **Force Majeure** or baulking. Despite this the **Clerk of the Course** has the right to **Disqualify** any **Competitor** proven to have unreasonably baulked another.

2.8. All **Timekeepers** will be **Judges of Fact in** respect of time recorded.

3. Finish – Events Using the Public Highway

3.1. To be classified as a finisher a **Competitor** must report to at least two-thirds of the controls listed in the **Road Book or Route Card** and report to the final control within the maximum lateness specified with the car in which they started unless otherwise stated in the **Official Documents.**

3.2. **Competitors** at the conclusion of their **Competition** shall sign a declaration form to the effect that they have not been involved in any incident that may have caused damage to persons or property or alternatively give details of such incident. Failure to comply will be penalised by **Disqualification** pursuant to a **Judicial Hearing** in accordance with Ch.2 and may be reported the **ASN** for further disciplinary action.

3.3. **Competitors** who retire will be required to submit this form to the **Event Secretary** within 72 hours of the **Event.**

3.4. Failure to return this form may be penalised by a fine in accordance with Ch.1 App.2 Art.11.

4. Results – Events Using the Public Highway

4.1. **Competitors** start with zero marks and classification is based on **Competitors** who have incurred the least number of marks. **Competitors** who have incurred an equal number of marks will be classified by reference to total marks lost in accordance with the provisions for target timing or schedules timing as applicable in this Appendix.

4.2. In the event of a tie the **Competitor** who has completed the greater portion of the **Competition** from the **Start** (including any tests) without **Penalty** will win.

4.3. If both incurred a **Penalty** at the same point the **Competitor** with the lesser **Penalty** will be the winner unless another method of resolving ties is specified in the **Official Documents.**

4.4. Damage in relation to Chart 3.r or Chart 4.t as provided by App.11 will be considered as being any tear or any indentation exceeding two inches in depth occurring to the external surfaces of the coachwork or accessories (excluding wind-screen windows lamps and bumpers) above the horizontal plane of the road **Wheel** centre.

5. Timing – Events Using the Public Highway

5.1. A **Competition** must be timed by one of the following methods which must be stated in the **Official Documents:**

a. **Target Timing** (Art.5 and App.11 Chart 3)

b. **Schedule Timing** (Art.6 and App.11 Chart 4)

***Target Timing Definitions**

Additional information must be provided in the **Official Documents.**

5.2. **Target Time** is the time specified to cover the distance between two consecutive controls.

5.3. A **Competitor** can calculate their **Due Time of Arrival** at any **Time Control** by adding the **Target Time** for the section to their actual time of departure from the preceding **Time Control.**

5.4. When **Target Time** is used each period of time must be treated individually and no penalties incurred will apply to any subsequent section.

5.5. Lateness taken over **Target Time** on **Road Sections** and **Special Stages** is cumulative and cannot be reduced.

5.6. *Bogey Time* is the time specified for a **Competitor** to complete a **Special Stage** without incurring **Penalty** and must comply with the requirement for **Special Stages** at App.3 and the average speed requirements of **Timed Events** at App.5 Art.3.1.

5.7. *Stage Maximum Time* is the maximum time penalty that can be applied on a **Special Stage** and will be the **Target Time** for the **Special Stage**. It must be stated on the **Time Card.**

5.8. *Cumulative Lateness* is the sum of times in excess of **Target Time** taken over each section and once lost cannot be regained.

5.9. *Maximum Permitted Lateness* is the amount of cumulative lateness which if exceeded from the previous **Main Control** will result in the **Competitor** being deemed to have retired.

5.10. This amount will be 30 minutes (unless the **Official Documents** specify a different period).

5.11. **Penalty**-*Free Cumulative Lateness*: the **Official Documents** must specify the amount of cumulative lateness allowed free of **Penalty** before a **Competitor** is penalised.

5.12. *Dead Time* is that authorised between booking in at the end of one **Target Timed** section and the commencement of the next section where that time is spent entirely within a control zone.

5.13. Dead time has no effect on penalties or cumulative lateness incurred elsewhere.

5.14. **Delay Allowance** is a **Penalty**-free allowance granted by an authorised **Official** to specific **Competitors** following a delay and extends the **Target Time** for those **Competitors** on that section only.

5.15. Any delay allowance must be recorded in writing on a **Competitor's Time Card** by the **Official.**

5.16. *A Main* **Control** is situated at the **Start** and **Finish** of a **Rally** immediately before and after any **Rest Halt** and at any other specified point.

5.17. At a **Main Control** after a **Rest Halt Competitors** will (unless the **Official Documents** specify otherwise) restart at one-minute intervals.

5.18. They do so by one of the following methods which must be specified in an **Official Instruction:**

a. In number order

b. In the order of their arrival at the **Main Control** preceding the **Rest Halt**

c. In the order of their arrival at some other preceding **Control** or

d. In the order of **General Classification** at a specified point if interim results are available.

5.19. Each **Competitor** must be given a due starting time from any **Main Control** (Out) and any difference

between this time and the **Competitor**'s actual starting time will be counted towards cumulative lateness and a **Time Penalty** applied (unless the **Official Documents** specify otherwise).

5.20. *Re-grouping **Controls***: the **Road Book or Route Card** can specify any controls that relate to **Competitors** who are considered to have retired through having accumulated more than the maximum permitted lateness at a **Control.**

5.21. These **Competitors** commence the next section with zero lateness towards **Disqualification**.

5.22. In a **Special Stage** *Arrival* **Control** a **Competitor** proceeds to the **Special Stage Start** immediately after checking in to the **Special Stage Arrival Control**. The area between **the Special Stage Arrival Control** and the **Stage Start** must be **Parc Fermé.**

5.23. Similarly in a **Special Stage Finish Control** a **Competitor** receives a **Special Stage Finish Time** in hours minutes and seconds at the **Special Stage Finish Control.** This time (in hours and minutes) is used as the start time for the next section (unless the **Official Documents** specify otherwise).

5.24. **Competitors** will receive penalties on **Special Stages** as follows (unless the **Official Documents** specify otherwise):

a. Under Bogey = Bogey Time

b. Over Bogey under Target = Actual Time taken

c. Over Target = **Target Time.**

6. Scheduled Timing Definitions

6.1. *Standard Time* is the time of day a notional **Competitor** number zero would be due at any **Control** or check.

6.2. *Scheduled Time* is the actual time each **Competitor** is required to be at any specific point and can be calculated for any point by adding that **Competitor's Competition Number** multiplied by the time interval between **Competitors** at the **Start** to the standard time at that point.

6.3. **Delay Allowance** is a **Penalty**-free allowance granted by an authorised **Official** to specific **Competitors** following a delay and it must be recorded in writing on the **Competitor's Time Card** by the **Official.**

6.4. *Due Time* is the time a **Competitor** is due at any control or check inclusive of any previous lateness.

6.5. *Penalised Time* is the difference between Due Time and an earlier or later arrival time.

6.6. **Penalty** *Free Lateness* allows a **Competitor** late at one **Control** to be an equivalent amount late at the next control without incurring further **Penalty.**

6.7. *Maximum Time* is the latest time a **Competitor** can arrive at a control or check without incurring further **Penalty.**

6.8. *Outside Total Lateness (OTL)* is the point where a **Competitor** is considered not to have visited the **Control** or check by virtue of the fact that they are more than 30 minutes past their **Scheduled Time** (including any delay allowance). It is permitted for the **Official Documents** to specify a different period.

6.9. **Organisers** may require any **Competitor** who is late to reduce their lateness by either foregoing or reducing any period provided for remaining at a **Control** or official **Halt.**

6.10. **Competitors** may themselves reduce lateness without **Penalty** in the following ways (providing the **Section** is not defined as **Neutral** and unless forbidden to do so by the **Official Documents** or by breaching **Art.6.17 below:**

a. When **Target Times** are used by traversing the distance between any two or more points in a time less than the **Target Time** so long as they do not report at a control or check before the original **Scheduled Time.**

b. By reporting at any **Control** or check following one at which a **Penalty** was applied for lateness at any time not earlier than **Scheduled Time.**

c. A **Competitor** on any **Rally** without **Special Stages** who wishes may miss a **Control** or **Controls.**

They will be penalised in accordance with App.11 Chart 3.a or 4.a for every **Control** missed. If they rejoin the route at a control at the end of **Standard Section** they will be permitted to restart without further **Penalty** at any time between their original **Scheduled Time** and their **Maximum Permitted Lateness** in relation to their original **Scheduled Time**. If rejoining **Control** at the end of a **Neutral Section** they will only be permitted to restart without further **Penalty** at their official **Corrected Time** based on the time of arrival at the last **Control** at which they reported.

6.11. If the need arises for an **Organiser** to extend **Maximum Permitted Lateness** this can only be done at a point on the route at which **Competitors** are required to report to avoid **Disqualification**.

6.12. **Maximum Permitted Lateness** can then only be extended for the following part of the route and cannot be applied retrospectively for earlier sections.

6.13. These provisions are subject to **Standard Condition 4 of the Motor Vehicles (Competitions and Trials)** Regulations where they apply.

6.14. No **Penalty** free lateness or official delay allowance which has been either reduced or foregone as permitted by Arts.6.10 and 6.11 above can be reclaimed.

6.15. This does not exclude fresh claims based on new circumstances.

6.16. A **Competitor** found to have traversed a distance greater than four miles between two consecutive time **Controls** in less than three-quarters of the time specified by the official time schedule will be penalised in accordance with Art.6.10 above unless competing on a **Special Stage**. In calculating such a penalty any fraction of a minute will be ignored. Thus:

a. In a nine minute section a penalty is imposed if a **Competitor** completes the section in less than six minutes.

b. In a 10 minute section – seven minutes.

c. In an 11 minute section – eight minutes.

d. In a 12 minute section – nine minutes.

6.17. Any timing to less than one minute will be recorded on equipment as detailed in the **Timekeeping Regulations** at App.2 Art.8.

6.18. **Competitors** will be timed by the official timepieces in the charge of **Officials** unless the **Official Documents** state that watches carried by the **Competitors** can be used.

6.19. *If **Competitor**'s own watches are used they must be of a size and type to enable the dial to be read and must be sealed.

6.20. The requirements for sealing watches must be stated in the **Official Documents.**

6.21. The promoters may reject any watch which cannot be satisfactorily sealed or read. If any sealed watch varies from official time by more than one minute the **Competitor** concerned will be timed by official clocks from then unless the **Official Documents** make provision for the replacement or re-setting of the watch concerned.

7. Controls – All Events using the Public Highway and Hill Rallies

7.1. **Controls,** checks and test sites must open 30 minutes before the due time of arrival of the first **Vehicle** and close 30 minutes after the due time of arrival of the last **Vehicle** unless the **Official Documents** specify otherwise.

7.2. The time of arrival at or departure from a **Control** other than intermediate and final controls of Regularity Sections (where Arts.6.10 and 6.11 **apply**) will be the time at which the **Road Book** or **Time Card** is presented by the **Competitor** concerned providing all **Crew** members and the **Vehicle** are within the **Control** area.

7.3. Exceptions to this are:

a. In the **Event** of a competing car obstructing other **Competitors** through being halted or unduly slow near a control Officials may instruct the **Driver** to proceed and may then record the time as the time when this instruction is given.

b. In the **Event** of a **Competitor** presenting a **Time Card** to Officials at a time when the car is outside the control area the Officials may or may not make a record on the **Time Card** at their discretion.

c. At **Special Stage** Arrival Controls no penalty will be incurred if the car enters the control area as follows:

i. On a **Target Timed Event** the **Vehicle** may enter during the sixty seconds immediately preceding the target check-in minute or during the check-in minute. (For example: a **Vehicle** has left the previous **Stage Finish** at 11.04.40 on a section for which the **Target Time** is nine minutes. It is therefore due at the next **Time Control** at 11.13. The **Vehicle** arrives at the yellow advance **Control Board** at 11.08 stopping before the yellow board. The **Vehicle** is permitted to enter the control zone at any time after 11.12.00. The **Time Card** may be handed in at any time between 11.13.00 and 11.13.59 and a time of 11.13 will be recorded. This procedure will incur no **Penalty.)**

ii. On a **Scheduled Time Event** the **Vehicle** may enter the **Control** zone during the sixty seconds immediately preceding the due time minute or during the due time minute. The procedure to be followed is identical to that for a **Target Timed Event** from the point of arrival at the yellow control board to the actual check in time.

7.4. The responsibility of establishing the correct **Due Time** rests solely with the **Competitor** as does the onus of presenting the **Time Card.**

7.5. The time of reporting at **Controls** will be recorded to the preceding whole minute when penalties are imposed per minute (eg 09 minutes 59 seconds will be recorded as 09 minutes).

7.6. When a **Penalty** is imposed for a timekeeping error of less than one minute the time will be recorded to the preceding second.

7.7. Where a **Control** at the end of a section timed to the second also forms the start of a section timed to the minute the time of departure will be considered as being the same as arrival but ignoring any seconds.

8. <u>All Events except Hill Rallies Using the Public Highway</u>

8.1. **Competitors** must not carry any form of Intercom (ie any method of voice amplification) or any radio transmitting device. Penalties are specified in **App.11 Chart 3.s** or **4.s.**

8.2. Exceptionally mobile telephones are permitted if the **Official Documents** specifically allow them.

8.3. No regular assistance organised in advance may be used by **Competitors**.

8.4. **Competitors** must stop before entering any road protected by a **Stop** or **Give Way** sign. Failure to do so will be penalised by **Disqualification** following a **Judicial Hearing** in accordance with **Ch.2**.

8.5. Exceptionally with the specific permission of the **RLO Give Way** signs in **Quiet Zones** may be negotiated in accordance with the **Highway Code.**

8.6. Any such junctions must be advised to **Competitors** in advance.

8.7. Only 1:50000 scale OS maps may be used. The only information which can be added to these maps as sold is:

a. Highlighting numbers words and legends printed on the map within the outer printed grid numbers.

b. Highlighting and repeating grid lines and numbers and marking adjacent map numbers outside the area defined above.

c. Including information provided by the **Event** Organisers.

8.8. If required by the **Organisers Rally** plates must be displayed at the rear of the **Vehicle** and on or just below the rear side window.

8.9. **Competitors** are strongly recommended to carry a **First Aid Kit.**

9. Regularity Sections

9.1. Timing will be at the moment of entering the control area. The **Official Documents** will specify:

a. Whether **Competitors** need to stop and present **Time Cards** at intermediate controls.

b. *The penalties for stopping within sight of any **Control.**

c. *The penalties for early or late arrival at any **Control** on a **Regularity Section.**

10. Route Checks

10.1. These unmanned checks prove a **Competitor**'s stays on the correct route.

10.2. Proof of passage will involves recording the symbols from a **Code Board** which must be placed facing oncoming **Rally Vehicles.**

10.3. The **Code Board** will at least 315 sq cm and show a maximum five black numbers or letters (or a combination of both up to a maximum of seven) on a contrasting background.

10.4. The letters/numbers must be at least three inches high (7.63 cm) with a minimum of 1/2 inch (1.27 cm) stroke width.

11. Passage Controls

11.1. **Manned Passage Controls** also prove a **Competitor**'s adherence to the correct route.

11.2. **Passage Controls** cannot be located less than 500m from any other manned **Control.**

11.3. The only requirement for a **Competitor** is to have the **Marshal's** signature recorded.

12. Time Controls

12.1. **Time Controls** are manned points established to record the time of a **Competitor** who must come to a stop for the purpose.

12.2. It can additionally record the direction of the **Competitor**'s approach and departure.

12.3. The only other information permitted to be recorded by the **Marshal** is the authentication of the records held by the **Competitor**.

12.4. These records to be valid must be signed by the **Marshal** with the **Competitor** not being required to make any entry on the **Time Card.**

12.5. An example of all official boards must be on display at documentation for the **Event.**

CHAPTER 20 CROSS COUNTRY

Appendix 8 - Competitors Regulations – Trials and Un-timed Events

Note: *indicated matters to be included in the **Official Documents.**

1. Cross Country Vehicle Trial

1.1. These **Events** must be organised in accordance with App.6 and App.7 as appropriate.

1.2. *The **Official Documents** may allow the **Vehicle Crew** to be varied during the **Event** and may specify the minimum tyre pressure permitted for the **Competition.**

1.3. Only one **Passenger** aged 16 or over may be carried on a **Vehicle** during **Observed Sections.**

1.4. Exceptionally the **Official Documents** may reduce this minimum age to 14 providing the **Vehicle** is fitted with seat belts and either a manufacturer's hard top, a truck cab, or a rollbar, or where the **Vehicle** is a road legal, mass produced, production **Vehicle** retaining the original hardtop or truck cab and where the seat belts comply with Ch.7 App.7 Art.6 the **Official Documents** may further reduce the minimum age of the **Passenger** to 12.

1.5. The **Passenger** must remain properly seated alongside the **Driver** throughout all **Observed Sections.**

1.6. 'Bouncing' will be permitted only within the confines of the seating compartment, and then only so long as no portion of either the **Driver's** or **Passenger's** body (other than arms and hands) is placed outside the sides of the **Vehicle** or behind the seat they are occupying.

2. Numbers

2.1. Numbers will be allotted by ballot.

2.2. Numbered **Results Cards** will be issued at the **Start** and must be presented by the **Crew** to **Officials.**

2.3. **Competition Numbers** must be displayed on both sides of all competing **Vehicles**, except for **Trials** when the **Official Documents** may relax this requirement.

2.4. **Competitors** will start in numerical order and the **Organisers** shall determine the order of running at each **Observed Section.**

2.5. **Competition Numbers** or **Number Cards** must be removed at the **Finish** or if a **Competitor** retires.

3. Observed Sections and Route

3.1. The onus of following the correct route rests with the **Competitor**.

3.2. Any signs displayed other than in an Observed Section are designed to assist **Competitors** and have no mandatory authority unless the **Official Documents** specify otherwise.

3.3. **Competitors** will drive from point to point with as little delay as possible and any **Competitor** suspected of loitering can be ordered to proceed by an **Official.**

3.4. **Competitors** arriving at an **Observed Section** more than 20 minutes after the preceding **Competitor** may be refused permission to attempt that section.

3.5. ***Competitors** should attempt to negotiate **Observed Sections** without stopping.

3.6. **Organisers** may, however, allow certain **Vehicles** by virtue of their size to take a specified number of changes of direction on any particular section.

3.7. The permission to change direction and the eligibility of **Vehicles** to do so must be specified in the **Official Documents** or **Final Instructions** (see App.11 Chart 5).

3.8. Failure of a **Vehicle** to maintain unassisted forward motion in the direction of the **Course** will be regarded as failure to comply with the requirements to proceed non-stop unless the **Judges** are satisfied that a permitted change of direction is intended or the **Organisers** have ruled that more than one attempt may be made.

3.9. The point of failure will be at a vertical line from the centre of the hub of the front **Wheel** which is the farther from the start of the section.

3.10. The beginning of any **Observed Section** will be marked by signs and its boundaries by markers or natural obstacles.

3.11. Natural obstacles must not be used as penalty markers.

3.12. Before attempting an **Observed Section** a **Vehicle** must be brought to rest with a leading **Wheel** hub centre vertically over the **Start Line** as indicated by **Officials.**

3.13. The **Driver** must not proceed until instructed to do so.

3.14. If an **Observed Section** is divided into **Sub-Sections** signs must indicate the beginning and end of each **Sub-Section.**

3.15. A **Vehicle** will be considered to have entered an **Observed Section** or **Sub-Section** when the leading wheel hub centre has passed the marker(s) indicating the beginning of the section.

3.16. A **Vehicle** will be considered to have left an **Observed Section** or **Sub-Section** when the leading **Wheel** hub centre is past the marker(s) indicating the end of the section, provided that no prior penalties have been incurred.

3.17. *Failure in a lower or earlier **Sub-Section** will constitute failure in all succeeding **Sub-Sections.**

3.18. The **Start Line** will indicate the greatest penalty and the **Finish Line** the zero **Penalty**. The **Official Documents** will specify the methods of scoring and application of penalties.

3.19. A **Competitor** will be deemed to have failed to negotiate an **Observed Section** non-stop if:

a. Any part of the **Vehicle** touches a penalty marker, and / or

b. All **Wheels** cross the boundary of the **Course** as defined by the **Clerk of the Course.**

3.20. The point of failure will be deemed to be that at which the first penalty marker is touched or the point at which the **Course** boundary is first crossed by all **Wheels** of the **Competition Vehicle**.

3.21. Should this point of failure coincide with the division between two **Sub- Sections** the marks lost will be those on the **Sub-Section** recording the greater penalty.

3.22. Performances on any **Observed Section** may be ignored at the **Organisers'** discretion even though there have been successful attempts to negotiate the section.

3.23. If this discretion is exercised no performance on the section in question must be taken into account when compiling the results.

3.24. No unauthorised assistance is allowed and **Vehicles** must complete the **Course** under their own power. No case of **Force Majeure** will be taken into consideration.

3.25. At the **Organisers'** discretion a minority of the **Observed Sections** may be timed if provided for in the **Official Documents**. The following conditions will apply:

3.26. Only those sections which the Organisers anticipate will be completed without penalty by the majority of **Competitors** may be timed.

a. Any such timed section must be less that 200m long.

b. No **Sub-Sections** of an arduous or demanding nature can be used.

c. The maximum time allowed for each timed section must be stated in the **Official Instructions** prior to the commencement of the test.

d. The maximum time allowed for each timed section must not require any **Competitor** to exceed 15mph or 30 seconds per 200m.

4. Results – Trials

4.1. Any penalties incurred on a timed section must be calculated by reference to the following formulae unless the **Official Documents** specify otherwise.

a. For failing to proceed non-stop. Where the failure will decrease in proportion to the number of Sub-Sections negotiated non-stop = 12*.

i. *Plus the highest penalty incurred by any Competitor making an attempt correctly.

b. For successfully negotiating the section within the time allowed = 0.

c. For negotiating the section non-stop in excess of the time allowed the following formula is used:

$$\left(\frac{\text{Time taken x 100}}{\text{Time allowed}}\right) - 100$$

	Penalty points		Penalty points
0.0 – 8.3 1	1	50.1 – 58.3	7
8.4 – 16.6	2	58.4 – 66.6	8
16.7 – 25.0	3	66.7 – 75.0	9
25.1 – 33.2	4	75.1 – 83.3	10
33.3 – 41.6	5	83.4 – 91.6	11
41.7 – 50.0	6	91.7 – 100.0	12
		100.0 & above	12

4.2. **Competitors** will start with zero marks. To be classified as a finisher, a **Competitor** must have attempted at least three quarters of the total number of **Observed Sections** and arrive at the **Finish** within 20 minutes of the preceding **Vehicle**.

4.3. The **Competitor** incurring the lowest marks will be the winner, and so on.

4.4. Ties will be resolved at the **Organisers**' discretion, unless the **Official Documents** state otherwise.

4.5. Each **Competitor** will be provided with a **Results Card** which must be produced on demand for **Officials** to mark at each section unless the **Official Documents** specify an alternative method.

4.6. Penalty marks will be incurred as follows unless the Marks Lost indicated below are modified by the **Official Documents**:

Penalty	Marks Lost
Each minute late reporting at the Start or a re-Start	5
Failure in an Observed Section (where an **Observed Section** is divided into **Sub-Sections** the **Penalty** for failure will decrease in proportion to the number of **Sub-Sections** negotiated non-stop).	12
Not attempting or being ready to attempt an **Observed Section** or **Sub-Section** when instructed to do so	12*
Not complying with a reasonable instruction by an **Official** for which a **Penalty** is not otherwise stipulated and provided warning of **Penalty** is given	12*
Driver and / or **Passenger** not seated in accordance with **Regulations**	12
Running with tyre pressures lower than that required by the **Official Documents**	50

***Plus the lowest total penalty incurred by any **Competitor** making an attempt correctly.

5. Tyro Trial

5.1. **Tyro Trial Drivers** must hold a valid full RTA licence for **Vehicles** with more than three wheels and produce a valid **Club** membership card.

5.2. The **Official Documents** may permit entries from **Drivers** who are 13 or over without a full RTA **Licence**,

provided that their **Passenger** has experience of **Cross Country Trials** and holds a full RTA **Licence** for the **Vehicle** entered.

5.3. The **Vehicle** may only be driven between observed sections by a **Crew** member who holds a valid full RTA **Licence**.

5.4. **Vehicles** not complying with **App.10 Art.21** must be fitted with a standard manufacturer's hardtop, truck cab or a roll bar to **Ch.7 App.13 Diagram 10, Ch.7 App.7 Art.6** (three point harness), **Ch.7 App.5 Art.5** (external circuit breaker) and the **Official Documents** may permit entries to be accepted in respect of **Drivers** who are 13 or over without a full RTA licence provided that the **Passenger** holds a full RTA licence valid for the **Vehicle** concerned and is a person who has experience of **Cross Country Trials.** Where the **Driver** holds a full RTA licence the minimum age of the front seat **Passenger** is 12 years of age.

5.5. More than one **Passenger** may be carried where the **Driver** holds a valid full RTA **Licence**.

5.6. **Passengers** under the age of 18 will not be considered as **Competitors** for the purpose of **Club** membership.

5.7. **Passengers** aged between 2 and 12 years old will be signed on by their parent or guardian.

5.8. All **Passengers** must be properly seated with their seat back in an upright position and the seat adequately fixed.

5.9. All occupants must wear an approved seat belt at all times and all **Passengers** must be seated in forward facing seats. Their seat back must be upright and they must face forwards.

5.10. The **Passenger** sitting alongside the **Driver** during sections must be at least 12 years.

5.11. **Passengers** who occupy the rear seats of the **Vehicle** must not be less than 2 years of age any child under 12 years of age or 135cm in height must be seated using an approved 'child restraint'.

6. Junior Trial

6.1. **Junior Trials** must be organised in accordance with **App.6**, **App.7 Arts.1–7** and **Arts.3** and **4 of this Appendix.**

6.2. At all times during a **Junior Trials Event Vehicles** may only be driven under the instruction of an **Official.**

6.3. There are three **Classes** of **Trial:** Novice, Intermediate and Expert.

6.4. **Competitors** must finish four **Novice Junior Trials** before being eligible for **Intermediate Junior Trials**, and four **Intermediate Junior Trials** before entering **Expert Junior Trials**.

6.5. Proof of finishing a **Junior Trial** will be by the signing of a **Competitor's Competition Licence** by **the Clerk of the Course.**

6.6. Sections for the different **Classes** may either be set out separately or so that a section increases in severity with separate finishing points for the respective **Classes.**

6.7. Fiddle brakes may only be used by **Competitors** in the **Expert Class**. If fitted to **Vehicles** entered in **Novice** or **Intermediate Classes** they must be rendered inoperative.

7. Winch Recovery

7.1. The following regulations are additional to and take precedence over **App.6,** and **App.7 Arts.1 - 7.**

7.2. Details of the **Course**, the manner of recovery, the maximum time for completion and the method of starting will be given at the **Start.**

7.3. **Competitors** will be allowed to examine the **Course** prior to the **Start.**

7.4. *The **Official Documents** will specify the number of **Vehicles** and members in a team.

7.5. No more than three members will be allowed in each team which must nominate a **Captain** to be responsible for keeping any score-card issued and represent the team to the **Clerk of the Course.**

7.6. *At the **Start** and **Finish**, all team members must be correctly seated in their **Vehicle** and all equipment must be in or on the **Vehicle**.

7.7. Each team will be allowed a minimum of two attempts at the **Course.**

7.8. The team completing the course with the least penalties as stated in the **Official Documents** will be the winner.

7.9. The **Clerk of the Course** may penalise or stop a team if it is considered their mode of recovery is likely to be dangerous to **Officials**, **Competitors**, spectators or natural terrain.

7.10. The **Clerk** can also award penalties for touching gates.

7.11. Once a winch **Vehicle** and anchor **Vehicle** have been manoeuvred into position they must remain stationary whilst winching.

7.12. Natural anchorage points may be used but must be protected from damage.

7.13. It is strongly recommended that all members of the team wear protective clothing during winching operations, ie overalls, gloves, eye protectors.

7.14. It is strongly recommended that **Competitors** other than the winch operator should also wear a crash helmet to **ASN** specification.

7.15. All equipment, including cables, ropes, straps or webbing, shackles, blocks, hooks, ground anchors, winches, etc and **Vehicles** must be presented to and approved by the **Scrutineer** prior to an **Event.**

7.16. The **Organisers** may supply certain equipment.

8. Promotional Events

8.1. **Drivers** must hold a valid full **RTA Licence** in respect of **Vehicles** having more than three **Wheels.**

8.2. The **Official Documents** may permit entries from **Drivers** who are at least 16 without a full **RTA Licence**, provided the **Passenger** holds a valid full **RTA Licence** and has experience in **Cross Country Trials.**

8.3. The **Vehicle** may only be driven between **Observed Sections** by a **Crew** member who holds a valid full **RTA Licence.**

8.4. All **Drivers** must produce a valid **Club** membership card.

8.5. More than one **Passenger** may be carried where the **Driver** holds a valid full **RTA Licence.**

8.6. **Passengers** under the age of 18 will not be considered **Competitors** for the purpose of **Club** membership.

8.7. **Passengers** aged between 2 and 12 years old will be signed on by their **Parent** or **Guardian.**

8.8. All **Passengers** must be properly seated with the seat back in the upright position and with the seat adequately fixed.

8.9. All occupants must wear an approved seat belt at all times.

8.10. The **Passenger** sitting alongside the **Driver** in sections must be at least 14 years of age.

8.11. **Passengers** who occupy the rear seats of the **Vehicle** must not be less than 2 years of age, any child under 12 years of age or 135cm in height must be seated using an approved ‘child restraint’.

8.12. **Passengers** may not be carried for hire or reward.

CHAPTER 20 CROSS COUNTRY

Appendix 9 - Competitors Regulations - All Timed Events

1. Cross Country Vehicle Timed Trials

1.1. The following regulations are additional to and take precedence over App.6**,** and App.7 Arts.1 – 7 and App.8 Arts.1 – 4:

1.2. **Penalties** will be in accordance with the following:

a. For each second over the **Target Time:** 1 mark per second.

b. For failing to satisfactorily negotiate an **Observed Section** within the maximum time allowed: 1 mark per second of maximum time allowed.

1.3. The **Official Documents** may specify additional penalties based on a specified number of marks per second.

1.4. Failure of a **Vehicle** to maintain unassisted forward motion in the direction of the **Course** will not be regarded as failure to comply with the requirements to proceed non-stop.

1.5. Further attempts to regain forward motion will be permitted until the maximum time allowed for the section has elapsed.

2. Competitive Safaris

2.1. These regulations are additional to and take precedence over App.6**,** and App.7 Arts.1 – 7 and App.8 Arts.1 – 4:

2.2. *The **Official Documents** may permit two separate **Drivers** to drive one **Vehicle** under one **Entry.** In such cases their total combined penalties will be added together as if they were one **Competitor.**

2.3. **Vehicles** may carry one **Passenger,** minimum age 16, in addition to the **Driver** who must be seated in accordance with the provisions of App.8 Art.1.5.

2.4. It is recommended that **Crew** are identified by suitable means, eg a rubber stamp or a plastic wrist identity tag which must be issued at signing-on.

a. This must not be re-usable and must not cause discomfort.

b. For safety reasons it must be worn under clothing.

c. Each **Competitor** must be allowed to choose to which limb the identity mark is applied.

d. **Competitors** will be required to show the identity marking to **Officials** in the assembly area prior to the **Start Line.**

2.5. **Competition** numbers as required by these **Regulations** including Ch.7 App.10 must be displayed on both sides of each **Vehicle** either on the front doors or behind them above the **Vehicle** waistline and parallel to the **Vehicle** sides.

2.6. Where the **Official Documents** require numbers to be displayed at the front or rear of a **Vehicle** they must be a minimum 100mm in height.

2.7. **Competitors** will be advised of the minimum and maximum time allowed for the **Course**, before the **Start.**

2.8. The **Course** should have a clearly marked route so that no navigation is required and all **Course** markings should comply with the **Course** marking provisions of App.5 Art.5.

2.9. **Practice** will not be allowed over the **Course** unless the **Official Documents** state otherwise. If permitted the **Official Documents** must specify the number of **Practice** runs and the times of any **Practice** periods – see App.5 Art.4 (Course Organisation).

2.10. The **Official Documents** must also specify:

a. *The number of competitive runs.

b. *The time interval between **Vehicle**s leaving the **Start Line**, and whether the **Organisers** may hold **Competitors** en route in the event of the **Course** becoming blocked. In such instances allowance will be made for the time **Competitors** are delayed.

c. *The method by which **Competitors** are signalled to stop and whether re-runs will be permitted.

d. The starting **Signal** and method of timing to be used.

2.11. ***Competitors** will be required to proceed over the **Course** in the shortest possible time.

2.12. The **Official Documents** will specify whether **Live Recovery** will be operated by **Specialist Recovery Vehicles (SRVs)** at the Event.

2.13. These should be positioned at points where **Competitors** are likely to make involuntary stops.

2.14. The **Official Documents** will specify the maximum time allowed to **Competitors** for self-recovery, after which they must take official recovery.

2.15. No recovery operations organised by the **Competitor** in advance may be used.

2.16. At **Events** where **Live Recovery** is operated the **Clerk of the Course** must advise **Competitors** of the procedures at the **Drivers Briefing.**

2.17. The **Clerk of the Course** must specify whether the SRVs will be manned by a third **Crew** member responsible for attaching the tow rope or whether this will be carried out by the **Passenger** or **Navigator.** In the former case, **Competitors** must remain in the **Vehicle** and follow the instructions from the SRV **Crew**. In the latter case, the **Passenger** or navigator must alight from the stranded **Vehicle** and follow the following procedure:

a. They must stand clear and await instruction from the first **Crew** SRV member before attaching the tow rope between the **Vehicles.**

b. When properly attached to the towing points they must stand clear and indicate to the first SRV **Crew** member that **Live Recovery** may start.

c. Once the stranded **Vehicle** has been recovered, and only after the first SRV **Crew** member has indicated that it is safe to do they can detach the tow rope and stow it safely. They should then inform the first SRV **Crew** member that the **Course** or **Stage** can be cleared

d. The **Driver** of the recovered **Vehicle** must not proceed until the **Passenger** or **Navigator** involved is properly seated and belted in. Failure to comply will be penalised by **Disqualification.**

2.18. When arriving at a point on the **Course** or **Stage** where a **Yellow Signal** is being displayed the **Competitor** must not pass the **Yellow Signal** unless instructed to do so by a **Marshal** and will proceed with caution until clear of the incident, obstruction or stranded **Vehicle**.

2.19. Failure to comply will be penalised by **Disqualification.**

2.20. Time lost whilst **Live Recovery** of another **Competitor** is in progress will be regarded as **Force Majeure.**

2.21. Unless the **Official Documents** specify otherwise penalties will be awarded as follows:

a. For each second to complete the **Course** over minimum time allowed: 1 mark per second.

b. For exceeding the maximum time allowed: **Disqualification.**

c. For taking official recovery: 100 marks.

2.22. **Competitors** must carry an A4-size white board with a red SOS on one side and black OK on the other (letters to be a minimum of 12cm high with a minimum stroke width of 1.5cm), with means to secure them on display for oncoming **Competitors**.

2.23. In the case of an accident where urgent medical attention is required the red SOS sign should be displayed as quickly as possible to alert following **Vehicles** and aid any helicopter attempting to assist.

2.24. Any **Crew** that sees a red SOS sign displayed on a **Vehicle** or sees a major accident where both **Crew** members are inside the **Vehicle** but not displaying the SOS sign, must immediately and without exception stop to give assistance.

2.25. All following **Vehicles** must also stop and the second **Vehicle** arriving at the scene must inform the next radio point.

2.26. Subsequent **Vehicles** must leave a clear route for emergency **Vehicles**.

2.27. The **Clerk of the Course** may award a discretionary time to any **Competitor** delayed in such circumstances.

2.28. Any **Crew** which is able to but fails to comply with the rule will be reported to the **Clerk of the Course** who may impose penalties.

2.29. In the case of an accident where medical intervention is not required the OK sign must be clearly shown to following **Vehicles** and to any helicopter attempting to assist.

2.30. If the **Crew** leave the **Vehicle** the OK sign must be left clearly visible to other **Competitors**.

2.31. Any **Crew** failing to comply will be subject to a penalty at the **Clerk of the Course**'s discretion.

2.32. **Competitors** who misuse the SOS or OK signs will be penalised and may be reported to the **ASN** for further action.

2.33. Any **Crew** retiring from an **Event** must report to the **Organisers** as soon as possible except in cases of **Force Majeure.**

3. Compliance with Flags Signals

3.1. On passing a **Yellow Signal** displayed by **Marshal** wearing a high visibility tabard or vest the **Driver** MUST immediately and significantly reduce speed as well as being prepared to stop at any time; at no time must they overtake any **Vehicle** they encounter on the **Course**.

a. A **Competitor** shown the **Yellow Signal** may proceed with caution following any instructions given by the **Marshals** until clear of the cause of the caution.

b. Failure to comply with this rule will incur a penalty of **Disqualification.**

3.2. On passing a **Red Signal** displayed by a **Marshal** wearing a **Marshals'** tabard the **Driver** MUST immediately and significantly reduce speed as well as being prepared to stop at any time; at no time must they overtake any safety vehicle they encounter on the **Course.**

a. The **Driver** must then follow the instructions of any **Marshals** and / or safety personnel and maintain this reduced speed until leaving the **Course.**

b. Failure to comply with this rule will incur a penalty of **Disqualification.**

4. Hill Rallies

4.1. The following regulations are additional to and take precedence over **App.5 Arts.9 - 18** and **Appendices 6 - 8** and **Arts.1 - 3 above**.

4.2. **Trials**-type sections or **Tests** may be incorporated in **Special Stages** and should be marked in accordance with the standard procedures for **CCV Trials** or **Autotests.**

4.3. **Competitors** must be advised of the average speed which will be applied on **Special Stages.** At no time will **Competitors** be required to average in excess of 50mph.

4.4. Each **Vehicle** must carry at least one **Passenger (Navigator / Co-Driver**) as well as the **Driver.**

4.5. Servicing issues are covered in **Arts.5.12–5.24 below.**

4.6. No assistance may be expected from the **Organisers** even though they may give advice as to the source of supplies. **Competitors** are responsible for their own fuel, oil, water etc.

4.7. No **Vehicle** may be moved other than by its own power except:

a. By a ferry

b. By outside means for a minimum distance necessary to extricate it from difficulty

c. By gravity

d. By its **Crew**.

4.8. During the course of an **Event Competitors** are not permitted to use or be directly or indirectly concerned in the use of helicopters or fixed wing aircraft in the vicinity of the **Event** (whether in connection with servicing, aerial surveillance or for any other reason) without previous **ASN** authorisation in writing and in compliance with CAA regulations – see Ch.10 App.1 Art.4.9.

4.9. Before considering any such authorisation the **ASN** must be satisfied that the liabilities of all those involved in the **Event** have been covered.

4.10. Any such application must be made at least 14 days prior to an **Event.**

4.11. In accordance with CAA regulations no aircraft is allowed within 500ft of the route or within 3,000ft of any large crowd.

5. Competitors

5.1. **Competitors** and their service personnel may only use radio transceiver equipment (and frequencies) that are licensed in accordance with Ofcom Regulations.

5.2. **Competitors** must not use or carry any radio transmitting device which operates on or interferes with the **ASN Licensed Frequencies**.

5.3. Contravention of these **Regulations** will be penalised by **Disqualification** in accordance with App.11 Chart 3t and 4t.

5.4. All **Drivers'** and **Co-Drivers'** crash helmets and overalls must be produced for approval during scrutiny of a **Vehicle**.

5.5. All **Crew** members must wear a crash helmet bearing an **ASN** approval sticker (see Ch.9) and a safety belt throughout any **Special Stage.**

5.6. **Crew** members must not smoke during any **Special Stage** or **Test.**

5.7. **Drivers** must conform to the relevant **Medical Requirements** specified in Ch.6 App.2.

5.8. No person under 16 years of age may be carried during a **Rally** with **Special Stages.**

5.9. **Competitors** must comply with any instructions in the **Road Book** concerning stopping at road junctions. Failure to do so will incur penalties in accordance with App.11 Chart 3t and 4t. as applicable.

5.10. **Competition** numbers must be displayed on both sides of the **Vehicle** behind the front doors and above the **Vehicle** waistline and parallel to **Vehicle** sides.

5.11. **Rally** plates at the front and rear will display **Competition** numbers with a minimum 100mm height. On **Multi-Use Hill Rallies** these will be at the **Organiser's** option.

5.12. *Organised assistance (service) may be allowed on **Hill Rallies** if provided for in the **Official Documents** and providing the **Organisers** have made available suitable service areas and a specific time allowance for servicing.

5.13. *Organised assistance anywhere other than in permitted areas is forbidden.

5.14. Service vehicles may be required by the **Official Documents** or the **Official Instructions** to follow a prescribed route to and from service areas. In such cases all other areas are **Out of Bounds** for service **Vehicles** and their **Crew**s.

5.15. In any area where service is not allowed the presence of a service vehicle (or any vehicle from which equipment or parts are obtained) or the collection of equipment previously deposited will be considered as servicing.

5.16. These **Regulations** do not prohibit **Organisers** advising **Competitors** of any garages en route where facilities are available.

5.17. The above regulations do not prevent **Competitors** from personally making their own **Vehicle** safe to drive. **Crews** may work unassisted on their own **Vehicle** using equipment carried in their **Vehicle** in 'No Service Areas' except:

a. Within 100m of any **Control.**

b. Between a **Special Stage Arrival Control** and the **Special Stage Start Control.**

c. In any **Parc Fermé.**

5.18. The only work permitted in these areas (and it must be unassisted) is:

a. Replacing a flat tyre with a wheel and tyre carried in the competing **Vehicle.**

b. Cleaning lamp glasses, windscreens, windows, identification markings and **Vehicle** registration numbers.

5.19. Except in the areas listed above **Competitors** may work on their **Vehicle** with the assistance from other **Competitors** from any nationally recognised breakdown service and from any commercial garage not associated with the **Entrant** and not organised in advance.

5.20. Breakdown service and commercial garage vehicles will not be allowed to enter official service areas.

5.21. **Competitors** are responsible for ensuring that their service **Crews** understand and comply with these regulations and if official **Service Plates** are issued that the service vehicles at all times bear the **Official Service Plate.**

5.22. A **Competitor** may be fined or otherwise penalised by the **Clerk of the Course** if the **Crew** of any service vehicle associated with their **Entry** contravenes any regulation or **Official Instruction** or acts in a manner contrary to the interests of the **Event.**

5.23. **Competitors** may be fined, but not otherwise penalised for any breach of Road Traffic Laws by their service **Crew**s.

5.24. **Competitors** are strongly recommended to carry a **First Aid Kit.**

6. Special Stages

6.1. During any **Special Stage** or **Test** the prescribed route must be followed and any direction signs displayed are mandatory.

6.2. **Competitors** overshooting the stop line at the end of any **Special Stage** or **Test** are not allowed to reverse back to the **Control.**

6.3. **Competitors** are also not allowed to cross any part of a **Special Stage** in the opposite direction to Rally traffic.

6.4. **Competitors** must not voluntarily leave the prescribed route without the express permission of the **Stage Commander**.

6.5. Any **Competitor** who is shown a **Red Signal** on a stage where they have been notified in advance of a **Red Signal** system must cease **Competition** immediately and come to a standstill at the side of the **Course** as soon as possible.

6.6. They must not proceed until advised to do so by an **Official.**

6.7. **Competitors** may only attempt a **Special Stage** once. Re-runs are not permitted.

6.8. *Following instruction from a **Stage Start Marshal** that they are next to start on a **Special Stage**, **Competitors** abide by the following procedure:

a. The **Marshal** should give a loud verbal indication 30 seconds, 15 seconds, 10 seconds and 5 seconds before the actual start, and then countdown verbally each second 5-4-3-2- 1-GO.

b. Upon the **Signal** GO a visual starting **Signal** must be given which will normally be the raising of a flag from the bonnet (not the windscreen).

c. Any other visual **Signal** to be used must be described in the **Official Documents**.

d. Making a false start will be penalised in accordance with **App.11 Chart 3.h** and **4.h** as applicable.

e. Stages where **Competitors** are required to start at intervals of less than one minute may dispense with the 30 seconds advance warning. This revised procedure must be advised in the **Official Documents**.

6.9. Unless the **Official Documents** state otherwise the use or possession of **Pace Notes** or any other means of giving a **Competitor** advice relating to the traversing of a **Special Stage** which has not been provided by the **Organisers** is forbidden.

6.10. This does not preclude the use of Ordnance Survey maps of 1:25,000 or 1:50,000 scale in addition to others that are specified in the **Official Documents**.

6.11. The only supplementary information which may be shown on the maps is information given by the **Organisers** of the **Event** (including route details).

6.12. Contravention of **Arts.6.9–6.11 above** will be penalised by **Disqualification** in accordance with **App.11 Charts 3.t** and **4.t**.

7. Team Recovery

7.1. The following regulations are additional to and take precedence over **App.6** and **App.7 Arts.1 - 7** and **App.8 Arts. 1 - 4**.

7.2. *The **Official Documents** will specify the number of **Vehicles** comprising a team.

7.3. Teams will start in numerical order and the **Organisers** will determine the order of running at each **Observed Section.**

7.4. Details of **Observed Sections** must be given at the **Start** and unless the **Official Documents** specify otherwise, teams will have the opportunity of inspecting the **Course** before attempting each **Observed Section.**

7.5. **Team Members** may start in any order.

7.6. Each **Team** will nominate a captain who will be responsible for carrying the official score card for the team and who will produce it on demand to **Officials.**

7.7. **Team Vehicles** must not be harnessed together before the **Start.**

7.8. The onus of following the correct route will rest with the **Team Captain.**

7.9. No **Passengers** can be carried in any team **Vehicle** when it leaves the **Start.**

7.10. This does not preclude other members of the **Team** from being carried through **Observed Sections** provided that they are properly seated and are only carried for as far as is necessary and that the **Vehicle** is stationary when they mount or dismount.

7.11. Seat belts need not be worn.

7.12. Any **Team Vehicle** that cannot maintain unassisted forward motion in the direction of the **Course** must be recovered by other members of the team by pushing, towing or winching.

7.13. *All equipment to be used by **Team Vehicles** as means of self-recovery, including harness ropes and shackles, must be presented to, and cleared by, the **Scrutineer** prior to the **Start.**

7.14. This equipment must be carried on **Team Vehicles** throughout the **Competition.**

7.15. Before attempting any **Observed Section, Team Vehicle**s will be brought to rest behind the **Start Line** by **Officials** and will not proceed until instructed to do so.

7.16. *The starting **Signal** will be stated in the **Official Documents**.

7.17. A **Team** will be considered to have left an **Observed Section** when all team **Vehicles** have crossed the **Finish Line**.

7.18. Where a **Competition** involves self-recovery failure of all **Team Vehicles** to proceed whether involuntary or otherwise from the **Start Line** into an **Observed Section** when instructed to do so will be regarded as a failure in that **Section.**

7.19. Any **Team** which fails to complete a section in the stated time will have three minutes added for each **Vehicle** that has not successfully completed the section.

7.20. Unless the **Official Documents** state otherwise a **Penalty** of one minute will be added to the team time for each penalty marker touched.

7.21. The **Official Instructions** will state the maximum time allowed for each **Team** to complete each **Observed Section.**

7.22. Results will be determined with reference to the time taken including penalties for the **Team** to complete each **Observed Section.**

7.23. Further penalties may be applied if the **Official Documents** allow.

8. Point to Point

8.1. The following regulations are additional to and take precedence over App.6 and App.7 Arts.1 - 7 and App.8 Arts. 1 - 2**.**

8.2. *The **Official Documents** will specify whether the **Event** will comprise a set number of points to be visited in the shortest time or a set amount of time during which the maximum number of points are to be visited. In either case all the team must cross a **Finish Line.**

8.3. ***Competitors** will be expected to seek and visit points which may be hidden by the natural topography.

8.4. The **Official Documents** will specify:

a. If the points are to be visited at random or in a set order.

b. *If a point comprises a single marker pole with minimum height of 1m, or a gate of poles through which the direction of entry will be marked. Each point visited shall be recorded either by collecting a token or by an official marking a score card. Tokens and score cards used will be provided by the Organisers.

c. *The starting **Signal** to be used.

d. *The method of timing to be used.

e. *The maximum time allowed.

f. *The number of **Vehicles** in a **Team.**

8.5. Each **Team** must nominate a **Captain** who will be responsible for carrying the official score card or tokens for the **Team** and who will produce them to **Officials** on demand.

8.6. In addition to the **Driver, Vehicles** may carry one **Passenger** or **Navigator** who must be seated in accordance with the provisions of App.8 Art.1.5.

8.7. **Competitors** may be required to dismount at each point visited to record their visit and must fasten safety belts prior to the **Vehicle** moving off again.

8.8. No recovery assistance outside that given by a **Team** member is allowed.

8.9. **Practice** is not permitted.

9. Cross Country Orienteering

9.1. The following regulations are additional to and take precedence over App.6 and App.7 Arts.1 - 7 and App.8 Arts. 1 - 4**.**

9.2. **Competitors** are expected to drive and navigate to specific objectives.

9.3. **Official Documents** will specify equipment required to meet navigational and route restrictions.

9.4. **Competitors** will be issued with instructions before their due start time.

9.5. No time schedule will be maintained during the **Event** but the maximum time allowed will be stated in the **Official Documents**.

9.6. The method of scoring must be specified in the **Official Documents**.

9.7. Objectives must be attempted without the use of winches or other means of assistance.

10. Challenge Events

10.1. Each **Vehicle** must carry a **Driver** and either a **Co-Driver** or **Navigator (**together the '**Crew**')

10.2. **Driver** and **Co-Driver** must hold a valid RTA **Licence** appropriate to the **Vehicle** and either may drive the **Vehicle** during the **Event. Navigators** minimum age 16, do not need to hold a valid RTA **Licence** and may not drive during the **Competition**.

10.3. **Crew** members must be accommodated in securely fixed seats and wearing approved seatbelts or harnesses while the **Vehicle** is moving.

10.4. There is no compulsion to attempt to reach any point which has been set out.

10.5. There is no compulsion to attempt any **Special Task**. The **Official Documents** will specify any **Penalty** which may be applied during the **Competition** including a maximum speed limit for competing **Vehicles.**

10.6. The winner will be the **Vehicle** or **Team** which has attained the highest points score at the end of the **Competition.**

10.7. **Vehicles** must comply with the **Challenge Events Technical Regulations.**

10.8. Winches may be required primarily for the purpose of self-recovery.

10.9. All equipment to be used by the **Crew** as means of self-recovery including ropes, strops and shackles, must be presented to and passed by the **Scrutineer** prior to the **Start.**

10.10. The use of winch sails (minimum 1kg dry weight) and gloves is compulsory when winching.

10.11. When using winch cable or rope suitable gloves should be worn. Rubber and woollen gloves are not suitable.

11. Cross Country Driving Tests

11.1. **Drivers** must hold a valid full **RTA Licence** for **Vehicles** with more than three wheels and produce a valid **Club** membership card.

11.2. The **Official Documents** may permit entries from **Drivers** who are 16 or over without a full **RTA Licence**provided that their **Passenger** has experience of **Cross Country Trials** and holds a full **RTA Licence** for the **Vehicle** type entered.

11.3. The **Vehicle** may only be driven between **Driving Tests** by a **Crew** member who holds a valid full RTA **Licence.**

11.4. A **Passenger** may be carried to assist by giving directions when the driver holds a valid full **RTA Licence**.

11.5. The **Passenger** must occupy the seat alongside the **Driver** and wear a properly fastened and approved seat belt at all times during the **Test.**

11.6. No other **Passenger** is allowed.

11.7. If the **Driver** holds a valid, full **RTA Licence**, a **Passenger**, if carried, must be 12 years or over.

11.8. **Vehicles** must comply with **App.10 Art.21** and where either **Crew** member is under 16 years of age the **Vehicle** must retain the original hardtop or truck cab and the seat belts comply with the relevant provisions of **Ch.7 App.7 Art.6**.

11.9. **Classes** are free but the **Class** structure must be stated in the **Official Documents**.

12. Driving Test Procedures

12.1. **Drivers** will be considered under **Starter's** orders when instructed by an **Official** to proceed to the **Start Line.**

12.2. **Drivers** then failing to proceed may forfeit their run or may be penalised in accordance with **App.11 Chart 7.**

12.3. A **Start** will only be valid if made under the **Vehicle's** own power.

12.4. When a **Vehicle** is required to stop astride a line, the line must be between its front and back axles and all the area of the tyres in contact with the ground must be seen to have crossed the full width of the line.

12.5. Similarly if a **Vehicle** is required to cross a line with all four **Wheels** all tyre contact area must be seen to be clear of the line.

12.6. Timing at completion of a **Test** must be based on the leading **Wheel** (on the same axle) crossing the **Finish Line.**

12.7. **Penalties** will be applied for failure to cross the **Finish Line.**

12.8. In any diagram illustrating a **Test** the dimensions should be approximate and for guidance only. Indications of the direction of travel of the competing **Vehicle** when crossing a line or passing between markers must be shown unless specified otherwise (ignoring 'shunts' to avoid markers).

12.9. A maximum **Penalty** (see **App.11 Chart 7c**) shall be applied if a **Competitor** crosses with both leading wheels a marked test line in the wrong direction out of the prescribed sequence or too many / few times, otherwise **Competitors** may correct their mistakes by returning to the point where they deviated from the test diagram unless otherwise stated in the **Official Documents**.

12.10. In changes of direction either lock can be used (unless the **Test** diagram specifically states otherwise).

12.11. **Clerks of the Course** wishing to define direction of travel between markers should include any necessary marked line(s).

12.12. In the event of re-run caused by a timing failure, the greater number of penalties incurred in either run will be added to the time taken in assessing the performance on that **Test.**

13. Marking

13.1. **Judges** must be appointed to each test to adjudicate on:

a. False starts

b. Crossing / failing to cross marker lines

c. Touching markers and not following correct route.

13.2. **Competitors** will be provided with a score card for the **Organisers** to record times and penalties at the completion of each **Test** run.

13.3. Marks will be lost for time taken (if applicable) and for any infringements of the test instructions such as striking a marker or crossing a boundary line.

14. Results

14.1. To be classified as a finisher **Competitors** must complete not less than half of the tests and must hand in their score card to **Officials** within 15 minutes of all other **Competitors** completing the final **Test.**

14.2. **Competitors** will start with zero marks.

14.3. All **Class** awards must be calculated on the basis of **Penalty** marks lost with the **Competitor** incurring the least penalty points being judged the winner.

14.4. In the event of a tie the **Competitor** who was first to have the lesser penalty from the start will be adjudged the winner unless another method of resolving ties is stated in the **Official Documents**.

14.5. Performance will be assessed as in **App.11 Chart 7** unless the 'Marks Lost' stated are modified by the **Official Documents**.

CHAPTER 20 CROSS COUNTRY

Appendix 10 - Technical Regulations (not Junior Trials)

General

1. Chassis

1.1. The **Vehicle** must have a minimum wheelbase of 127cm (50in).

2. Body (including Aerodynamics)

2.1. Unless rear-engined **Vehicles** must have a bonnet or metal casing of solid flame retardant material covering or surrounding the engine which is secured by fasteners of adequate strength and with a positive locking action.

2.2. Windscreens must be erected unless the **Event** takes place wholly on private property or the **Official Documents** state otherwise.

2.3. Tailgates may be removed.

2.4. Be equipped with mudguards for all **Wheels** which present no sharp edges and cover the complete **Wheel** (flange+rim+tyre) around an arc of 120 degrees. This minimum coverage must:

a. be achieved with a continuous surface of rigid material within which ventilation louvres may be fitted. The tyre must not be visible when viewed from above

b. extend forward ahead of the axle line

c. extend downward behind the **Wheel.**

3. Seating

3.1. **Vehicles** must be equipped with two fixed seats for the **Driver** and **Passenger** unless the **Official Documents** state otherwise.

3.2. The rearmost part of these seats must not be behind the rear wheel axis.

3.3. In the case of non-production **Vehicles** the rearmost part of any additional seat must not be more than 38cm behind the rear wheel axis.

4. Engine

4.1. If forced induction is used the coefficient will be 1.7:1 unless the **Official Documents** or specific **Technical Regulations** state otherwise.

4.2. Must have positive throttle closure by external springs so that the throttle automatically closes in the event of any failure of the linkage.

4.3. **Art.4.2 above** does not apply to **Vehicles** fitted as standard with original manufacturer fitted electronic throttle control for that **Vehicle.**

5. Suspension

5.1. **Vehicles** must be fitted with sprung suspension between **Wheels** and **Chassis** unless originally manufactured otherwise.

5.2. Where the top mounting of the shock absorber whether or not it is fitted with a coilspring is mounted directly to a main member of the roll-cage a brace must be fitted between the mounting point and the chassis or those members of the **Vehicle** frame acting as the **Chassis.**

5.3. It is prohibited to mount the shock absorber by drilling and / or welding a stud or bolt directly to the roll cage.

5.4. All mountings must be made with reinforcements in material at least the same thickness as the roll cage wall thickness.

5.5. The recommended mounting is shown in **App.11 Chart 6**.

6. Wheels

6.1. **Vehicles** may not be fitted with duplicated driving **Wheels** unless permitted by the **Official Documents**.

6.2. The **Official Documents** may permit the use of TUV Approved hub adapters / **Wheel** spacers up to a maximum of 30mm in depth.

7. Tyres

7.1. Tyres must be compatible with the **Wheels** and be acceptable to the **Organiser** unless a particular type and size of tyre is specified in the **Official Documents**.

7.2. **Vehicle**s should carry a securely fastened spare wheel and tyre capable of replacing any one of the **Wheels** in use on the **Vehicle** unless stated otherwise in the **Official Documents**.

7.3. **Vehicle**s can have more than four **Wheels** and tyres but they must be compatible.

7.4. All tyres must have at least the minimum legal tread depth on all tyres.

7.5. **Competitive Safaris** and **Hill Rallies** must specify tyre eligibility in the **Official Documents**. Tyres will be classified as **All Terrain Mud Terrain** or **Extreme** and will be judged against the AT and MT patterns leading manufacturers including BFG and General Tire.

8. Transmission

8.1. **Vehicles** must be equipped with an operable reverse gear and a non-torque biasing differential in full and free operation between the driving wheels unless:

a. A differential was not fitted by the manufacturer.

b. The **Official Documents** specify otherwise.

8.2. **Vehicles** may use all wheel drive (unless the **Official Documents** specify otherwise) and may have traction afforded by **Wheels,** track, marine propellers or any combination of these.

9. Electrical Systems

9.1. **Vehicles** must not be equipped with more than two auxiliary lights which must be located in accordance with legal requirements except where the **Event** takes place wholly on private property.

10. Silencing

10.1. **Vehicles** must comply with the **Noise** levels in **Ch.7 App.8 Art.2** but the following parts of that Chapter remain unmodified by this section: Brakes, Steering, Cooling, Oil Systems, Fuel Systems, Weight / Ballast, Exhausts.

Technical Regulations - Safety

11. Competitive Safari Point to Point and Hill Rally

11.1. There are three classifications of **Vehicle** design which whilst requiring the same principles of roll-cage design may employ different mounting methods.

11.2. **Monocoque Vehicles**: These are of unitary construction employing an integral **Chassis** structure.

a. They must mount their roll-cages in accordance with **Ch.7 App.3 Art.7** and fit a diagonal as provided by **Ch.7 App.13 Diagrams 53 and 54** and must fit longitudinal door bars complying with **Ch.7 App.3 Art.12** **(**side sections per **Ch.7 App.13 Diagram 18**)**.

b. A centre roof bar must be installed either diagonally or evenly spaced in line with the exterior longitudinal bars as shown in Ch.7 App.13 Diagram 56. If more than one centre bar is fitted the bars must be evenly spaced. Double crossed roof bars to the minimum specification for optional members are strongly recommended as shown in Ch.7 App.13 Diagram 19.

c. It is recommended that a horizontal bar be incorporated in the front hoop located approximately in line with the base of the windscreen which may be bolted or welded to the front hoop members and shall comply with the specifications for an optional member at Arts.12.1–12.7 below.

11.3. **Vehicles with Chassis**: These employ a separate **Chassis** structure from the body or superstructure.

a. They must mount their roll-cage directly to the **Chassis** in accordance with Ch.7 App.13 Diagram 41 following the principles of Ch.7 App.3 Art.7.

b. Exceptionally where the body contains a superstructure of internal steel pressings including the floor and the roll-cage is **ASN / FIA** certified it is permitted to install the roll-cage in accordance with Arts.11.2 above.

c. Where it is necessary to weld additional **Chassis** outriggers on which to mount the roll-cage these must be of at least 75x50mm box section steel and not less than 3mm thick.

d. Alternatively the main hoop may be constructed as in Ch.7 App.13 Diagram 40 allowing mounting to the main **Chassis** rails or as in Ch.7 App.13 Diagrams 53 and 54 where a beam is welded across the **Chassis** rails. This beam must comply with Art.11.3.c above.

e. Where the roll-cage passes through the superstructure's floor panels two alternative methods may be employed:

i. Either oversize holes allowing uninterrupted passage of the tubes to the chassis placed so as to allow for the movement of the superstructure where this is rubber mounted to the chassis or

ii. Or spreader plates complying with Ch.7 App.3 Arts.3.2–3.5 may be used to sandwich the floor where the cage structure is continued through the floor pan to the chassis and mounted as in Ch.7 App.13 Diagram 41.

f. The backstays in short wheelbase **Vehicles** may have to be mounted aft of the rear suspension mountings to the **Chassis** in order to comply with Ch.7 App.3 Art.7.

g. Ch.7 App.13 Diagrams 55, 56 and 60 show the installation for an external front cage to an internally mounted rear roll bar and backstays showing the method for attachment through the **Vehicle**'s roof skin. This installation may only be used where the body is rigidly mounted to the **Chassis.**

h. The backstays where mounted directly to the **Chassis** must be angled to the main roll hoop as shown in Ch.7 App.13 Diagrams 56 and 60 **Vehicles** configured with the backstays mounted in line with the main **Chassis** members built before 2014 are permitted.

i. The longitudinal bars connecting the front to rear roll bars should be straight or where a manufacturer's truck cab or hard top is fitted the bars may follow the contours of the roof.

j. A centre bar must be installed either diagonally or if evenly spaced in line with the exterior longitudinal bars as shown in Ch.7 App.13 Diagrams 56 If more than one centre bar is fitted the bars must be evenly spaced. Double crossed roof bars to the minimum specification for optional members are strongly recommended as shown in Ch.7 App.13 Diagram 19.

k. Where the roll-cage is mounted directly to the **Chassis** the front hoop may be mounted as shown in Ch.7 App.13 Diagram 57.

l. Alternatively the front hoop may be mounted directly to a fabricated chassis extension as shown in Ch.7 App.13 Diagram 58 The **Chassis** extension must be constructed as shown in Ch.7 App.13 Diagram 59.

m. External front hoops must be fitted with a horizontal bar approximately in line with the base of the windscreen of the same material and dimensions as specified for the main members of the ROPS and which may be bolted or welded to the front hoop. Recommended for **Vehicles** with an internal front

hoop where installation is practical.

n. Must be fitted with sill bars of the same material and specification as the main ROPS or primary chassis members or box section steel being a minimum of 40mm x 40mm x 3mm or 50mm x 25mm x 3mm. These may be welded or bolted to the main longitudinal **Chassis** members.

11.4. **Spaceframe Vehicles**: These are constructed entirely from a framework including an integral roll-cage made of tubes and/or box sections. For **Safari Plus** and all **Hill Rallies** those elements comprising the primary chassis components must be of at least the same material and dimensions as the primary **ROPS** members or equivalent box section steel.

a. All these **Vehicles** must comply with **Safety Criteria** Ch.7 App.3 Art.22 and Ch.7 App.13 Diagrams 39 or 44 and have roll- cages incorporated into the frame of the **Vehicle**.

b. The roll-cage must be welded and integral to the design.

c. Where there may be difficulty with rear-engined **Vehicles** in respect of fitting a diagonal brace braces to Ch.7 App.13 Diagrams 42 or 43 may be used.

d. A centre roof bar being of the same material and dimensions as the main **ROPS** members must be installed either diagonally or evenly spaced in line with the exterior longitudinal bars as shown in Ch.7 App.13 Diagram 56. If more than one centre bar is fitted the bars must be evenly spaced. Double crossed roof bars are strongly recommended to the minimum specification for optional members as shown in Ch.7 App.13 Diagram 19.

e. It is recommended that a horizontal bar be incorporated in the front hoop located approximately in line with the base of the windscreen being of the same material and dimensions as the main **ROPS** members and which may be bolted or welded to the front hoop members. For **Safari Plus** and all **Hill Rallies** this horizontal bar is mandatory.

f. A sill bar or single longitudinal door bar as shown in Ch.7 App.13 Diagram 18 of the same material and dimensions must be fitted.

12. All Vehicle Types

12.1. Materials and dimensions must comply with Ch.7 App.3 Art.20.1 or be to EN10255 (BS1387) medium weight blue band: i.e. 42.30x3.2mm for **Vehicles** up to 1000kg and 48.00x3.2mm for **Vehicles** exceeding 1000kg.

12.2. Optional tubular members may be added as at Art.12.1 above medium weight. 30.00mm x 3.2mm. Materials may not be mixed.

12.3. All diameters are outside diameters.

12.4. All weights are deemed to be un-laden.

12.5. New **Vehicles** which do not comply with the above must be approved in accordance with Ch.7 App.3 Art.21**.**

12.6. A **Vehicle Passport** is required for any existing **Vehicle** fitted with diagonal members forming a high cross as shown in Ch.7 App.13 Diagram 70**. Vehicle Passports** for these **Vehicles** must have been obtained by 1st January 2022 after which date no further **Vehicles** with such a design will be approved.

12.7. Sport UTV's must be fitted with a **Homologated ROPS.**

12.8. All **Vehicle**s must comply and be fitted with:

a. Ch.7 App.4 Art.2 - Tank Fillers / Vents / Caps

b. Ch.7 App.5 Art.5 - External Circuit Breaker

c. Ch.7 App.5 Art.6 - Red Warning Light

d. Ch.7 App.6 Art.3 - Hand-held extinguishers

e. Ch.7 App.7 Art.7 - Four point (min.) safety harness

12.9. If a windscreen is fitted it must be of either laminated glass or plastic of a minimum thickness of 4mm.

12.10. If a plastic windscreen is perforated for viewing purposes approved goggles or visors must be worn.

12.11. Two red warning lights must be fitted to the specification mandated by Ch.7 App.5 Art.6. These must be rearward facing and mounted as high as is practicable within the bodywork confines.

12.12. Red warning lights must be switched on in poor visibility or as instructed by the **Clerk of the Course.**

12.13. A **Passenger** grab rail / handle or strap must be fitted in front of the **Passenger** and must be constructed and installed so as not to compromise the safety of the **Crew.**

12.14. The fitting of mud flaps of a flexible material not less than 5mm thick behind each road wheel extending to a minimum of 4cm each side of the tyre tread and a maximum of 10cm above the ground when the **Vehicle** is stationary is mandatory.

12.15. All **Vehicles** must carry a **Small Spill Kit** complying with Ch.7 App.2 Art.22.15.

12.16. Steering provided by hydraulic operation (i.e. not by direct mechanical link) is permitted in **Competitive Safari** (Inc. **Competitive Safari Plus**) **Events** only. **Vehicles** with hydraulic systems must comply with the **Vehicle Technical Requirements** published by the **ASN** and **Vehicles** must be issued with a **Vehicle Passport** which must be obtained by application to the **ASN**.

13. Point to Point

13.1. Additional to Arts.1–12.16 **above.**

13.2. The requirement to comply with Art.12.14 above may be relaxed by **Official Documents**.

13.3. **Official Documents** may permit **Vehicles** complying with Arts.6 and 18 of this Appendix.

14. Team Recovery

14.1. All open or soft top **Vehicles** must comply with **Safety Criteria** Ch.7 App.13 Diagram 10 or with rear stays to Ch.7 App.3 Art.22 per Ch.7 App.13 Diagram 58, 53 or 40.

14.2. All **Vehicles** with manufacturer's hard top or truck cab are recommended to adopt **Safety Criteria** Ch.7 App.13 Diagram 10**.**

14.3. All **Vehicles** must comply with:

a. Ch.7 App.4 Art.2 - Tank Fillers / Vents / Caps

b. Ch.7 App.6 Art.3 - Hand-held extinguishers

14.4. The following criteria are recommended:

a. Ch.7 App.5 Art.5 - External Circuit Breaker

b. Ch.7 App.7 Art.6 - Three point (min.) safety harness

14.5. If a windscreen is fitted it must be of either laminated glass or plastic of a minimum thickness of 4mm.

14.6. If a plastic windscreen is perforated for viewing purposes goggles or visors must be worn.

14.7. Wire mesh is recommended to the front and rear of the cab windscreen and rear window.

15. Timed Trial

15.1. **Vehicle**s must be equipped with **ROPS** as follows;

a. **Monocoque Vehicles.** Must comply with Arts.11.2.a. and Arts.12.1–12.5 of this Appendix.

b. **Vehicles with Chassis.** Must comply with Arts.11.3.a–g. and Art.11.3.i and Arts 11.3.k-m of this Appendix. The backstays where mounted directly to the **Chassis** must be angled to the main roll hoop as shown in Ch.7 App.13 Diagram 60. Existing **Vehicles** configured with the backstays mounted in line with the main chassis members are permitted.

c. **Spaceframe Vehicles.** Must comply with **Arts.11.4.a–c above**.

15.2. All **ROPS** must comply with **Arts.12.1–12.5 above**.

15.3. All **Vehicles** must have hand-held fire extinguisher complying with **Ch.7 App.6 Art.3** and tanks, fillers, vents and caps must confirm with **Ch.7 App.4 Art.2**.

15.4. All **Vehicle**s must have a minimum of 4-point safety belt in accordance with **Ch.7 App.7 Art.7**.

15.5. Fitment of an external circuit breaker in accordance with **Ch.7 App.5 Art.5** is recommended.

15.6. If a windscreen is fitted it must be of either laminated glass or plastic of a minimum thickness of 4mm.

15.7. If a plastic windscreen is perforated for viewing purposes goggles or visors must be worn.

15.8. A **Passenger** grab rail / handle or strap should be fitted in front of the **Passenger** and where fitted must be constructed and installed so as not to compromise the safety of the **Crew.**

16. Challenge Events

16.1. All open or soft top **Vehicles** must comply with **Safety Criteria** **Ch.7 App.13 Diagram 10** or rear stays to **Ch.7 App.3 Art.22** per **Ch.7 App.13 Diagrams 53**, **50** or **38**.

16.2. All **Vehicle**s with manufacturer's hard top or truck cab are recommended to adopt **Safety Criteria** in **Ch.7 App.3 Art.22** relating to **Series Production** or **Touring** or **Sports Cars** and to have minimum rollover hoop with rearward stays per **Ch.7 App.13 Diagram 10.**

16.3. All **Vehicle**s must have a hand-held fire extinguisher complying with **Ch.7 App.6 Art.3** and tanks, fillers, vents and caps must conform with **Ch.7 App.4 Art.2**.

16.4. All **Vehicles** must have a minimum 3-point safety belt in conformity with **Ch.7 App.7 Art.6.**

16.5. If a windscreen is fitted it must be of either laminated glass or plastic of a minimum thickness of 4mm.

16.6. If a plastic windscreen is perforated for viewing purposes goggles or visors must be worn.

16.7. Where a windscreen and / or rear window is not fitted to **Art.16.5 above** a full width wire mesh is mandatory of a 2in maximum square aperture and a minimum 10g weld-mesh and must be securely fitted.

16.8. All **Vehicles** must carry a **Small Spill Kit** capable of absorbing minor spillages up to 1.25 litres of all **Vehicle** fluids. Used **Spill Kits** are to be disposed of in accordance with local or **National** guidelines.

17. Road Legal Challenge Vehicle

17.1. **Road Legal Challenge Vehicles** must fully comply with C&U Regulations in all respects. **Official Documents** may not relax this requirement.

17.2. **Vehicles** must comply with **Art.2.4 of this Appendix (mudguards).**

17.3. **Vehicle**s must not be fitted with "Tree Wires" nor carry equipment on the front bumper nor front bodywork.

17.4. Any **Vehicle** not complying with the above shall be deemed a **Challenge Special.**

18. Challenge Special

18.1. All **Vehicles** must be fitted with a circuit breaker(s) which isolates the battery from all electrical circuits which simultaneously stops the engine and which is operable by the driver whilst correctly seated. An external circuit breaker in compliance with the provisions of **Ch.7 App.5 Art.5** is recommended. **Vehicles** fitted with electric winches may use a second isolator operated by the primary circuit breaker either by means of a mechanical linkage or via a control circuit to ensure that all winches and their control solenoids are isolated on operation of the primary circuit breaker.

18.2. Rear and four wheel steering is permitted unless prohibited by **Official Documents**.

18.3. Steering provided by hydraulic or other method of operation (i.e. not by a direct mechanical link) is permitted. Hydraulic systems may not exceed an operating pressure of 150bar.

18.4. Independently operated front and / or rear brakes are permitted

19. Challenge Winching and Recovery Equipment: All Vehicles

19.1. The following equipment safety ratings are minima based upon a single line load. Multiple line rigging and the actual mass of the **Vehicle** may require equipment with a higher safety rating. The following minimum equipment must be carried:

a. A polyester towing rope or a tow strap rated to 2 tonnes minimum SWL.

b. Two shackles stamped with a minimum WLL of 3.25 tonnes and be CE marked.

c. Two tree protecting strops labelled with a minimum WLL of 2 tonnes and be CE marked.

d. Winch cable / rope must be rated in excess of the maximum rating of the winch.

e. Any loop at the end of a steel cable must be swaged. Any loop at the end of a synthetic rope must be spliced.

20. Trials and Orienteering

20.1. The following are recommended;

a. A roll-over hoop and rearward stays in accordance with **Ch.7 App.13 Diagram 10**.

b. A 3-point safety harness in accordance with **Ch.7 App.7 Art.6**.

c. A hand-held fire extinguisher in accordance with **Ch.7 App.6 Art.3**.

20.2. For **Orienteering Events** all **Vehicles** must carry a **Small Spill Kit** capable of absorbing minor spillages up to 1.25 litres of all **Vehicle** fluids. Used **Spill Kits** are to be disposed of in accordance with local or **National** guidelines.

20.3. For **Cross Country Vehicle Trial Events** steering provided by hydraulic or other method of operation (i.e. not by a direct mechanical link) is permitted. Hydraulic systems may not exceed an operating pressure of 150bar.

21. Tyro Trials

21.1. **Tyro Trials** allow all standard production 4x4 **Vehicles** with petrol or diesel engines (including military variants of civilian models) mass-produced by a motor manufacturer and generally available for normal retail sale or available via a network of dealers whether designed principally for the transportation of **Passengers** commercial use or dual purpose.

21.2. Saloon **Vehicles** and car derived commercial **Vehicles** are prohibited.

21.3. **Vehicles** must be currently registered and taxed.

21.4. Where appropriate the **Vehicle** must have a valid MOT Certificate where appropriate.

21.5. Seats may be replaced but the number of rear seats fitted must comply with those fitted to the **Vehicle** model by the manufacturer.

21.6. Bumpers must be retained in their original position.

21.7. Safety improvements may be added to the **Vehicle**.

22. Miscellaneous – All Events

22.1. The following parts of **Ch.7** remain unmodified by this section: Brakes, Steering, Cooling, Oil Systems, Fuel Systems, Weight / Ballast, Exhausts.

22.2. **Vehicles** must be currently registered and taxed.

22.3. With the exception of **Promotional Events** the **Official Documents** may relax the requirement for a **Vehicle** to be currently taxed if the **Event** takes place wholly on private property.

22.4. The **Official Documents** may permit the **Competition Vehicle** to be of a commercial type such as a van or pick up originally intended for commercial use or the carrying of goods.

22.5. **Vehicles** must also comply with all Statutory Regulations as to Construction and Use particularly with regard to brakes, lighting, tyres, warning devices, rear view mirrors, silencers, speedometers, wings and windscreen unless the **Official Documents** specify otherwise.

22.6. **Vehicles** must be fitted with a substantial towing point front and rear painted in a contrasting colour unless the **Official Documents** state otherwise.

22.7. **Vehicles** may be modified from manufacturer's original specifications providing that the modifications meet the **ASN Vehicle** regulations and the **Official Documents.**

22.8. Independently operated rear brakes are permitted.

22.9. The use of nylon ropes for recovery purposes is recommended.

22.10. Non-stretch ropes are acceptable.

22.11. Cables or chains are not recommended.

22.12. Where **Vehicles** are fitted with a compressed air tank the pressure shall not exceed 21bar.

22.13. The engine must not produce visible smoke or exhaust emissions during the **Event** however reasonable emissions such as an occasional "puff" are tolerated. Any named **Official** of the **Event** is empowered to **Judge** this. If the **Competitor** is unable to affect a solution during the **Event** they shall be **Disqualified** from the **Competition.**

22.14. **Sports Utility Task Vehicle**. A **Sport UTV** is a two-seater all-terrain **Vehicle** on general catalogued sale of which 100 **Vehicle**s are produced in a 12 consecutive month period of less than 1800cc corrected capacity and weighing less than 700 kg.

22.15. Rearward vision whilst properly seated within the confines of the **Vehicle's** bodywork or **ROPS** must be possible. **Vehicles** with solid rear bulkheads or an obstructed view along the centreline of the longitudinal axis must be fitted with either external rear view mirrors or a reversing camera. Mirrors and / or cameras must be operational during **Competition.**

22.16. Steering provided by hydraulic operation (i.e. not by direct mechanical link) is prohibited unless fitted on a production **Vehicle** by the manufacturer or permitted under the **Specific Technical Regulations** of this **Appendix**.

Appendix 11 - Charts and Diagrams

Chart 1

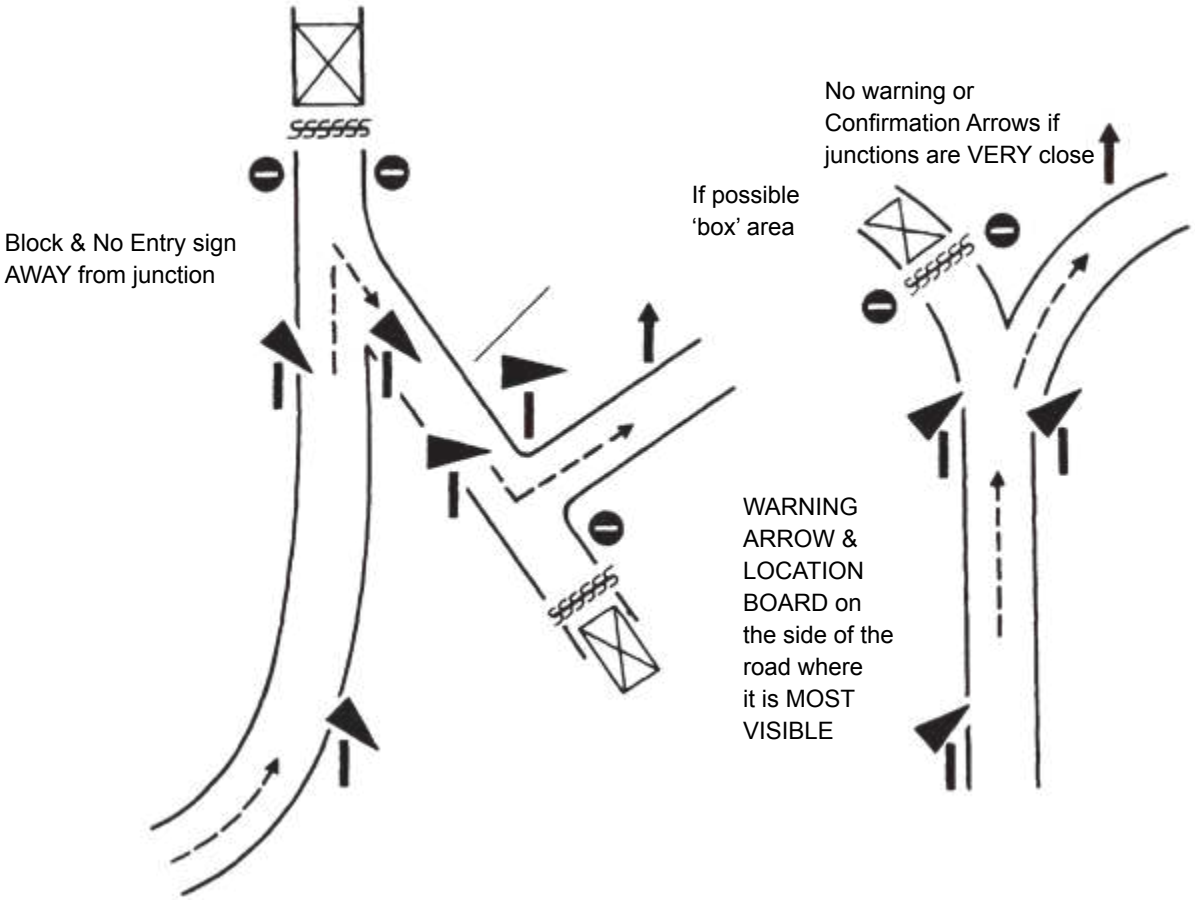

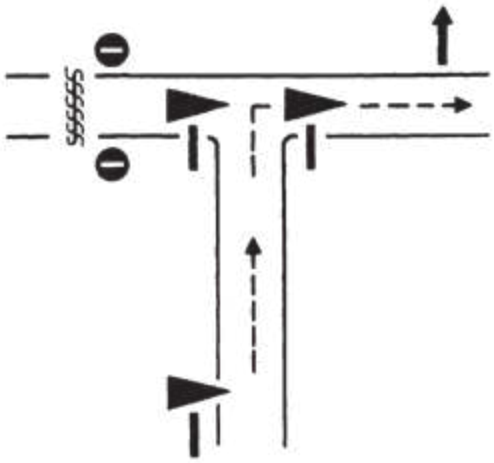

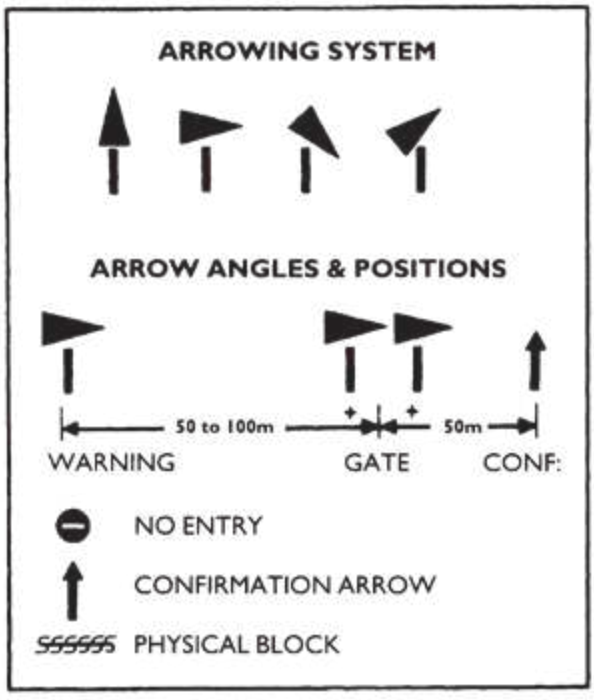

Chart 2

CONTROL TYPE	DISTANCE FROM PREVIOUS SIGN	POSITION	COLOUR	BOARD Black Symbols
PASSAGE CONTROL	n/a	Beginning of Control Area	Yellow background	
	25 metres	At Control Stop	Red background	
	50 metres	End of Control Area	Yellow background	
TIME CONTROL	n/a	Beginning of Control Area	Yellow background	
	25 metres	At Control Stop	Red background	
	50 metres	End of Control Area	Yellow background	
START OF SPECIAL STAGE	n/a	Beginning of Control Area (**Stage** Arrival)	Yellow background	
	25 metres	**Stage** Arrival Control	Red background	
	50 - 200 metres	**Stage** Start	Red background	
FINISH OF SPECIAL STAGE	n/a	Warning of **Stage** Finish (both sides of track)	Yellow background	
	100 metres	Flying Finish Line (both sides of track)	Red background	
		Countdown boards (evenly spaced between Flying Finish & Stop Line)	Black on white background	
	100 - 300 metres	Stop Line	Red background	
	50 metres	End of Control Area	Yellow	

Chart 3

ASSESSMENT OF PERFORMANCE – TARGET TIMED CROSS COUNTRY EVENTS

Performance will be assessed as follows, unless modified by the **Official Documents**

	Road Sections	Special Stages
(a) Not reporting at a control		Retired
(b) Not reporting at or providing proof of visiting a **Check**	30 mins	
(c) Not complying with a requirement of the **Road Book** or **Route Card** including visiting a **Control** more than once	30 mins	**Stage** Target
(d) Not complying with a reasonable instruction by an **Official** provided warning is given that a **Penalty** will be applied	15 mins	**Stage** Target
(e) Not attempting or being ready to attempt a **Stage** when instructed to do so		**Stage** Target
(f) Not completing a **Stage**		**Stage** Target
(g) Not performing a **Stage** correctly		**Stage** Target
(h) Making a false start at a **Stage**		1 min
(i) Taking an incorrect route on a **Special Stage**		**Stage** Target
(j) Every second taken to complete a **Stage** (subject to App.7 Art.5.24)		1/60 min
(k) For each minute under **Target Time** on a **Road Section** of **Service Area**	1 min	
(l) For each minute before or after **Due Time** at a **Main Control** (out)	1 min	
(m) Breach of a Statutory requirement concerning the driving of a motor vehicle	30 mins	
(n) Contravening App.7 Art.6.16	30 mins	
(o) Breach of **Technical Regulations** concerning the use of lights and breaches of the **Construction and Use or Lighting of Vehicles Regulations**	30 mins	
(p) Excessive **Vehicle Noise**, excessive speed or driving likely to bring motor sport into disrepute (App.2 Art.6.1 and App.7 Art.2.2.a)	30 mins	
(q) Damaged or ineffective silencing system	30 mins	
(r) Damage to car (App.7 Art.3.2)	10 mins	
(s) Receiving assistance contrary to App.9 Arts.4.1–4.7 or Arts.5.12–5.16 or contravening App.7 Art.8.1	30 mins	**Stage** Target
**(t) Breach of Regulations 25, App.7 Art.8.4, App.7 Art.3.2, App.9 Arts.5.1–5.3 App.9 Arts.5.5–5.9 App.9 Arts.6.1–6.8	Disqualification	
†(u) Breach of Regulation App.9 Art.4.8		**Stage** Target plus 30 mins
(v) Second offence (m), (n), (o), (p), (q), (s)	Disqualification	
(w) Breach of Regulation App.9 Art.4.8, App.7 Art.2.7, App.9 Arts.2.22–2.32	Disqualification	

These penalties may not be decreased by the Official Documents. The decision on causing excessive noise during an event is left to the discretion of the **Judge, **Environmental Scrutineer** (Ch.5 Part A App.6), or **Driving Standards Observer** (Ch.5 Part A App.8) who may refuse permission to proceed at any time. Driving Standards Observers' decisions on imposing a penalty for excessive speed or bringing the sport into disrepute will be penalised according to the **Official Statements**. Note also powers contained in App.7 Arts.2.4–2.8

†Any road section penalties thus incurred will be applied up to and including **Disqualification.**

Chart 4

ASSESSMENT OF PERFORMANCE – CROSS COUNTRY EVENTS USING SCHEDULED TIMING

Performance will be assessed in one of the methods listed. The 'Marks Lost' penalties as shown below will apply, *unless modified by the **Official Documents** or the **Official Documents** specify the Fails system*

	Marks Lost	or Fails
(a) Not reporting at a control	30 mins	1
(b) Not reporting at or providing proof of visiting a check	30 mins	1
(c) Not complying with a requirement of the Road Book or Route Card including visiting a control more than once	15 mins	1
(d) Not complying with a reasonable instruction by an Official provided warning is given that a penalty will be applied	15 mins	1
(e) Not attempting or being ready to attempt a **Stage** when instructed to do so	**Stage** Target	
(f) Not completing a **Stage**	**Stage** Target	
(g) Not performing a **Stage** correctly including taking the incorrect route	**Stage** Target	
(h) Making a false start at a **Stage**	1 min	
(i) Every second taken to complete a **Stage** (subject to App.7 Art.5.24)	1/60 min	
(j) Arriving at a control or check, other than at the end of a non- competitive section before Scheduled time per minute	2 mins	
*(k) Arriving at a control or check after due time – per minute, where timing is to whole minutes –per fraction of a minute, where timing is to a fraction of a minute	1 min or fraction	Max. penalty not to exceed that for (a) missing a control
**(l) Early arrival at the end of a non-competitive section	30 mins	1
**(m) Breach of a Statutory requirement concerning the driving of a motor vehicle	30 mins	1
(n) Contravening App.7 Art.6.16	30 mins	1
(o) Breach of Technical Regulations concerning the use of lights and breaches of the Construction and Use or Lighting of Vehicles Regulations	30 mins	1
(p) Excessive **Vehicle Noise**, excessive speed or driving likely to bring motor sport into disrepute (App.2 Art.6.1 and App.7 Art.2.2.a)	30 mins	1
(q) Damaged or ineffective silencing system	30 mins	1
(r) Damage to car (App.7 Art.3.2)	10 mins	1
(s) Receiving assistance contrary to Appendix 9 Arts.4.1–4.7 or Arts.5.12–5.16 or contravening App.7 Art.8.1	30 mins	1
**(t) Breach of Regulations App.6 Art.2.1–2.6, App.7 Art.3.2, App.9 Arts.5.1–5.3, App.9 Arts.6.1–6.8, App.7 Art.8.4, App.7 Art.3.2, App.9 Arts.5.1–5.3, App.9 Arts.6.1–6.8	Disqualification	
†(u) Breach of Regulation App.9 Art.4.8	**Stage** max. plus 30 mins	
(v) Second offence (o), (p), (q), (r), (s)	Disqualification	
(w) Breach of Regulation App.9 Art.4.8, App.7 Art.2.7, App.9 Arts.2.22-2.32	Disqualification	

*Except in 'neutral' sections where only a maximum lateness **Penalty** equal to (a) shall be applied.

These penalties may not be decreased by the **Official Documents. The decision on causing excessive noise during an event is left to the discretion of the **Judge, Environmental Scrutineer** (Ch.5 Part A App.6), or **Driving Standards Observer** who may refuse permission to proceed at any time. **Driving Standards Observers'** decisions on imposing a penalty for excessive speed or bringing the sport into disrepute will be penalised according to the **Official Documents.** Note also powers contained in App.7 Arts.2.4–2.8

†Any road section penalties thus incurred will be applied up to and including **Disqualification.**

Chart 5

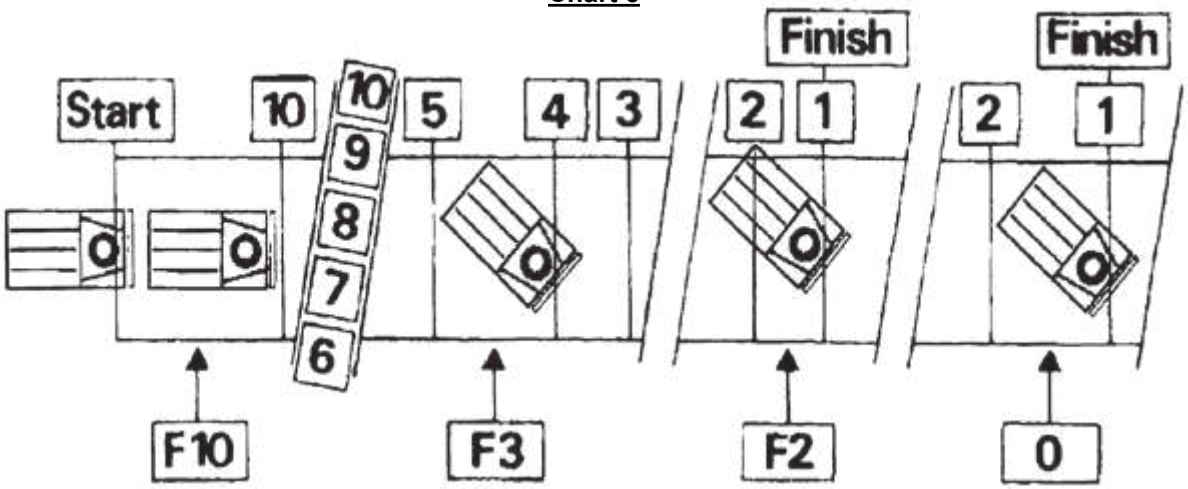

Diagram illustrating the application of 204 to 212. The lower figures preceded by F indicate the correct penalties for a car stopping in the position show.

Chart 6

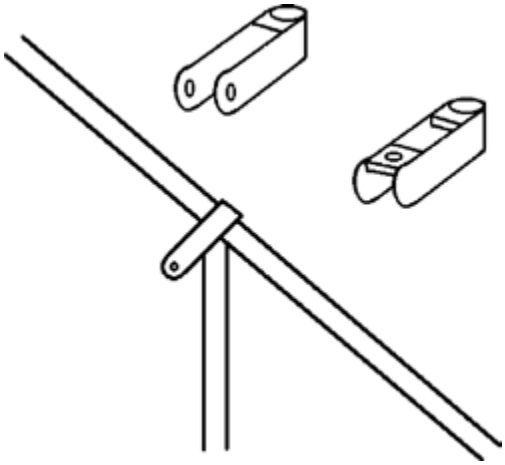

Chart 7

CROSS COUNTRY DRIVING TEST PENALTIES

	Marks Lost
(a) Each minute late in reporting at the start or a restart	5*
(b) Not attempting or being ready to attempt a test when instructed to do so	40*
(c) Not performing a test correctly, other than in (d) or (e) or not completing the test or making a false start	40*
(d) Striking any barrier, wall or marker or crossing the boundary of a test (per mistake)	5
(e) Failing to cross or stop at any line or specified position as required in a test (per mistake)	5
(f) Every second (and fraction) taken to complete test	1 fraction
(g) Every second (ignoring fractions) to complete test	1 no fractions

Chart 8

CODE	PR REQUIREMENTS
A	Personal visit to an adult member of household within 100m.
B	Letter to each householder within 100m.
C	Public notice.
D	Personally visit and obtain signature from an adult member of any household within 500m of any point where competitors are required to stop (i.e. any control or clue point).
E	Consult RLO.
F	Personal visit to an adult member of household within 150m.
G	If timed to the second, not pass through any area which has in excess of 20 occupied dwellings within 300m radius of the route, unless written agreement is given by all of the householders within that area and the Motorsport UK has given its permission.
H	Letter to each householder within 100m, unless the RLO agrees to a lesser requirement.

Chart 9

ALL EVENTS TRAVERSING THE PUBLIC HIGHWAY

Permit	Section	Road Type	Time	PR Requirement
ROAD RALLY (inc. HISTORIC)	STANDARD (timed to second) inc. STANDARD (time to minute)	All Classes (see 10.2)	23.59 to 1 hour after sunrise	A(G) D
		All Classes	24 hour	B D
	REGULARITY	A & B Habitation	22.00 to 07.00	C D
		Yellow/White UCR/Private	24 hour	H D
		A & B Habitation	07.00 to 22.00	E D
	TRANSPORT & NEUTRAL	White/UCR/ Private	24 hour	B D
		Yellow	22.00 to 07.00	E D
		Habitation A, B & (Yellow 07.00 to 22.00)	24 hour	C D
ECONOMY, NAVIGATIONAL & 12 CAR RALLIES (All types) VINTAGE (22.00 to 07.00)	STANDARD & REGULARITY	A & B Habitation	22.00 to 07.00	C D
		A & B Habitation	07.00 to 22.00	E D
		Yellow/White UCR/Private	24 hour	H D
	TRANSPORT & NEUTRAL	White/UCR Private	24 hour	B D
		Yellow	22.00 to 08.00	E D
		A, B, Habitation & (Yellow 07.00 to 22.00)	24 hour	E D

VINTAGE (07.00 to 22.00)	ALL	ALL	07.00 to 22.00	C	D
VETERAN	ALL	ALL	24 hour	C	D
NAV. SCATTERS	ALL	ALL	24 hour	E	D
TREASURE HUNTS TOURING ASSMS.	ALL	ALL	24 hour	E	D
SPECIAL STAGE RALLIES including SINGLE VENUE STAGE RALLIES	ROAD	A & B, Habitation	22.00 to 07.00	C	D
		Yellow	22.00 to 07.00	B	D
		White/UCR/ Private	24 hour	B	D
		A, B, Yellow Habitation	07.00 to 22.00	E	D
	ACCESS/EGRESS To/From STAGE To PUBLIC HIGHWAY	ALL	24 hour	F	E
	SPECIAL STAGE	Private or Roads Closed by appropriate Legislation	24 hour	F	
CLASSIC TRIALS and ALL OTHER EVENTS USING THE PUBLIC HIGHWAY		White/UCR/ Private	24 hour	B	D
		Yellow	22.00 to 07.00	B	D
		A, B, Habitation & (Yellow 07.00 to 22.00)	24 hour	C	D

For Codes see above in Table 8

CHAPTER 20 CROSS COUNTRY

Appendix 12 - Public Relations Guidance

1. Public Relations

1.1. Effective **Public Relations (PR)** work must be undertaken by **Organisers** of all **Events** using the **Highway**. The following advice will be useful:

1.2. Prior consultation with **Route Liaison Officers** who might require additional **PR** work in sensitive areas is essential. The work should be completed to allow enough time to undertake a re-route should this prove necessary.

1.3. Be diplomatic positive and clear about the legal aspects of route authorisation. If the **Event** is run in England or Wales do not intimate that it is authorised by the **Police.**

1.4. Avoid asking for 'authorisation' or 'permission' from householders as this can invite unnecessary difficulties.

1.5. Special consideration should be given to householders with pets or livestock.

1.6. All **PR** must be carried out by responsible members of the **Organising Club** or of a **Local Club**. All **PR** letters should be vetted and checked by the **RLO** and must indicate who the **Organiser** is (with a contact address and phone number) the date of the **Event** in which direction it is travelling and the approximate time of passing.

1.7. Where **Organisers** publish a guide to the route or specific locations for spectators they should ensure that:

a. Householders within 500m of any specifically advised location have been effectively contacted without difficulty and that these areas are properly marshalled

b. The information contains warnings of locations that spectators should avoid (blackspots sensitive areas etc).

1.8. Ensure that each **PR** crew prepares a report on each visit and that these are available to the **RLO** on request and to the **Clerk of the Course** and **Stewards** at the **Event.** Special note should be made of problem areas and reports must passed to **RLOs** for the benefit of future **Events.**

1.9. Contact should be made with local Police stations before and immediately after all **Events.**

1.10. See **App.11 Charts 8** and **9** for detailed requirements.

CHAPTER 20 CROSS COUNTRY

Appendix 13 - Technical Regulations for Junior Trials Vehicles

1. Chassis and Body

1.1. The **Chassis** and bodywork in **Junior Trials Vehicles** must be standard except where modified to comply with these **Regulations** and must be that from a proprietary machine.

1.2. Ch.7 App.7 Art.1.4 does not apply in respect of the seat cushion being 15.25cm below the adjacent body.

1.3. App.10 Art.1.1 does not apply.

2. Engine

2.1. **Vehicles** must be fitted with a four-stroke petrol or diesel vertical crankshaft engine of the industrial and commercial restricted type and designed for use on a **Ride on Mower** or **Lawn / Garden Tractor.**

2.2. The engine must be fitted in its original location and retain its governor or restrictor which may not be modified or removed.

2.3. The engine must be fitted with an air filter the type and location of which is free.

2.4. The engine must be fitted with an effective silencer such that the **Vehicle** complies with the **Noise** limits provided by Ch.7 App.8**.**

2.5. The silencer and exhaust manifold are free as to type and location but must be fitted with shields when located outside of the bodywork or **Chassis.**

3. Transmission

3.1. A manual constant mesh transmission must be fitted of the type originally fitted to the **Vehicle.**

3.2. Transmissions of an alternative make or model may be fitted.

3.3. The **Driver** must be protected from all drive belts / chains.

3.4. **Vehicles** must not be fitted with a locked locking or torque-biasing differential.

4. Wheels and Tyres

4.1. **Wheels** and tyres are free.

5. Brakes

5.1. **Vehicles** must have brake systems operating on both rear wheels simultaneously by a single foot pedal which may activate the brakes either mechanically or hydraulically.

5.2. The brakes must be capable of locking the **Wheels** when applied at maximum speed.

5.3. A mechanical handbrake must be fitted which operates directly on both rear wheels and can hold the **Vehicle** on a 45° longitudinal gradient.

6. Steering

6.1. The steering system must retain its original location and operation and must be un-assisted.

6.2. Steering system components are free and may be strengthened.

6.3. A steering damper may be fitted.

7. Front Axle

7.1. The location and mounting of the front axle must be standard to the **Vehicle** and no alteration may be made to the **Chassis** or bodywork to increase articulation.

7.2. The front axle may be modified or replaced.

7.3. Movement of the front axle may be controlled by the addition of springs and / or dampers or friction materials between the axle and the **Chassis.**

8. Safety

8.1. A roll-cage (see **Ch.7 App.13 Diagram 61**) must be fitted comprising a front and rear hoop which extend the full width of the bodywork and which maintain the minimum clearance above the **Competitor's** helmet when properly seated (**Ch.7 App.13 Diagram 47**)

8.2. Sidebars must be fitted which prevent the **Driver's** feet from involuntarily leaving the confines of the **Vehicle.**

8.3. A rear brace must be fitted to the rear hoop to guide and locate the shoulder straps of the seat belt.

8.4. The roll-cage comprising the front and rear hoops lateral bars side bars and rear brace must comply with **Ch.7 App.3 Art.20** or be to BS1387 medium weight blue band (ie a minimum 42.30x3.2mm external diameter and wall thickness).

8.5. The roll-cage must be:

a. Bolted to the chassis with 3mm thick spreader plates and a minimum of two 10mm high tensile bolts at 25mm between centres per mounting (**Ch.7 App.13 Diagram 22**) or

b. Bolted to outriggers of 3mm wall thickness bolted / welded to the chassis using 3mm thick saddles and two 10mm high tensile bolts at 25mm between centres per mounting per **Ch.7 App.13 Diagram 62** or

c. Welded to outriggers of 3mm wall thickness bolted / welded to the **Chassis** as **Ch.7 App.13 Diagram 54.**

8.6. Suitable head protection is strongly recommended.

8.7. A 4-point seat belt must be fitted (**Ch.7 App.7 Art.7**).

8.8. A circuit breaker conforming to **Ch.7 App.5 Art.5** which is operable by the **Driver** when properly seated and which is clearly marked must be fitted.

8.9. The battery must be securely mounted and fitted in a sealed container or under the bonnet.

8.10. A strong and clearly marked recovery point must be fitted to the rear of the vehicle.

8.11. The seat must be rigidly located and designed to securely locate the **Driver** up to and including the shoulders.

8.12. A head restraint must be fitted where not integral to the seat complying with **Ch.7 App.7 Art.4.**

8.13. The fuel tank must be located under the bonnet and comply with **Ch.7 App.4 Arts.1.2 – 1.9.**

9. Miscellaneous

9.1. A front bumper or bush guard must be fitted to protect the chassis and bodywork. This may provide location for under **Chassis** protection and must provide a suitable towing point.

9.2. Under-**Vehicle** protection skid plates / guards may be fitted to protect the steering engine and transmission.

9.3. **Ballast** may be added to the **Vehicle** provided it is securely attached to the **Chassis** or skid plates.

9.4. **Ballast** must be located below the floor line.

Chapter 21

Land Speed Records

CHAPTER 21 LAND SPEED RECORDS

This Chapter must be read in conjunction with Chapters 1-11 as appropriate.
This Chapter is separated into the following appendices:

App.1	General Provisions
App.2	FIA World, International and National Records

CHAPTER 21 LAND SPEED RECORDS

Appendix 1 - General Provisions

1. Jurisdiction

1.1. The **FIA** will adjudicate upon all claims to **International Class** and **World Records**. Claims to such **Records** following attempts within the territory of **ASN** will be submitted to the **FIA** by **ASN**. **ASN** will adjudicate upon all other claims to **Records** made within its territory. At all times these **Regulations** should be read in conjunction with the **FIA**'s **Appendix "D"**.

2. Records Recognised

2.1. The only **Records** which may be recognised are Local **Records**, **National Records**, **International Records** and **World Records**. No distinction is drawn between **Records** made on a track and **Records** made on a road

2.2. Local **Record** – recognised by the **ASN** within its jurisdiction as the result achieved on an approved **Course** whatever the nationality of the **Driver**. A **Record** made during a **Race** is not recognised.

2.3. **National Record** – established in conformity with the rules of **ASN** and deemed to be a **Class** record on its territory or the territory of another **ASN** with their prior authority. Irrespective of **Class** it may also be recognised as an absolute **National Record**.

2.4. **International Record** – recognised by the **FIA** as the best result achieved in one of the Categories, groups, cylinder – capacity **Class**es or other sub-divisions prescribed in the **International Sporting Code** and **Appendix D**.

2.5. **World Record** – recognised by the **FIA** as the best result achieved irrespective of **Category**, group or **Class** prescribed in the **International Sporting Code** and **Appendix D**.

2.6. **Records** re**stricted to their own Class. A Vehicle having established or beaten a Record in its own Class may beat a World Record but cannot beat the same Record in any other Class.**

3. Vehicles Eligible to Establish Records

3.1. **FIA World** and **International** – App.2.

3.2. **National** – App.2

4. Times & Distances Recognised

4.1. **International** – refer to **Appendix D**

4.2. **National**

Miles – **Standing Start** ¼ – 1 – 5 – 10 – 50 – 100 – 200 – 500 – 1000 – 2000 – 5000 – 10000

Flying Start – ¼ – 1 – 5 – 10

Kilometres – **Standing Start** – 500m 1 – 5 – 10 – 50 – 100 – 200 – 500 – 1000 – 2000 – 5000 – 10000

Flying Start – 500m – 1 – 5 – 10

Hours – **Standing Start** – 1 – 3 – 6 – 12 – 24

5. Record Attempts

5.1. All attempts shall be subject to the prescriptions of the **FIA International Sporting Code** and the **ASN National Competition** Rules in so far as they can be applied.

5.2. For all **Record Attempts** reference should be made to **FIA Appendix D**.

5.3. An **International** or **National** record attempt or the organisation of a group of **Record** attempts are a sporting **Event**.

5.4. **National Attempts** are a **National Event** independent of the nationality of the **Competitor**s.

5.5. **Record** attempts can be made on a **Track** or **Road**.

5.6. The **Attempt Permit** may be issued to the **Competitor**'s **Entrant** attempting the **Record** or an **ASN Registered Club**.

5.7. The successful **Competitor**(s) will be the **Record** holder subject to ratification by **ASN**.

5.8. A successful attempt must represent an increase of 1% of the average speed of the current **Record**.

5.9. The **Competitor** may not publish or have published by any person or distribute or have distributed by any person the result of an **Attempt** before written ratification by the **ASN** unless prior written permission is given by the **ASN** and the proposed publicity is first approved by the **ASN**. Where such permission has been given by the **ASN** then the results may be circulated and must include the statement "Subject to **ASN Ratification**" in clearly visible printed letters. The **ASN** has the right to reject or approve the proposed publicity.

6. Application for a Record Attempt

6.1. The **Entrant** or **Organisation** must submit a completed **Application** for **Authorisation** to the **ASN**'s **Head of Speed**, at least 6 weeks prior to the date of the **Attempt** together with the appropriate Fee as published from time to time by the **ASN** (see Ch.1 App.2).

6.2. An **Organising Permit** known as an **Attempt Permit** is issued as the **ASN** authorisation.

6.3. **Mandatory** requirements by way of **Declaration** as set out below at a – n are required for all **Authorisations**:

a. Proof of landowners' permission.

b. Local Police Authorities to be informed.

c. Fully licensed **Speed Event Rescue Unit** and **Crew** required.

d. For any **Venue** or **Course** without a valid **Track Licence** a plan and surveyors report must be submitted.

e. A valid **Track Licence** is required for all **Attempt**s on a **Track**.

f. Details of all proposed **Official**s

g. Details of proposed **Scrutineer**ing facilities and arrangements

h. **Technical** details of the **Vehicle** attempting the **Record** (to be passed to the **ASN Technical** Department for review (note: the **ASN** will review and may reject the **Vehicle** or require modifications on safety grounds)

i. Provide a serious incident management plan respecting the **ASN** Serious Incident Protocol

j. Provide an **Event Schedule**.

k. Liability for all **ASN** costs.

l. Liability for all **Official**s costs

m. Details of any **Noise** or environmental restrictions.

n. Necessary Insurance

7. Officials

7.1. The **ASN** will appoint a **Steward** who will be responsible for the supervision of the **Attempt and who**:

a. has the authority to stop, suspend or modify the **Event Schedule**;

b. will maintain a detailed log of all stops and operations at a **Control Station**;

c. must after the **Attempt**, send to the **ASN** a detailed report and the relevant reports of the **Timekeeper** and the **Scrutineer** no later than 48 hours following the conclusion of the **Event** subject always to **Art.10.6 below** (technical verification). Where the **Steward**'s Report is delayed by virtue of **Art.10.6 below**, then the **Steward** must notify the **ASN** accordingly.

7.2. Other **Official**s as required to supervise operations at **Control Stations** and observation along the **Course**.

7.3. The **Entrant** is responsible for nominating an **Attempt Co-ordinator** and meeting the costs of an **ASN** licensed **Timekeeper**, Eligibility **Scrutineer** and **Rescue Unit** in each case approved by the **ASN** for **Record Attempt**s.

7.4. An **Attempt Co-ordinator** may not necessarily be the **Entrant** and is the person responsible for the co-ordination of the **Attempt** which includes the liaison with the **Official**s and represented organisations.

8. Licences

8.1. The **Competitor**(s) must hold a valid **International Competition Licence** for an **International Record Attempt**; for a **National Record Attempt** an **International** or **National** or a licence endorsed "**Record Attempt**s **Only**" is required

9. Course

9.1. The **Course** may be either a permanent or temporary **Track** or a **Circuit** and have a valid **Track Licence** relevant to the **Attempt**.

9.2. The **Course** may be of an '**Open**' type with a **Control Line** at each end of the measured distance or of the '**Closed**' type with a single **Control Line** (see Arts. 31, 38 and 39 below).

9.3. A a **Closed Course** is section of **Track** covered without stopping with reversal of the direction of running after crossing the **Control Line** at each end of a measured distance ..

9.4. During an **Attempt** of up to 24 hours only the **Vehicle** attempting the record and the nominated **Official**s, **Rescue** and service **Vehicles** are permitted to use the **Track**.

9.5. For **Records** up to 1 mile the **Course** will be of the open type with a maximum gradient of 1%; for flying starts this will apply to the two extensions at the beginning and end of the measured distance even if they are not straight and are used as part of the **Course** for the flying start.

9.6. The measured distance must be covered in both directions.

9.7. Consecutive runs must not exceed 60 minutes.

9.8. Should a **Competitor** make an unsatisfactory start and providing the **Vehicle** has not crossed the **Control Line** a re-start is permitted.

9.9. For **Records** up to 10 miles or 10 kilometres the **Course** may be of the **Open** or **Closed** type.

9.10. **Open Course** – the measured distance must be covered in both directions and including the return run must not exceed 1 hour.

9.11. **Closed Course** – the car crossing the single **Control Line** lap after lap. The direction of running is free as appropriate to the track licence.

9.12. For **Records** over 10 miles and **Time Records** the course must be of the **Closed** type. The direction of running is free.

9.13. For **Records** over 5000km and 24 hours on a **Circuit** where all curves are in the same direction, the direction of running may be reversed every 5000km by crossing the **Control Line** and turning back and passing over it again in the opposite direction without stopping.

10. Scrutineering

10.1. Prior to the start the **Scrutineer** will verify that the **Vehicle** conforms to the **Category**, group and **Class**, and the relevant **Vehicle** regulations and safety requirements of the **Code** and or the **NCR** as the case may be as well as any requirements of the **ASN** (**see Art.6.3.h above**).

10.2. Particular attention must be paid to the **Competitor** respecting applicable Seat and Harness and Personal **Safety** Equipment obligations and, in any case where the vehicle is to use a parachute retardation system, then the requirements of the current **FIA Code** Appendix must be verified by the **Scrutineer**.

10.3. Using approved measuring instruments the **Scrutineer** must measure the cubic capacity of the engine. Alternately the **Scrutineer** may affix **ASN** approved seals to the relevant components for examination at the conclusion of the **Attempt**. Seals may only be broken by the person affixing the seal or with their written permission by a person designated by the **ASN** to make the examination.

10.4. The **Vehicle** must remain under the control of the **Scrutineer** if transported to another place for verification.

10.5. At the end of the **Attempt** the **Scrutineer** will make the final verification of the **Vehicle** and give a written report to the **ASN Steward**.

10.6. Where the technical verification of the **Vehicle** is not concluded by the **Scrutineer** on the day of the **Event** then it should occur as soon as reasonably practicable and in any event within 14 calendar days.

11. Timekeeping

11.1. A **Speed Timekeeper** of the appropriate grade and as nominated by the **ASN** is required.

11.2. On an **Open Course** time is recorded as the **Vehicle** crosses the start and finish lines in both directions with a break at the end of each run.

11.3. On a **Closed Course** times must be recorded lap after lap as the **Vehicle** crosses the single start-finish line.

11.4. At the end of the **Attempt** the **Timekeeper** must give to the **ASN Steward** a written report together with the original record of times and relevant calculations.

12. Control Stations

12.1. **Stations** may be located along the course at designated areas.

12.2. Authorised **Stations**:

a. **Open Course** – One next to the **Start Line** and **Finish Line**. The station near the **Start Line** will be the main station where any operation allowed will be carried out.

b. **Closed Course** – One next to the single **Control Line**.

c. **Intermediate** stations at a maximum interval of 5km (2.5km in the case of simultaneous attempts).

d. A **Vehicle** shall not be out of sight for more than one minute during its travel.

12.3. At all **Stations** the **Vehicle** must be stationary with or without engine running. Pushing the **Vehicle** within the limits of the **Station** by the **Competitor**s' assistants is permitted.

12.4. **Start**ing the engine by a push start is permitted or by its normal designated starting method.

12.5. If the **Vehicle** stops during an **Attempt** it may restart by its own means and continue.

12.6. Should the **Vehicle** stop along the **Course** the **Driver** may push the **Vehicle** without any outside assistance to the nearest **Station** for authorised replenishment or repairs to enable the **Vehicle** to resume the **Attempt**.

13. Authorised Operations

13.1. Before the **Attempt** except for replenishment materials, all spare parts, auxiliary materials and tools that are to be carried on the **Vehicle** or held at a **Main Station** shall be listed with their total weight and that list must be given to the **ASN Steward**.

13.2. **Only** the items listed at **Art.13.1 above** are permitted to be used during the **Attempt**. Body panels, window glass and exhaust systems (including turbocharger) shall be considered as replenishment materials and need not be listed.

13.3. **Competitor**s' assistants using the authorised spare parts, auxiliary materials and tools located at the **Station** may carry out operations at main and intermediate **Stations**. The **Vehicle** must be stationary during such operations.

13.4. The **Station** may have tools, materials and equipment similar to that of a normal road service station.

13.5. All operations concerning refuelling, cleaning, tuning, fitting, replacement of wheels, tyres, spark plugs, injectors, electrical components, repairs and welding are authorised.

13.6. Welding of the fuel tank, its lines and attachments is prohibited at any **Station** but may be permitted at a designated place purely for the repair and under the supervision of an appointed **Official** and with suitable fire-fighting equipment at hand.

13.7. Replenishment materials are deemed to be: wheels, tyres, spark plugs, injectors, electrical components, **water,** oil, fuel, hydraulic fluids, hoses, fastening devices and items normally found at a normal road service station. Coachwork, body panels, window glass and exhaust systems (including turbocharger) shall be considered as replenishment materials.

13.8. Replenishment is permitted at the intermediate **Stations**.

13.9. Operations not permitted at **Stations**, may only be made by the **Driver** alone using the parts, tools and materials authorised for the **Record Attempt**.

13.10. Operations permitted outside of a **Station** or along the **Course** shall be those made by the **Driver** alone using the parts, materials and tools authorised for the **Attempt** and without any outside assistance.

13.11. Spare parts, auxiliary materials, tools and ballast carried on the **Vehicle** must be property positioned and firmly secured.

14. Records Over 10 Miles and Time Records

14.1. Except for replenishment materials, all spare parts and auxiliary materials not carried by the **Vehicle** shall be at the **Main Station**.

14.2. The equivalent total weight shall be carried by the **Vehicle** as ballast; the safety roll-over bar or cage ('ROPS') shall be considered as ballast.

14.3. The total weight of the spare parts, auxiliary materials, tools and ballast carried by the **Vehicle** shall not exceed 5% of the homologated or declared weight of the **Vehicle**, plus 20kg. The weight of the replenishment material is free.

CHAPTER 21 LAND SPEED RECORDS

Appendix 2 - FIA World, International and National Records

1. FIA World and International Records

1.1. Details are available on the FIA website.

National Records

2. Vehicles Eligible to Establish Records

2.1. Special Vehicles: Vehicles on at least four wheels not aligned, which are propelled otherwise than through their wheels.

2.2. Special Automobiles: A land Vehicle propelled by its own means, running on at least four wheels not aligned, which must always be in contact with the ground; the steering must be ensured by at least two of the wheels, and the propulsion by at least two of the wheels.

3. Groups, Classes & Cylinder Capacity

3.1. **Group I:** Reciprocating 2 or 4 stroke engine with forced induction

3.2. **Group II:** Reciprocating 2 or 4 stroke engine without forced induction

3.3. **Group III:** Diesel cycle engine with forced induction

3.4. **Group IV:** Diesel cycle engine without forced induction

3.5. **Group V:** Rotary engine with forced induction

3.6. **Group VI:** Rotary engine without forced induction

3.7. **Group XV:** Hydrogen reciprocating engine

3.8. **Groups I & II:** combined – with or without forced induction including Hybrid Vehicles

3.9. **Groups III and IV:** combined – with or without forced induction.

3.10. **Class A:** over 8000cc

3.11. **Class B:** over 5000cc up to 8000cc

3.12. **Class C:** over 3000cc up to 5000cc

3.13. **Class D:** over 2000cc up to 3000cc

3.14. **Class E:** over 1500cc up to 2000cc

3.15. **Class F:** over 1100cc up to 1500cc

3.16. **Class G:** over 750cc up to 1100cc

3.17. **Class H:** over 500cc up to 750cc

3.18. **Class I:** over 350cc up to 500cc

3.19. **Class J:** over 250c up to 350cc

3.20. **Class K:** up to 250cc

3.21. **Group VIII:** Electric Propulsion

3.22. **Class 1:** unloaded weight up to 500kg

3.23. **Class 2:** over 500kg up to 1000kg

3.24. **Class 3:** over 1000kg

Chapter 22

Future Regulation Changes

CHAPTER 22 – FUTURE REGULATION CHANGES

The following Appendices apply to this Chapter:

Appendix 1 – General Governance and Establishment (Chapter 1)

Appendix 2 – Judicial (Chapter 2)

Appendix 3 – Organisers (Chapter 3)

Appendix 4 – Championships (Chapter 4)

Appendix 5 – Officials (Chapter 5)

Appendix 6 – Licensing (Chapter 6)

Appendix 7 – Competitor Vehicles and Vehicle Safety Equipment (Chapter 7)

Appendix 8 – Permitted Fuels and Tyres and Testing (Chapter 8)

Appendix 9 – Competitor Personal Safety Equipment (Chapter 9)

Appendix 10 – Circuits and Venues (Chapter 10)

Appendix 11 – Emergency and Medical Services (Units & Equipment) (Chapter 11)

Appendix 12 – Race (Chapter 12)

Appendix 13 – Rally (Chapter 13)

Appendix 14 – Sprint, Hill Climb & Hot Lap Challenge (Chapter 14)

Appendix 15 – Drag Race (Chapter 15)

Appendix 16 – Autocross and Rallycross (Chapter 16)

Appendix 17 – Trials (Chapter 17)

Appendix 18 – Karting (Chapter 18)

Appendix 19 – Autotest (Chapter 19)

Appendix 20 – Cross Country (Chapter 20)

Appendix 21 – Land Speed Records (Chapter 21)

1. Amendments to the following articles have been approved by the Motorsport UK Board for implementation from 01 January 2027.

Appendix 1 - Definitions and Nomenclature

Rally. A **Competition** that may utilise the **Public Highway** and where there is an imposed average speed for **Competitors**, but which does not meet the requirements of a **Classic Reliability Trial**, **Navigational Scatter Event**, **Treasure Hunt** or **Road Safety Rally**. The greatest speed must never form a factor for the **Classification**. All motoring Events utilising the **Public Highway** in England, Scotland or Wales are subject to **Motor Vehicles (Competitions and Trials) Regulations**. A **Rally** will comply with at least one of the following categories and must meet the organisational requirements laid down by the **ASN**. The **Regulations** must clearly indicate the category of **Rally** that is being organised.

~~k. Endurance Road Rally. A Road Rally where a substantial proportion of the Competition takes place on the highway, timed to the minute, and which shall also include Special Tests on private property which may be timed to the second.~~

~~i.~~ k. Trophy Rally. A supplementary Event to a main Rally, which may be provided by Organisers to permit Competitors who retire from the main Event, the opportunity to have further Competition. Vehicles must be rescrutineered for conformity. Competition may only commence at a predetermined time during the Event. These Competitors may run behind the main Event or be re-introduced into their original seeded position, at the Clerk of the Course's discretion. Results should be displayed and awards may be presented. The intention to promote a Trophy Rally must be included within the published Event Regulations.

~~m.~~ l. Practice / Training Rally. A Practice Event may be promoted as a supplementary Event, to permit Competitors who retire from the main Event, the opportunity to gain further experience of their Vehicles. The intention to provide a Practice Event must be included within the published Event Regulations Vehicles must be re-scrutineered for conformity. Competition may only commence at a pre-determined time during the Event. These Competitors may run behind the main Event or be re-introduced into their original seeded position, at the Clerk of the Course's discretion. There will be no results or awards.

~~n.~~ m. Targa Road Rally. A schedule timed rally where the principal Competition comprises the Competitor's performance on Special Tests.

Special Test. A Test, permitted in road Rallies which takes place off the Public Highway in which a Competitor is required to perform a manoeuvre or Series of manoeuvres set by the Organisers. If timed, the Competitor shall not be required to exceed an average speed of 30mph ~~or 40mph for Endurance Road Rallies~~. No benefit shall accrue to any Competitor exceeding the set average speed. Road Rallies with Standard Sections timed to an accuracy of less than a minute may include one Special Test at the start of the itinerary, and one additional Special Test at the same location, which the first Competitor must start no earlier than midnight, and all Competitors must complete before 03:00.

Appendix 2 - Schedule of Penalties and Who May Apply Them

7.10. A **Licence** suspended must be returned immediately to the **ASN**. Where a person or body holds only a digital **Licence**, the **Suspension** will be imposed digitally by the **ASN** and no surrender of a **Licence** is required. Where **Suspension** is imposed by the **Stewards** it shall be surrendered to them where possible, and forwarded by them to the **ASN**.

7.11. For breaches of **App.1 Art.1.1** ~~involving abusive language or behaviour, physical assault or threat of assault~~, the **Clerk of the Course** must hold a **Hearing** and publish a **Decision**, following which they must refer the matter to the **Stewards of the Event.**

7.12. For breaches of **App.1 Art.1.1** and/or **App.1 Art.1.13**, the **Stewards** of the **Event** may, following a Hearing, impose a maximum penalty of a 30-day **Suspension** of the participant's **Competition Licence** where the offence is considered sufficiently serious, in accordance with **Art.3.2 above**. The **Stewards** may also refer the matter to the **ASN** for further consideration, which may include referral by the **ASN** to the **National Court.** ~~If the **Stewards of the Event**, after holding a Hearing, are satisfied that a contravention of **App.1 Art.1.13** was of a serious nature, and the maximum penalty of 30 days is imposed, the matter may also be referred by ASN to the National Court, who may impose a further penalty.~~

7.13. The **Stewards** may refer any matter they consider appropriate to the **ASN**. They may not impose a 30-day **Suspension** for offences other than those under **App.1 Art.1.1** and/or **App.1 Art.1.13**; however, such matters may still be referred to the **ASN** for further consideration of penalty. ~~The **Stewards of the Event** shall consider the evidence provided and if the **Stewards of the Event** are satisfied there are such grounds they shall impose an immediate **Suspension** for a period of 30 days pursuant to **Art.3.2 of this Appendix** and shall refer the matter to the **ASN** respecting **Art.7.10** above.~~

CHAPTER 22 FUTURE REGULATION CHANGES

Appendix 3 – Organisers (Chapter 3)

No regulatory changes have been approved for this Chapter.

CHAPTER 22 FUTURE REGULATION CHANGES

Appendix 4 – Championships (Chapter 4)

No regulatory changes have been approved for this Chapter.

CHAPTER 22 FUTURE REGULATION CHANGES

Appendix 5 – Officials (Chapter 5)

PART A - Licensed Roles

Appendix 18 - Charts

Chart 2

REQUIREMENT FOR EVENTS TO HAVE CERTIFIED TIMING EQUIPMENT

	EVENT STATUS			
	CLUBMAN	**INTERCLUB**	**NATIONAL**	**INTERNATIONAL**
AUTOTEST/ SOLO	NO	NO		
ALL TRIALS	NO	NO		
NAVIGATION RALLY	NO (unless sections timed to less than one minute)	NO (unless sections timed to less than one minute)	NO (unless sections timed to less than one minute)	
ROAD RALLY (incl. TARGA, HISTORIC ~~& ENDURANCE~~)	NO (unless sections timed to less than one minute)	NO (unless sections timed to less than one minute)	NO (unless sections timed to less than one minute)	NO (unless sections timed to less than one minute)
SAFARI, TIME TRIAL, TEAM RECOVERIES, CHALLENGE EVENTS	NO (unless timed to less than one minute)	NO (unless timed to less than one minute)	NO (unless timed to less than one minute)	NO (unless timed to less than one minute)
HILL RALLIES	NO (unless timed to less than one minute)	NO (unless timed to less than one minute)	NO (unless timed to less than one minute)	NO (unless timed to less than one minute)
CLUBCROSS	NO			
AUTOCROSS	NO	NO		
HILL CLIMBS/ SPRINTS		YES	YES	YES
DRAG RACE		YES	YES	YES
RALLYCROSS		YES	YES	YES
STAGE RALLY		YES	YES	YES
KART RACE	YES (unless lap scoring only)	YES (unless lap scoring only)	YES (unless lap scoring only)	YES (unless lap scoring only)
CIRCUIT RACE		YES	YES	YES

CHAPTER 22 FUTURE REGULATION CHANGES

Appendix 6 – Licensing (Chapter 6)

6. Assumed Name

6.1. If **Registration** and a **Licence** is requested under an assumed name or a pseudonym special application must be made at the time of applying for **Registration**. The **ASN** may at its sole discretion issue a **Licence** in such a name, and shall only be permitted where:

a. The applicant provides **ASN** with evidence substantiating a genuine reason for requiring the pseudonym; and

b. The proposed pseudonym must consist of at least two names and be reasonable in the opinion of the **ASN**. Any assumed name must not be likely to deceive or offend.

6.2. A person granted a **Licence** in an assumed name shall not take part in any **Competition** except under the name shown on such **Licence.**

Appendix 6 – Competition Licence Applications, Upgrading, Downgrading and Retention of Licences – Kart

4. Kart - How to Upgrade a Licence

Kart Interclub to Kart National

4.3. A **Competitor** who is qualified to hold a **Kart** Interclub licence may upgrade it to a **Kart** National licence either at renewal or during the year as follows: Obtain the **ASN Steward's** signature on the **Upgrade Card** at ten **Clubman** (prior to 31.12.2019) or **Interclub Kart Races**. One of these signatures may have been obtained at NatSKA or **Kart Clubman Events** held under an **ASN Permit**. A maximum of six signatures may have been obtained at Super K-X Events. ~~Completion of the ARKS Course will constitute one of the ten signatures.~~ Signatures must have been obtained at a minimum of three different venues; a maximum of one Super K-X venue will be counted for upgrading purposes. For **Competitors** in **Race Venue Events** only two different venues are required so long as the application is supported by a **Race Venue Karting Organising Club**. For upgrades containing both **Short Circuit** and **Race Venue Karting** signatures the minimum of three different venues is required. A **Competitor** may only obtain one signature per **Event**.

Annexe A - Licence Eligibility

Chart 2: Competitors Minimum Acceptable Licences

	EVENT STATUS (as defined by Supplementary Regulations			
MOTORSPORT DISCIPLINE	**CLUBMAN**	**INTERCLUB**	**NATIONAL**	**INTERNATIONAL**
AUTOTESTS	RS Clubman	Any Interclub		
ALL TRIALS (including Cross Country)	RS Clubman	Any Interclub		
NAVIGATION RALLY	RS Clubman	Any Interclub	Any National	
ROAD RALLY (including Targa, Historic) ~~and Endurance~~	RS Clubman	Any Interclub	Any National	
SAFARIS, TIME TRIALS, TEAM RECOVERIES, CHALLENGE EVENTS	RS Clubman	Any Interclub	Any National	Cross Country 'ITC-'R' or Stage Rally International 'ITC-'R'
HILL RALLIES	RS Clubman (6)	Any Interclub	RS National (5)	Cross Country 'R' or Stage Rally International 'ITC-'R'
CLUBCROSS	RS Clubman			
AUTOCROSS (including MINICROSS)	RS Clubman	Any Interclub		
HILL CLIMBS, SPRINTS		Any Interclub (6, 12)	RS National or Race National (6)	Speed 'ITD-R' or Race International
DRAG RACES		Any Interclub	RS National - Drag Endorsement	Drag International 'ITD-R'
RALLYCROSS		Any Interclub	RS National or Race National	Off-Road International 'ITC-C' Race International
STAGE RALLIES		RS Interclub - Stage Rally (4)	RS National - Stage Rally (5)	Rally International 'ITC-R'
STAGE RALLIES (HISTORIC)		RS Interclub - Stage Rally (4)	RS National - Stage Rally (5)	Rally International 'ITC-R'
KART ENDURANCE	Kart Clubman (7)			
KART TYRO	Kart Clubman (7)			
KART BAMBINO	Kart Clubman Bambino (9)			
RACE		Race Club	Race National	Race International (10)
RACE HISTORIC		Race Club	Race National	Race International (10)
RACE KART (11)		Kart Interclub or Race Club	Kart National or Race National	Kart International
RACE TRUCK		Race National - Truck Endorsement	Race National - Truck Endorsement	International Truck 'ITC-R'
KART KX & SUPER KX	RS Clubman or KX (13)			

CHAPTER 22 FUTURE REGULATION CHANGES

Appendix 7 – Competitor Vehicles and Vehicle Safety Equipment (Chapter 7)

No regulatory changes have been approved for this Chapter.

CHAPTER 22 FUTURE REGULATION CHANGES

Appendix 8 – Permitted Fuels and Tyres and Testing (Chapter 8)

Appendix 4 - Permitted Tyre Lists

2. Tyres for All Rallies

2.1. For **Rallies**, all tyres used on the **Public Highway** must comply with the relevant **Motor Vehicle Construction and Use Regulations**, in addition to requirements specified in Ch.13 App.15 Art.4 (**Road Rallies**), Ch.13 App.15 Art.13 (**Historic Road Rallies**), ~~Ch.13 App.15 Art.7.15 (**Endurance Road Rallies**)~~, Ch.13 App.16 Art.7 (**Stage Rallies**) and Ch.13 App.17 Art.7 (**Historic Stage Rallies**), and the following regulations.

---

3. Tyres for Road Rallies

~~3.2. For **Endurance Road Rallies** only tyres on List 4 are permitted.~~

~~LIST 4~~

~~**Tyres for Endurance Road Rallies**~~

~~4.16. It is prohibited to re-groove tyres in this list.~~

~~**AVON**~~

- ~~Avanza~~
- ~~CR6ZZ (not Sport or 6751)~~
- ~~Ice Touring~~

~~**COLWAY**~~

- ~~*Road Plus~~

~~**FALCON**~~

- ~~PC523~~

~~**PIRELLI**~~

- ~~190 Snow Control~~

~~**FALKEN**~~

- ~~KK07E (10in)~~
- ~~ZIEX-ZE912~~

~~**FIRESTONE**~~

- ~~F580C~~
- ~~*Multihawk Van~~
- ~~*F580 (Incl. Fuel Saver)~~
- ~~Vanhawk~~

~~**SPORTWAY**~~

- ~~R1~~
- ~~R1+~~

CHAPTER 22 FUTURE REGULATION CHANGES

Appendix 9 – Competitor Personal Safety Equipment (Chapter 9)

No regulatory changes have been approved for this Chapter.

CHAPTER 22 FUTURE REGULATION CHANGES

Appendix 10 – Circuits and Venues (Chapter 10)

No regulatory changes have been approved for this Chapter.

CHAPTER 22 FUTURE REGULATION CHANGES

Appendix 11 – Emergency and Medical Services (Units & Equipment) (Chapter 11)

No regulatory changes have been approved for this Chapter.

CHAPTER 22 FUTURE REGULATION CHANGES

Appendix 12 – Race (Chapter 12)

Appendix 11 – Pit and Paddock Regulations

3. General

3.6. Whilst in the pit lane:

* indicates maximum figures that may be reduced in the Official Documents

c. *the maximum pit lane speed limit is 60kph /37.2 mph.

d. it is recommended that all personnel wear a reflective high visibility jacket/vest approved by the Organisers and recommended in compliance with EN ISO 20471 and EN ISO 14116 Index 1 standards. From 30 minutes after sunset through to sunrise a reflective high visibility jacket/vest is mandatory.

e. *there must be no more than 3 people on the pit wall, per Vehicle.

f. *there must be no more than 4 people working on the Vehicle at any one time.

g. all equipment and personnel must be in the pit garage when the relevant Vehicle is not making a pit stop with the exception of pit signallers. Where there are no garages arrangements must be approved in advance with the ASN.

h. no work may take place on the Vehicle during refuelling and the engine must be switched off

i. it is the responsibility of the Entrant to release their Vehicle after a pit stop only when it is safe to do so. Vehicles in the fast lane have priority over those leaving the working area

---

Appendix 13 – Competitors Vehicles Technical Regulations

11.13. It is mandatory for an operational FIA Impact Data Recorder (IDR) to be fitted to all **Vehicles** ~~competing in British, National status and Junior Championships.~~ IDRs must be installed ~~as per~~ and operated in accordance with the manufacturers' instructions. Each IDR must be uniquely assigned to, and used only in, the individual Vehicle in which it is installed.

CHAPTER 22 FUTURE REGULATION CHANGES

Appendix 13 – Rally (Chapter 13)

Appendix 3 - Specific Regulations for Road Events

~~**11. Endurance Road Rally**~~

~~11.1. A **Road Rally** where a substantial proportion of the **Competition** takes place on the **Public Highway** timed to the minute and which shall also include **Special Tests** on private property which may be timed to the second.~~

11. All Events

11.1. ~~**Road Safety Event**s and any other form of **Event** that use the **Public Highway**~~ All **Event** types detailed in **Arts.2 – 10 above** inclusive, and in **Ch.13 App.6** must comply with the following:

a. Must not include any **Special Stage**s.

b. Except for **Road**, **Historic Road**, **Enduro**, **Targa** and **Navigation Rallies** they must not include any **Special Tests**.

c. **Competitor**s must not carry any form of Intercom (ie any method of voice amplification) or any radio transmitting device. Exceptionally mobile telephones are **Permitted** if the **Official Document**s specifically allow them. Failure to conform will be penalised by **Disqualification** from the **Event**.

d. No regular assistance organised in advance may be used by **Competitors** ~~in **Rallies** defined in **Arts.2 above** inclusive~~ except when **Permitted** in the **Official Documents** for **Vintage** or **Veteran Event**s or **Targa Road Rallies** taking place at a **Single Venue**.

e. No assistance may be expected from the **Organisers**.

f. **Competitor**s are responsible for ensuring that they are supplied with fuel, oil, water etc. even though the **Organiser**s may advise where these supplies may be obtained.

g. A **Vehicle** may not be moved other than by its own power except:

   i. By a ferry.

   ii. By outside means for a minimum distance necessary to extricate it from difficulty.

   iii. By gravity.

   iv. By its crew.

h. **Competitor**s are strongly recommended to carry a **First Aid Kit**, high visibility vests or jackets and a torch.

i. Other than for Targa Road Rallies, where **App. 11C Art.2.2** applies, the use of in car cameras is forbidden. Breach of this **Regulation** will result in **Disqualification** from the **Event**. Any **Competitor** found to be in breach must be reported to the **ASN** by the **Clerk of the Course** for consideration of further disciplinary action. The sharing, broadcasting or any other form of dissemination of in car video footage of road rallies will be considered as an aggravating factor when considering further penalties.

j. **Organisers** must not sanction encourage or facilitate the filming of **Events** taking part on the **Public Highway**.

k. **Organisers** may only use arrows to define junctions on **Standard** or **Regularity Sections** on the **Public Highway** where it is necessary to do so to prevent **Competitors** passing sensitive areas, or locations where issues have been raised during pre-**Event** PR work.

l. It is not permitted for **Organisers** to require **Competitors** to drive through any type of building or similar structure on a **Special Test**, **Standard** or **Regularity Section**.

Appendix 4 - Road Events – Routes and Sections

6.7. May only be included in the following rallies as defined by **Permit**:

a. **Historic Road**

~~b. **Endurance Road**~~

b. **Targa Road**

c. **Navigation**

d. **Veteran**

e. **Vintage**

f. **Economy**.

Appendix 4 - Road Events – Routes and Sections

8. Special Tests

8.2. These tests must be designed so that no **Competitor** can be expected to exceed an average speed of 30mph ~~or 40mph for **Endurance Road Rallies**~~.

Appendix 7A - Road Scheduled Time Events

1. Summary of Penalties to be Applied on Scheduled Timed Events

		Time	Fails
(a)	*Not reporting or reporting **OTL** at a **Main Time Control***	*Retired*	
*(b)	Not reporting or reporting **OTL** at any other **Time Control**	30 minutes	1 Fail
*(c)	Not complying with the **Route Card** including visiting a **Control** more than once	15 minutes	1 Fail
*(d)	Not reporting at **Passage Control** or providing proof of visiting a **Route Check**	5 minutes	1 Fail
*(e)	Arrival before scheduled time at the end of a **Standard Section**	2 minutes per minute	
*(f)	Arrival after due time at the end of a **Standard Section**	1 minute per minute	
*(g)	Arrival before due time at the end of a **Neutral Section**	30 minutes	1 Fail
**(h)	Arrival before due time at an **Intermediate Control** or **Finish Control** of a **Regularity Section**	Actual time early	
*(j)	Arrival after due time at an intermediate control or finish control of a **Regularity Section**. Exceptionally at a single intermediate or finish control of a **Regularity Section** held between 07.00 and 22.00hrs this penalty may be reduced.	Actual time late	
*(k)	Breach of any statutory requirement concerning the use of a motor vehicle	30 minutes	1 Fail

(l)	Contravention of App.5 Art.5.19 *First Offence	30 minutes	1 Fail
	Second Offence	*Disqualified*	
(m)	Excessive speed or driving likely to bring motor sport into disrepute	*Disqualified*	
(n)	Excessive **Noise**	*Disqualified*	
(o)	Receiving assistance contrary to App.3 Art.~~12.1.d~~ 11.1.d	*Disqualified*	
(p)	Breach of App.3 Art.~~12.1~~ 11.1 (intercoms); App.15 Art.6.6 (Registration Plates)	*Disqualified*	
(q)	Breach of App.4 Arts.2.5–2.8 **inclusive;** App.5 Arts.6.2 and 6.3; App.9 Arts.4	*Disqualified*	

Appendix 7B - Road Scheduled Time Events

1. Summary of Penalties to be Applied on Scheduled Timed Historic Road Rally Events

		Time	Fails
**(a)	Not reporting or reporting **OTL** at a Main **Time Control**	15 minutes	
*(b)	*Not reporting or reporting **OTL** at any other **Time Control***	1 minute	1 Fail
*(c)	*Not complying with the **Route Card** including visiting a **Control** more than once*	1 minute	1 Fail
*(d)	*Not reporting at **Passage Control** or providing proof of visiting a **Route Check***	1 minute	1 Fail
*(e)	*Arrival before scheduled time at the end of a **Standard Section***	1 minute per minute	
*(f)	Arrival after due time at the end of a **Standard Section**. If a standard section is held totally on private land the final control can be timed to the second	15 seconds per minute	
*(g)	Arrival before due time at the end of a **Neutral Section**	30 minutes	1 Fail
**(h)	Arrival before due time at an **Intermediate Control** or **Finish Control** of a **Regularity Section**	Actual time early	
*(j)	Arrival after due time at an intermediate control or finish control of a **Regularity Section**. This may be capped at 1 minute. Exceptionally at a single intermediate or finish control of a **Regularity Section** on each leg this penalty may be reduced.	Actual time late	
*(k)	Breach of any statutory requirement concerning the use of a motor vehicle	30 minutes	1 Fail
(l)	Contravention of App.5 Art.5.19 *First Offence	30 minutes	1 Fail
	Second Offence	*Disqualified*	
(m)	*Excessive speed or driving likely to bring motor sport into disrepute*	*Disqualified*	
(n)	*Excessive sound*	*Disqualified*	
(o)	*Receiving assistance contrary to App.3 Art.~~12.1.d~~ 11.1.d*	*Disqualified*	
(p)	*Breach of App.3 Art.~~12.1~~ 11.1 (intercoms); App.15 Art.6.6 (Registration Plates)*	*Disqualified*	
(q)	*Breach of App.4 Arts.2.5–2.8 inclusive; App.5 Arts.6.2 and 6.3; App.9 Arts.4*	*Disqualified*	

Appendix 9 - Competitors Regulations including Licensing

5.3. ~~For **Endurance Road** and~~ **Targa Road Rallies** rally plates must be displayed at the front or rear of the **Vehicle** and 2 x numbers for each rear side window which shall be 15cm high with a stroke width of at least 15mm coloured orange or yellow and may be reflective. These numbers shall be in place at the top of the rear side windows (or equivalent space on two-seater **Vehicles**).

Appendix 15 - Technical Regulations - Road, ~~Endurance~~ and Historic Road Rally Cars

2. Body

2.7. ~~The trim including the rear seat may be cut to allow the fitting of a safety cage.~~ If a Roll Over Protection System (ROPS) is fitted:

a. All aspects of the design and installation should be in compliance with **Ch.7 App.3.**

b. Trim including the rear seat may be cut to allow the ROPS to be fitted.

c. Padding must be fitted to any part of the ROPS which the **Driver** or **Navigator**'s bodies or heads could come into contact with.

3. Engines and Transmissions

3.1. All **Vehicle** engines must have:

a. A maximum of four cylinders.

b. A maximum displacement of 2100cc.

c. A cylinder block of the same material and configuration as the original.

d. Appropriate means by which to be sealed in accordance with **Ch.7 App.12 Art.1.9.**

3.2. Engines with one camshaft per bank of cylinders may be used providing that:

a. They have a maximum of two carburettor chokes (two single or one double).

b. Fuel injection may be fitted where it was standard equipment by the manufacturer for that engine type and where the original inlet manifold and throttle body are retained unmodified for that engine type.

3.3. Engines with more than one camshaft per bank of cylinders may be used providing that:

a. They were originally fitted with fuel injection ~~and~~.

b. The fuel injection system complete with inlet manifold and throttle body is retained unmodified except as permitted in ~~**Art.3.3.e**~~ **Art.3.4c below**.

c. Any replacement engine comprises a block and cylinder head from the same engine family.

3.4. In respect of ~~**Art.3.2**~~ **Art 3.3 above** it is permitted to make the following modifications to effect installation:

a. Alternative engine mountings, sump pan and exhaust manifolds.

b. Relocation of ancillaries such as alternators and steering pumps.

c. To change the orientation of the original and otherwise unmodified inlet manifold provided it is fitted directly to the cylinder head without the addition of an intermediate adapter device. It is not permitted to fit an aftermarket inlet manifold, or an inlet manifold which was fitted to a similar engine in a different make or model of Vehicle.

3.5. For diesel and petrol engines under 1500cc actual capacity forced induction is permitted providing that the complete original induction system is retained unmodified other than the replacement of the air filter

element.

~~3.5. Fuel injection may be fitted where it was standard equipment by the manufacturer for that engine type and where the original plenum chamber and throttle body is retained for that engine type.~~

3.6. ~~A standard Wankel unit will be considered as three cylinders. Twin Wankel units are prohibited.~~ Rotary engines are prohibited.

3.7. ~~Engines must comply with the silencing **Noise** levels and have induction air filter elements fitted that ensure the vehicle complies with noise regulations.~~ Engines must have induction air filter elements and exhaust silencers fitted that ensure the **Vehicle** complies with noise regulations established in **Ch.13 App.1 Art.7** at all times.

3.8. Only H shift pattern manual transmissions or standard equipment automatic transmissions in their original configuration are permitted. The gear lever must remain the only means of changing gear unless an alternative method was originally fitted by the vehicle manufacturer as standard. ~~Automatic transmissions are permitted provided that they are in their original configuration as fitted by the manufacturer to that specific **Vehicle** model.~~ and is retained unmodified.

3.9. The number and location of the driven wheels must remain as original to the model of **Vehicle.**

4. Wheels and Tyres

4.1. ~~Wheels and tyre sizes are free but must fit within the standard unmodified wheel arch.~~ All wheels and tyres fitted to a **Vehicle** must fit within the standard, unmodified external wheel arch profile.

4.2. The following wheel and tyre size restrictions apply:

Wheel Diameter	Max. Wheel Rim Width	Max. Tyre Width
Up to 13”	6”	185mm
14”	6.5”	195mm
15”	7”	205mm
16” and above	8”	225mm

4.3. **Vehicles** fitted as standard with wider wheel rims or tyres than those stated in the table in **Art. 4.2 above** may use their original manufacturer-supplied wheels. It is not permitted to use a larger wheel size (diameter and/or width) than that which was originally supplied as standard by the manufacturer for the make and model of **Vehicle**.

4.4. **Vehicles** must be fitted with tyres that are always legal for use on the **Public Highway.**

4.5. Tyres must comply with **Ch.8 App.4 Arts.2–3**

~~4.4. **Vehicles** must have all spare wheels securely fastened in position and must not be fitted with spiked or studded tyres or any non-skid attachments other than chains if permitted by the **Official Documents.**~~

4.6. **Vehicles** must not be fitted with spiked or studded tyres or any non-skid attachments other than chains if permitted by the **Official Documents.**

4.7. A maximum of two spare wheels may be carried in competing **Vehicles**. All spare wheels must be securely fastened in position.

5. Electrical Systems

5.6. Auxiliary lamps ~~unless fitted by the manufacturer as standard equipment~~ using gas discharge or LED technology are not permitted unless fitted by the manufacturer as standard equipment, and gas discharge or LED headlamp units may not be retro-fitted. The maximum voltage rating of any auxiliary lamps must not exceed 12v. It is expressly prohibited to use 24v auxiliary lamps.

5.9. **Vehicles** must have all lights fitted and used according to **Motor Vehicle Lighting Regulations** to comply with construction and use, with the following restrictions on reversing lights:

a. It is not permitted to add additional reversing lights to Vehicles which were fitted with such lights as standard equipment.

b. Unless fitted as standard equipment, it is not permitted to use LED type bulbs in reversing lights.

c. Where it is necessary to fit reversing lights as required by law to a **Vehicle** not equipped with them as standard, only incandescent type lamp units may be fitted.

d. Reversing lights must be extinguished when the **Vehicle** is travelling forwards in accordance with the Road Vehicles Lighting Regulations 1989.

6. Miscellaneous

6.3. **Vehicles** must use **Permitted Fuel** as defined in Ch.8 App.1 **Art.1.7 a, c, or d.**

6.7. ~~Where an **Event** includes any **Section** or **Special Test** held wholly or in part on private property all **Vehicles** must carry a **Small Spill Kit** complying with the **NCR** and which is recommended for events held wholly on the **Public Highway.**~~ For **Road Rallies** and **Targa Road Rallies**, **Competitors** are required to carry a **First Aid Kit**, high visibility vests or jackets, OK/SOS board, **Small Spill Kit**, warning triangle, combined seat belt cutter / window glass hammer, and for **Events** run during the hours of darkness a torch. It is recommended that all **Competitors** carry a fire extinguisher that is positioned and secured appropriately. All items in this Article are strongly recommended but not mandatory for all **Navigation Rallies**.

~~7. ENDURANCE ROAD RALLY~~ Deleted

~~7.1. In addition to Arts. 1 – 6.8 these **Vehicles** must comply with the following Arts.7 inclusive.~~

~~7.2. Standard production specification engines limited to 1400cc naturally aspirated petrol, 2000cc naturally aspirated diesel and 1400cc forced induction diesel are permitted.~~

~~7.3. The exhaust system is free but must retain the original exhaust manifold.~~

~~7.4. Where originally fitted with a catalytic converter the standard part must be retained.~~

~~7.5. The transmission must be as originally fitted to the model of vehicle.~~

~~7.6. Any changes to the gearbox or final drive are prohibited.~~

~~7.7. The suspension type and mountings must remain the same as that fitted by the manufacturer.~~

~~7.8. The shock absorbers may be of any make and may be uprated from standard.~~

~~7.9. Adjustable spring platform struts are permitted. The mounting method and position must remain as specified by the manufacturer.~~

~~7.10. Springs are free but must retain their original location.~~

~~7.11. Bushes may be changed for similar polymer materials but rose-joints or similar metal joints are prohibited.~~

~~7.12. Vehicles must be fitted with rollover protection of a minimum conforming to Ch.7 App.13 Diagram 10 and seat belts conforming to Ch.7 App.7 Art.9.4 – 9.6. Sunroofs must either be fitted with safety film conforming to Ch.7 App.2 Arts.22.7 – 22.8 or comply with Ch.12 App.13 Art.11.8.~~

~~7.13. Brake fluid pads and linings and stone protection are free.~~

~~7.14. For daylight **Endurance Road Rallies** it is permitted to fit a sunstrip of no more than 90mm deep which may display the manufacturer's make or model or the name of the **Event** or a recognised Motor Club or a registered national charity provided that this does not affect the **Driver's** view.~~

~~7.15. Must use tyres from Ch.8 List 4.~~

~~7.16. All vehicles must carry a **Small Spill Kit** complying with the **NCR.**~~

11. Recommended Classes

11.3. The **ASN** may also grant discretionary waivers for **Historic Road Rally Cars** complying with **Art.9.2 above** in respect of ~~**Arts.3.1–3.4 above**~~ **Arts.3.1.a, 3.1.b and 3.2.a above** as appropriate for **Road Rallies** and **Rallies** with **Special Tests** held between 07.00 and 22.00hrs providing an **Historic Grade Eligibility Scrutineer** is appointed.

13. Wheels Tyres and Brakes

~~13.8. For **Vehicles** in Categories 2 or 3 or 4 Art.13.6 does not apply where OE specification tyre aspect ratios are less than those specified therein.~~

14. Miscellaneous

14.1. **Vehicles** must not use racing style numbers nor carry advertising other than event sponsor decals. ~~**Permitted Fuel** must be used as defined in Ch.1 App.1 **(Nomenclature and Definitions).**~~

14.2. **Vehicles** must use **Permitted Fuel** as defined in **Ch.8 App.1 Art.1.7 a, c, or d.**

14.3. **Historic Road Rally Cars** complying with **Art.9.2 above** are exempt from the requirement of **Art.2.7.a**, provided **Event Scrutineers** are satisfied that any such installation does not adversely affect the safety of the **Vehicle**.

Appendix 16 - Special Stage Rally Cars

12.15. It is mandatory for an operational FIA Impact Data Recorder (IDR) to be fitted to all **Vehicles**. IDRs must be installed and operated in accordance with the manufacturers' instructions. Each IDR must be uniquely assigned to, and used only in, the individual **Vehicle** in which it is installed.

CHAPTER 22 FUTURE REGULATION CHANGES

Appendix 14 – Sprint, Hill Climb and Hot Lap Challenge (Chapter 14)

Appendix 2 - Competitors Regulations

4. Drivers

4.3. **Competitors** are required to wear flame-resistant gloves and shoes (see **Ch.9 Art.12.5-6**) with the exception of **Standard Cars** and **Road Cars** where their use is recommended. The use of a flame-resistant balaclava (**Ch.9 Art.12.3**) is mandatory with the exception of open bodywork **Period Defined Vehicles (Non-Rally) A-D, Standard Cars** and **Road Cars** where their use is recommended. For all categories the wearing of flame-resistant socks (**Ch.9 Art.12.4**) and underwear (**Ch.9 Art.12.2**) is strongly recommended.

4.3.1 For **Period Defined Vehicles, Standard Cars** and **Road Cars** suitable shoes must be worn which cover the foot and allow for adequate control of the vehicle at all times. Plastic shoes (such as trainers) should be avoided.

CHAPTER 22 FUTURE REGULATION CHANGES

Appendix 15 – Drag Race (Chapter 15)

No regulatory changes have been approved for this Chapter.

CHAPTER 22 FUTURE REGULATION CHANGES

Appendix 16 – Autocross and Rallycross (Chapter 16)

PART B (RALLYCROSS)

Appendix 6 - Organisers Regulations

8. Signals

8.11. Where a **Driver** in a **Heat** or **Final** causes a re-run the **Driver** concerned may be **Disqualified** from the results.

~~8.12. All other incidents will be treated as "**Force Majeure**".~~

Appendix 10 - Technical Regulations

12. Miscellaneous

12.11. **Vehicles** must have:

a. Internal bonnet locks removed and external positive locking fasteners fitted.

b. Steering column locks rendered inoperative.

c. Towing eyes of adequate strength and size fitted front and rear. These should be painted a contrasting bright colour.

d. An operational FIA Impact Data Recorder (IDR) fitted. IDRs must be installed and operated in accordance with the manufacturers' instructions. Each IDR must be uniquely assigned to, and used only in, the individual Vehicle in which it is installed.

CHAPTER 22 FUTURE REGULATION CHANGES

Appendix 17 – Trials (Chapter 17)

Appendix 1 – Organisers Regulations

7. General Regulations

1.6. Special attention should be paid to the following:

a. Every practicable precaution must be taken to avoid depositing mud or soil on the **Public Highway** when leaving private property.

b. Warning notices as required by **Chapter 3 App 3** must be displayed.

c. The beginning and end of observed sections must be marked by signs.

d. The starts of sections should be reasonably flat and wide so that all **Competitors** can at least enter the section.

e. The layout of sections should ensure that areas can be marshalled by the minimum possible number of **Officials**.

f. Sections should be of a winding nature so as to place a premium on driving skill, although the radius of all corners must be adequate for all cars entered.

g. If possible alternative routes should be planned in case of a change of weather conditions and toprovide varied routes within sections for different classes.

h. Metal rod markers should not be used.

i. Markers should be placed to avoid the likelihood of **Competitors** putting four wheels out between markers and where they are unlikely to be moved by bushes or branches.

j. Clearly visible sub-section numbers should have a minimum figure height of 50mm.

k. Sub-section markers should be closely grouped in areas of expected failure.

l. **Organisers** should be aware of the nearest hospital and the best route to get to it in case of incident.

m. When **Competitors** under 17 years of age are allowed to compete **Organisers** should note the information in **Appendix 2** 'Crew' and **Chapter 6**: regarding Minimum Ages.

n. No person under the age of 14 can act as a marshal or assistant marshal unless under the constant supervision of a marshal over 18 years old.

o. At single site **Events** a Medium sized **Spill Kit** must be available at each section or group of adjacent sections.

p. At **Events** which utilize the public highway each **Vehicle** must carry a **Small Spill Kit** as defined in **Chapter 1 App 1**.

q. At single site **Events**, **Organisers** must provide at each section a minimum of one fire extinguisher of at least 6kg capacity, suitable for extinguishing **Vehicle** fires. Where sections are closely grouped one extinguisher located at a clearly visible central point is permitted.

Appendix 1 – Organisers Regulations Classic Reliability Trials

2.23. Observed sections may not be more than a quarter of a mile long and no special time schedule may be applied from start to finish of a section more than 200m long (an Observed Test).

Appendix 2 – Competitor Regulations

2. The Crew

2.2. ~~'Bouncing' will be permitted only within the confines of the seating compartment and then only so long as no portion of either the Driver's or Passenger's body other than arms and hands is placed outside the sides of the car or behind the seat they are occupying.~~

Appendix 2 – Competitor Regulations

5. Results

5.4

h. **Driver** and/or Passengers not seated in accordance with **Art**~~2.2 above~~**s 7, 11** or **15 below**

Appendix 2 – Competitor Regulations

7. Classic Trials - The Crew

7.1. Passengers must be properly seated i.e. both the **Passenger** and the seat back must be upright and facing forward.

7.2. 'Bouncing' will be permitted only within the confines of the seating compartment and then only so long as no portion of either the **Driver**'s or **Passenger**'s body other than arms and hands is placed outside the sides of the **Vehicle** or behind the seat they are occupying.

7.~~2~~3. Where the **Driver** is over 17 years old and holds a full **RTA Licence** the **Passenger** must fulfil the minimum age requirement below.

Open or Convertible Vehicles 14

Saloons or hardtop Vehicles 12

7.~~3~~4. If **Art 2.1** is varied entries may be accepted from Drivers aged 16 or from Drivers of 17 or over who do not hold a full **RTA Licence**. In such cases the **Driver** must be accompanied by a **Passenger** who holds a full **RTA Licence** and is experienced as a **Driver** of **Classic Trials** to the satisfaction of the **Clerk of Course**. Any such **Driver** may only attempt sections wholly on private land.

7.~~4~~5. Additionally the rear seats of saloon cars can be occupied by the number of people for whom they were designed. Passengers who occupy the rear seats of the **Vehicle** must not be less than 2 years of age any child under 12 years of age or 135cm in height must be seated using an approved 'child restraint'.

7.~~5~~6. Passengers aged between 2 and 12 years old will be signed on by their parent or guardian.

7.~~6~~7. Passengers are not required to occupy the front seat where suitable rear seats are available unless the **Official Documents** state otherwise. All Passengers in a vehicle with a soft-top or no roof must be at least 14 years of age. However in Class 8 only one **Passenger** is allowed who must occupy the seat alongside the **Driver**.

7.~~7~~8. Members of the crew at the **Start** cannot be varied during an **Event** except with Official approval.

Appendix 2 – Competitor Regulations

11. Car Trials - The Crew

11.1. During all **Observed Sections** and tests the seat alongside the **Driver** must be occupied.

11.2. If a **Passenger** is carried they must be properly seated i.e. both the **Passenger** and the seat back must be upright and facing forward and:.

r. ~~Where the Driver is over 17 years old and holds a full RTA Licence the Passenger must be of at least 12 years of age.~~

s. ~~Entries may be accepted from Drivers aged 14 15 or 16 or from Drivers of 17 or over who do not hold a full RTA Licence. In such cases the Driver must be accompanied by a Passenger who holds a full RTA Licence and is experienced as a Driver of Car Trials or Sporting Trials to the satisfaction of the Clerk of Course.~~

11.3. 'Bouncing' will be permitted only within the confines of the seating compartment and then only so long as no portion of either the **Driver**'s or **Passenger**'s body other than arms and hands is placed outside the sides of the **Vehicle** or behind the seat they are occupying.

11.2~~a~~4. Where the **Driver** is over 17 years old and holds a full **RTA Licence** the **Passenger** must be of at least 12 years of age.

11.2~~b~~5. Entries may be accepted from **Drivers** aged 14 15 or 16 or from **Drivers** of 17 or over who do not hold a full **RTA Licence**. In such cases the **Driver** must be accompanied by a **Passenger** who holds a full **RTA Licence** and is experienced as a **Driver** of **Car Trials** or **Sporting Trials** to the satisfaction of the **Clerk of Course**.

11.3~~6~~. Additionally the rear seats of saloon cars can be occupied by the number of people for whom they were designed. **Passengers** who occupy the rear seats of the **Vehicle** must not be less than 2 years of age any child under 12 years of age or 135cm in height must be seated using an approved 'child restraint'.

11.4~~7~~. Passengers aged between 2 and 12 years old will be signed on by their parent or guardian.

11.5~~8~~. Members of the crew at the **Start** cannot be varied during an **Event** except with **Official** approval.

Appendix 2 – Competitor Regulations

15. Sporting Trials and Historic Sporting Trials – The Crew

15.1. During all **Observed Sections** and tests the seat alongside the **Driver** must be occupied by a **Passenger** who must be ~~properly seated i.e. both the Passenger and the seat back must be upright and~~ facing forward. The **Passenger**'s hips must be located within the cockpit and on or in front of the rear axle line (**Penalty** as per **Art 5.4.h**).

15.2. Sitting on the rear of the seat or on the area behind the seat is not permitted. The **Passenger** should have a firm grip on at least one handle (Location of which is defined in **App.5 Art.4** and **App.6 Art.5** accordingly). No part of a Competitor's body shall be behind the spare wheel.

15.2~~3~~. Where the **Driver** is over 17 years old and holds a full **RTA Licence** the **Passenger** must be of at least 14 years of age.

15.3~~4~~. Entries may be accepted from **Drivers** aged 16 or from **Drivers** of 17 or over who do not hold a full **RTA Licence**. These **Drivers** must be accompanied by a **Passenger** who holds a full **RTA Licence** and is experienced as a **Driver** in **Sporting Trials** and who must produce a valid **Club Membership Card**.

15.4~~5~~. Members of the crew at the **Start** cannot be varied during an **Event** except with **Official** approval.

Appendix 3 – Technical Regulations - Classic Reliability Trial Vehicles

1. General

Class Description

5.

a. Front-engined production sports cars (except **Vehicles** in Classes 1, 6 and 90).

b. **Vehicles** in full HST Historic **Class** specification with fiddle brakes disabled.

c. Non-production cars built mainly from pre-1941 components (except **Vehicles** approved for **Class** 2) individually approved. Such **Vehicles** may include some post war components including BMC A-Series engines up to 948cc, Reliant OHV engines, A Series Rear Axles, Ford 105E Series Back Axles, Tubular Frame **Chassis**. These **Vehicles** must have at least one operational European carburettor and run on tyres satisfying **Art 7.~~13~~12** (Crossplies).

Appendix 3 – Technical Regulations - Classic Reliability Trial Vehicles

3. Chassis / Body

3.2. In particular **Vehicles** must:

c. For production cars any extensions must not exceed the overhang proportions of a non-production car. Any additional spare wheel carrier should be fitted as close as possible to the body and satisfy **Arts.~~7.9-7.12~~7.8–7.11** Production cars need not comply with **Ch.7 App.2 Art.6** in respect of bonnets.

Appendix 3 – Technical Regulations - Classic Reliability Trial Vehicles

7. Wheels and Tyres

~~7.6. No tyre may be smaller than that recommended by the car manufacturer.~~

7.~~7~~6. Standard tyres must be used and all types of Grip and Town & Country block patterns are prohibited. Radial tyres with a maximum tread gap exceeding 8mm are prohibited. A tyre will be deemed to have a block gap not exceeding 8mm if when fitted to a rim and inflated to 25psi an 8mm round bar will stick in the gap when horizontal. Purely circumferential gaps may be ignored.

7.~~8~~7 In all Classes spare wheels must be firmly secured by a permanent fixing.

7.~~9~~8. Not more than two spare wheels may be carried externally and these must be fitted as close as possible to the bodywork (excluding bumpers).

7.~~10~~9. No part of the spare wheel(s) may be mounted externally in front of the windscreen unless in the manufacturers standard position or on the roof.

7.~~11~~10. Vehicles with an external rear-mounted spare wheel in the manufacturers standard position may add a second spare wheel mounted flush with the original wheel with no spacer.

7.~~12~~11. The spare wheel(s) or mounting(s) may not extend rearwards more that 200mm from a vertical line passing through the rearmost part of the original bodywork (excluding bumpers) or more than 100mm beyond the rearmost part of the original bumper position for the model of **Vehicle** whichever creates the lesser protrusion. An alternative maximum dimension not exceeding 400mm may be included in an accepted

specification for a car in Class 7(c).

7.~~13~~12. **Class** 2 Vehicles must use cross-ply tyres (which need not be listed in **Ch.8 App.4** Lists 1 or 2 but which must not be of Grip Town & Country or Dual Purpose pattern).

Appendix 4 – Technical Regulations - Car Trials Formula

3. Safety

3.1. Vehicles must comply with Construction and Use Regulations and be fitted with safety belts if appropriate. The following are recommended:

a. Safety roll-over bar to safety criteria **Ch.7 App.3 Art.22.**

b. The wearing of seat belts is optional when fitted to the **Vehicle**.

~~c.~~ 3.2. At single site Events handheld fire extinguishers to a level of safety ~~criteria~~ specified in **Ch.7 App.6 Art.3.** are recommended and which are accessible to the crew (note a 1.75ltr minimum for AFFF or 2x1ltr AFFF or 2x1kg Powder is permitted).

3.3. At Events which utilise the public highway handheld fire extinguishers to a level of safety specified in **Ch.7 App.6 Art.3.** are mandatory and which are accessible to the crew (note a 1.75ltr minimum for AFFF or 2x1ltr AFFF or 2x1kg Powder is permitted).

Appendix 4 – Technical Regulations – Car Trials Formula

5. Engine

5.2. If forced induction is used, no ~~the~~ coefficient will apply ~~be 1.4:1~~ unless specified in the **Official Documents**.

CHAPTER 22 FUTURE REGULATION CHANGES

Appendix 18 – Karting (Chapter 18)

Appendix 2 - Kart Race Circuits General

3. Grading

3.1. **Track Licences** will be graded as follows:

c. All status **Events** up to and including **International.**

d. All status **Events** up to and including **National.**

e. for **Interclub Events** only.

f. For **Bambino Events.** A specific endorsement must be detailed~~s~~ on the **Track Licence** to **Permit** these **Events.**

3.2. If a **Race Venue Track** incorporates a **Short Circuit Kart Track** those **Tracks** will be subject to individual grading and **Track Licences.**

5. Minimum Number of ASN Permitted Events to renew a Short Circuit Kart Track Licence

5.1. All **Short Circuit Kart Tracks** must achieve the below minimum number of **ASN Permitted Kart Events** to obtain a **Track Licence** unless otherwise approved by the **ASN**:

a. All **Short Circuit Kart Tracks** graded as **National** must achieve a minimum of 5 **ASN Permitted Kart Events** in the previous calendar year to be eligible to renew for **National** status the following year.

b. All **Short Circuit Kart Tracks** graded as **Interclub** must achieve a minimum of 4 **ASN Permitted Kart Events** in the previous calendar year to be eligible to renew for Interclub status the following year.

c. For **Bambino Events** a specific endorsement must be detailed on the **Track Licence** for the **Track** to be eligible to **Permit** these **Events**.

Appendix 7 - Competitors Regulations including Personal Clothing and Licences

2.11. Breaches of **Art.2.6** may be penalised as follows:

a. In qualifying the fastest lap ~~lap on which the breach occurred should~~ will be disallowed. Note should be made on the result sheet of any times disallowed.

b. Any further breaches will result in additional fastest lap(s) being disallowed.

CHAPTER 22 FUTURE REGULATION CHANGES

Appendix 19 – Autotest (Chapter 19)

No regulatory changes have been approved for this Chapter.

CHAPTER 22 FUTURE REGULATION CHANGES

Appendix 20 – Cross Country (Chapter 20)

No regulatory changes have been approved for this Chapter.

CHAPTER 22 FUTURE REGULATION CHANGES

Appendix 21 – Land Speed Records (Chapter 21)

No regulatory changes have been approved for this Chapter.

Directory

Motorsport UK Directory 2026

38th Edition

The Motorsport UK Directory, now in its 38th year of publication, has several categories to choose from with more than 86 individual entries. It is available online at motorsportuk.org.

© The contents of this book are copyright and must not be reproduced without prior consent of Motorsport UK.

Category	Page	Category	Page
Airport Parking	809	Helmets	813
Car Rental	809	Hotels	813
Charities	809	Insurance	814
Control Fuels	809	Karting	815
Dash Cams	809	Motorsport Race Circuits	815
Data Logging	810	Motorsport Products	815
Driver Coaching	810	Oil Companies	816
Esports	810	Retail	816
Ferry Travel	811	Roll Bars/Cages	816
FHR Systems	811	Seatbelts	817
Fire Extinguishers	811	Seats	817
Food & Beverage	812	Subscriptions	817
Fuel Analysis	812	Suspension	818
Fuels	812	Tools	818
Health & Safety	813	Tyres	818
Hearing Protection	813	Wheels	819

The Motorsport UK Directory is compiled by Motorsport UK. Motorsport UK has not tested the products, equipment or services listed. These listings do not imply any form of endorsement (with the exception of the ARDS Racing Schools, ARKS Kart Schools, BARS Rally Schools and AHASS Hillclimb Schools).

Every care is taken to ensure the directory is accurate and up to date.

Visit motorsportuk.org, the official website of Motorsport UK, for information on all activities and events.

Airport Parking

APH

Tel: 01342 859536
Web: www.aph.com

Motorsport UK members receive great discounts off APH prices at all participating airport car parks throughout the UK.

Car Rental

AVIS

Web: www.avis.co.uk

Avis believe that car rental is about more than getting from A to B. It's about the journey itself; the experiences you have along the way and the cars you can explore in. Rent a car with Avis and enjoy quality service anywhere you go.

Whether you want to visit the main attractions or find those hidden gems only accessible by car, with more than 5,000 car rental locations across the UK, Europe and worldwide, with Avis you truly can choose a more inspiring journey.

Charities

BRDC Motor Sport Charity

Web: www.brdc.co.uk/BRDC-Motor-Sport-Charity

Founded in 2000, the charity exists to support Members and people involved in the motor sport industry in times of need.

The charity supports competitors, marshals, officers, employees at motorsport venues and those involved in the design, construction, testing, repair and supply of parts for vehicles intended for competition use.

British Motorsport Trust

Web: https://britishmotorsporttrust.org

Creating a safer sport, empowering our people to perform at the highest level and providing them with the equipment and tools to succeed. Established in July 1977, The British Motorsport Trust was first registered as a UK Charity and has continued to serve the British motorsport ever since through a variety of safety and trainingrelated initiatives by means of a series of grant aid programmes.

Control Fuels

ETS Racing Fuels

Cedar Court,
Guildford Road,
Leatherhead,
Surrey KT22 9RX
Tel: 07900 743329

Email: adrian.stuart@haltermann-carless.com
Web: www.myetstorace.com/

ETS Racing Fuels is the new name for Carless Racing Fuels, delivering the same proven performance, consistency and technical expertise trusted across major championships. As the control fuel supplier to the BTCC, British F4, Porsche Carrera Cup, Ginetta, TCR UK, British Karting, British Rallying and many others, the only change is the name… the same products, team and service remain in place. Backed by Haltermann Carless, ETS Racing Fuels continues to lead in sustainable fuel innovation with the capability to produce up to 100% sustainable fuels, supported by comprehensive onsite dispensing and fuel analysis services

Dash Cams

Nextbase

Web: http://www.nextbase.co.uk

Nextbase is leading the way in innovation. Designed in the UK, its range of award-winning Dash Cams provides customers with the latest technology at their fingertips.

Data Logging

RACELOGIC - VBOX Motorsport

Unit 10,
Swan Business Centre,
Osier Way, Buckingham,
MK18 1TB

Tel: 01280 823 803
Email: support@racelogic.co.uk
Web: **https://www.vboxmotorsport.co.uk/index.php/en/motorsport-uk**

Racelogic make the VBOX Motorsport range of industry standard video data loggers used by thousands of drivers and coaches looking for improvement in performance; and race series organisers for making accurate and timely stewards' decisions. Designed to be used by anyone – without needing to be a race engineer.

RACE KEEPER

211 Gibson St,
suite 103a,
Leesburg, VA,
20176, USA

Web: **http://race-keeper.com**

Race-Keeper's revolutionary technology transforms every track session into a masterclass in performance. The Road-Keeper HD video data logger captures every apex, every shift, and every millisecond with crystal clarity, letting drivers analyze their technique with professional-grade precision.

Coming soon, Race-Keeper Connect elevates this experience further, offering seamless integration and instant sharing capabilities that put pro-level telemetry in your hands. Whether you're chasing podiums or perfecting your personal best, Race-Keeper delivers unmatched value by turning raw data into actionable insights. Don't just participate in motorsport—dominate it with the competitive advantage that champions rely on. Your racing journey deserves nothing less.

Driver Coaching

iZone

2255 Silverstone Technology Park,
Silverstone Circuit,
Silverstone,
NN12 8GX

Tel: 01327 856872
Web: **https://www.izoneperformance.com/**

iZone is Europe's leading driver training facility, developed by triple World Touring Car Champion Andy Priaulx. We are an Elite Performance Centre, focused on the development of world class drivers, motorsport athletes and mentally-resilient competitors.

Esports

Base Performance Simulators

Unit 1, Manor Park, Warkworth,
Banbury, Oxfordshire OX17 2AG

Phone: +44 (0)1295 276611

Web: **https://www.baseperformance.net/**

IMB RACEWEAR

Web: **http://www.imbracewear.com**

iRacing

Web: **www.iracing.com**

Motorsport UK Esports has partnered with iRacing and can now offer all new paying esports members an exclusive 12-Month subscription to iRacing PLUS the FIA F4 car for free.

The membership comes with 19 unique vehicles and 25 tracks, including Oulton Park. PLUS the FIA F4 car that is not usually included.

UK Sim Racing

Web: **http://www.uksimracing.co.uk**

F33L

Web: https://www.f33l.gg/

Abruzzi

Web: https://abruzzi-official.co.uk/

Heusinkveld

Web: https://heusinkveld.com/

Ferry Travel

NUTT Travel in partnership with Stena Line

Tel: 028 7035 1199

Web: www.nutttravel.com

Based in Northern Ireland, Nutt Travel pride themselves on providing a fast and friendly service at very competitive prices. They provide a personal service where clients can talk to experienced staff who will tailor their package to best meet their requirements. Motorsport UK is pleased to offer members exclusive deals on ferry crossings and accommodation.

FHR Systems

Schroth Racing

Email: germany@eu.schroth.com

Web: www.schroth.com

SCHROTH Racing is a leading supplier of light-weight harnesses, FHR devices and related safety equipment worldwide! SCHROTH supplies to all levels of racing, including F1, IndyCar Series, WRC, NASCAR, Dakar Rally, FIA GT and other racing series around the world. SCHROTH also supplies OEMs, including Porsche, Audi, Lamborghini, Lotus and Mercedes AMG.

Visit www.schroth.com/racing to learn more about why SCHROTH is the fastest-growing manufacturer in high-quality racing and performance restraints!

Fire Extinguishers

FEV Fire Supression

Unit B3 Ford Airfield
Industrial Estate,
Ford Nr Arundel,
West Sussex
BN18 0HY

Tel: 0044 (0)1243 555566
Email: sales@f-e-v.co.uk
Web: www.f-e-v.co.uk

Established 30 years ago, FEV Fire Suppression manufacture high quality fire suppression systems and products for the motorsport industry. Using the very best advancements and developments in technology, our comprehensive range of systems are all homologated to FIA Technical Lists 16, 52 or 97. All systems and handheld extinguishers are designed and developed ensuring performance, weight and space requirements are exceeded. We are chosen suppliers to top level motorsport including F1, F2, FIA GT, Rally and WEC and we take pride in supporting racers and teams with an extensive product range to help them perform at their best and with unparalleled safety in every situation.

PD Extinguishers

Revidge Fold,
Revidge Road,
Blackburn,
Lancashire,
BB1 8DJ

Tel: 01254 954954
Email: chris@pdextinguishers.co.uk
Web: www.pdexitnguishers.co.uk

PD Extinguishers was started by regular rally competitor, organiser and scrutineer, Chris Woodcock concerned that a 10 year life on Extinguishers was another cost barrier to competitors. All PD Extinguishers Stainless Steel systems have a 16 year life due to their high tensile strength and corrosion resistance. After an 18 month program of development testing and certification, he has now attained FIA homologation on 2 systems using aerospace grade AFFF and 3M Novec1230 both available with mechanical and electronic activation, along with a range of hand helds to meet all requirements

Food & Beverage

tastecard

Web: https://www.tastecard.co.uk/

tastecard, enjoy more for less!

Tuck into 2 for 1 meals or 25% off food and drink at big name chains such as Beefeater, Prezzo, Burger King, Krispy Kreme and more plus 1000s of local independent restaurants. You can also now save on cinema tickets at 350+ venues nationwide and discounted days out at the UK's top attractions.

PROCAFFEINATE

Web: https://procaffeinate.co.uk/

Fuel your passion for racing with every cup. As an official Formula 4 partner, Procaffeinate brings you an exclusive coffee subscription designed for true fans who demand performance and precision—in life, on track, and in their coffee. Each delivery features our luxury small-batch beans, roasted to perfection for a taste as refined and powerful as the sport you love. This offer is available only to Motorsport UK members—making it as exclusive as the motorsport paddock itself. Elevate your mornings, celebrate every race weekend, and experience coffee at a championship level.

Subscribe today and own the luxury of speed.

Fuel Analysis

ETS Racing Fuels

Cedar Court,
Guildford Road,
Leatherhead,
Surrey KT22 9RX

Tel: 07900 743329
Email: adrian.stuart@haltermann-carless.com
Web: www.myetstorace.com/

ETS Racing Fuels is the new name for Carless Racing Fuels, delivering the same proven performance, consistency and technical expertise trusted across major championships. As the control fuel supplier to the BTCC, British F4, Porsche Carrera Cup, Ginetta, TCR UK, British Karting, British Rallying and many others, the only change is the name… the same products, team and service remain in place. Backed by Haltermann Carless, ETS Racing Fuels continues to lead in sustainable fuel innovation with the capability to produce up to 100% sustainable fuels, supported by comprehensive onsite dispensing and fuel analysis services

Fuels

ETS Racing Fuels

Cedar Court,
Guildford Road,
Leatherhead,
Surrey KT22 9RX

Tel: 07900 743329
Email: adrian.stuart@haltermann-carless.com
Web: www.myetstorace.com/

ETS Racing Fuels is the new name for Carless Racing Fuels, delivering the same proven performance, consistency and technical expertise trusted across major championships. As the control fuel supplier to the BTCC, British F4, Porsche Carrera Cup, Ginetta, TCR UK, British Karting, British Rallying and many others, the only change is the name… the same products, team and service remain in place. Backed by Haltermann Carless, ETS Racing Fuels continues to lead in sustainable fuel innovation with the capability to produce up to 100% sustainable fuels, supported by comprehensive onsite dispensing and fuel analysis services

WEX

Web: www.wexeuropeservices.com/en-gb

A fuel card is a convenient way to pay for petrol, diesel, and other fuels at filling stations. Rather than paying with cash, credit card or cheque, the driver hands over the fuel card instead.

Fuel Q

WhatsApp: **+44800 140 4641**
Tel: **0800 140 4641**

FuelQ® is the UK's leading fuel card comparison service, now offering our own card too. We use smart technology to connect everyday drivers with fuel savings that were previously hard to find, answering the simple question most drivers ask: Can I save money when I fill up?

Our easy-to-use platform calculates your potential savings and shows nearby fuel stations on an interactive map, helping you find the right fuel card for your specific driving habits. Unlike traditional fuel card providers, FuelQ® has changed the game by making these cards available to individual drivers—not just businesses.

We're committed to putting a fuel card in every driver's pocket, giving everyone access to significant discounts. Our users typically save up to 10% on diesel and 3p per litre on petrol, with no sign-up fees.

Discover a simpler way to fuel up with us – real savings, made easy.

Health & Safety

Safety Rocks

Web: **https://www.safetyrocks.co.uk/**

Truly Tailored safety training that actually sticks.

Since 2015, Safety Rocks Limited has been challenging the notion that health and safety training should be tedious. Whilst others persist with off the shelf training, we develop training that's concise, precise, relevant, and genuinely memorable. Delivering the lasting impact on risk that your organisations require, first time and when it's needed most, especially in such a fast-paced environment.

Hearing Protection

ACS Custom

Beaumont Industrial Estate,
21-24 Beaumont Cl,
Banbury OX16 1TG
Tel: 01295 266665
Email: sarahr@acscustom.com
Web: **ww.acscustom.com/uk**

Specialists in Motorsport Hearing Protection & Communications - ACS Custom delivers precision-engineered, custom-fit hearing protection and in-ear communication systems designed for the demands of racing. Our soft-silicone moulds provide unbeatable comfort, clear audio and essential hearing protection in extreme noise environments. With decades of expertise, we help drivers, teams and marshals stay sharp, connected and performing at their best.

Helmets

Zamp

Tel: 01625 586660
Web: **http://www.zamphelmets.eu**

Zamp Helmets are the fastest growing brand in motorsport. Born out of a demand for high quality yet reasonably priced motorsport equipment. Zamp combines cutting edge designs and leading safety standards to provide the ultimate driving experience.

Zamp offers a range of motorsport and karting helmets that boast incredible quality at a hugely competitive price. FIA, SNELL and CMR helmets available with a range of fantastic accessories and visors.

Hotels

Bicester Hotel Golf & Spa

Green Lane,
Chesterton,
Bicester,
Oxfordshire
OX26 1TH

Tel: 01869 241204
Web: **www.bicesterhotelgolfandspa.com**

Bicester Hotel, Golf and Spa is a stunning 4-star resort set in the rural countryside of Oxfordshire, the resort offers 2 state-of-the-art gyms, an indoor swimming pool, a hydro spa, Elemis Spa, floodlit tennis courts, outdoor swimming lake, outdoor assault course and over 65 fitness classes every week.

Insurance

Adrian Flux

East Winch Hall,
East Winch,
Kings Lynn,
PE32 1HN

Tel: 0800 085 6186
Email: contact-us@adrianflux.co.uk
Web: **www.adrianflux.co.uk/motorsport**

As the UK's largest specialist insurance broker, Adrian Flux have policies to suit all areas of Motorsport including track day, trailer, race and rally vehicle, transporter and motorcycle. We also offer discounts for club membership of up to 15% so get in contact today for all of your insurance requirements.

Marsh Sport

Marsh Sport,
Tower Place East,
Lower Thames St,
London EC3R 5BU

Tel: 0345 872 5060 Monday to Friday 9 to 5.
Web: **marshsport.co.uk/motorsport**

Marsh Sport is a specialist division of Marsh Ltd with dedicated teams across the UK offering insurance broking and risk management advice to the world of sport. Dealing with a specialist insurance adviser helps to ensure that your specific risks and exposures are covered. As the appointed broker to Motorsport UK, we can provide a range of products and services to suit your needs including, on track accident damage, personal accident , property, event liabilities, storage & transit, event cancellation, track days and more.

Kingfisher Insurance

First Floor, 2 Parklands,
Parklands Business Park,
Rubery, B45 9PZ

Tel: 0330 174 7000

Email: info@www.kingfisherinsurance.com
Web: **www.reis.co.uk**

When it comes to motorsport insurance, no two policies are the same. As a specialist broker to the motorsports industry, Kingfisher Motorsport Insurance understand the complexities and variables that need to be considered with this type of cover.

Kingfisher can arrange tailored policies to cover competitors, teams, and enthusiasts at all levels from hobby through to professional. We can offer:

- Motorsports Motor Trade Combined
- Road Insurance for Rally Cars
- Cover for Support Vehicles
- Storage and Transit cover
- Personal Accident and Travel cover
- Cover for competition cars including road sections
- Multi-vehicle policies also available

Motorsport is not only our business, but also our passion and we pride ourselves in having a knowledgeable team of enthusiasts with a broad background in motorsport, both participating and organising, so you can rest assured you're receiving expert guidance should you choose a policy with us.

Ryan Motorsport Insurance

150 Minories,
London,
EC3N 1LS

Tel: +44 (0)1799 524202
Email: info@www.kingfisherinsurance.com
Web: **www.ryanmi.com**

When it comes to motorsport insurance, no two policies are the same. As a specialist broker to the motorsports industry, Kingfisher Motorsport Insurance understand the complexities and variables that need to be considered with this type of cover.

Karting

KartSim

Web: https://www.kart-sim.com/

KartSim manufacturer the most realistic professional karting simulators available on the market, along with market leading karting simulation and training software. We use our hardware and software platforms to host elite-level esports events, offer professional coaching at our state-of-the-art facility in Silverstone, and travel to events in our Mobile Sim Centre. More recently we have began offering on-track coaching days, allowing for customer's to smoothly transition what they have learnt on our simulators into the real world of kart racing. Contact us today to purchase one of our hardware or software packages, or to book a coaching session with us!

TeamSport

Web: https://www.team-sport.co.uk/

TeamSport are the UK's largest indoor karting company and provider for the British Indoor Karting Championship (BIKC). Their mission is to provide customers with the ultimate indoor karting experience; racing the best karts on exciting multi-level tracks. It all started for TeamSport back in 1992 in Guildford, Surrey when they opened their first track. They now have 36 centres across the UK including Birmingham, London, Brighton, Cardiff, Leeds, Newcastle and Manchester.

Motorsport Race Circuits

Castle Combe

Castle Combe Circuit,
Chipenham,
Wiltshire,
SN14 7EY

Tel: 01249 782417
Web: www.castlecombecircuit.co.uk

Castle Combe Circuit is The West Country's home of motorsport that's been welcoming fans of racing, car shows and events for over 65 years.

Motorsport Products

AiM Shop

Unit 8 Riverside,
Campbell Road,
Stoke-On-Trent,
Staffordshire, ST4 4RJ

Tel: +44 01782 393843
Web: https://www.aimshop.com/

AiM Shop provides racers with GPS lap timers, data loggers, dash displays, onboard cameras, sensors and more. Our products are used by motorsport pros and hobbyists across the globe to improve driving and engine performance to gain an edge over their competition to win more races.

Grand Prix Racewear

Unit 1,
Silverstone Park,
Silverstone Circuit,
Northamptonshire,
NN12 8TN

Tel: 01327 855585
Web: www.grandprixracewear.com

Grand Prix Racewear have been selling the best of race and kartwear for over 30 years. Founded in 1987 and based at Silverstone Circuit, the home of British motor racing, the company, having recently been acquired, is embarking on an exciting new phase in its development.

Oil Companies

ETS Racing Fuels

Cedar Court,
Guildford Road,
Leatherhead,
Surrey KT22 9RX

Tel: 07900 743329
Email: adrian.stuart@haltermann-carless.com
Web: www.myetstorace.com/

ETS Racing Fuels is the new name for Carless Racing Fuels, delivering the same proven performance, consistency and technical expertise trusted across major championships. As the control fuel supplier to the BTCC, British F4, Porsche Carrera Cup, Ginetta, TCR UK, British Karting, British Rallying and many others, the only change is the name… the same products, team and service remain in place. Backed by Haltermann Carless, ETS Racing Fuels continues to lead in sustainable fuel innovation with the capability to produce up to 100% sustainable fuels, supported by comprehensive onsite dispensing and fuel analysis services.

Retail

Halfords

Web: www.halfords.com

Halfords are pleased to offer Motorsport UK members a discount off anything in store. Halfords has over 460 stores nationwide offering more than 15,000 different product lines, from car parts and cycles through to the latest in-car technology, child seats, roof boxes and outdoor leisure and camping equipment, Halfords has it all!

OGIO

Tel: 0800 026 4653
Web: https://eu.ogio.com

OGIO has a long-standing history in motorsport creating products that provide both great functionality, innovative designs and technology to support any motorsport fan on the go. As a brand specialising in creating high performance luggage and travel gear it is ideally placed to support the general race goer for a day trip out to the hardened racing fan that takes in every race meeting.

Roll Bars/Cages

Caged Laser Engineering (SW) Ltd.

Unit 12,
Ash Farm Business Park,
Radstock.
BA3 5EX

Tel: 01761 239133
Email: info@cagedlaser.co.uk
Web: www.cagedlaser.co.uk

Caged Laser Engineering (SW) Ltd is an automotive supply chain manufacturer capable of supporting one-off bespoke applications through to large scale production runs. Based in the southwest of England near Bath, we specialise in end to end fabrication of tubular, sheet metal and various steel sections, with vast experience in aluminium, mild steel, stainless steel and titanium. Supported by an in-house CAD design service, a suite of CNC machines (laser, press brake, tube bender, mill and lathe), a team of experience TIG and MIG welders and a powder coating painting facility, we can help.

Safety Devices International Ltd.

Cambridge House,
Holborn Avenue,
Mildenhall,
Suffolk
IP28 7AN

Tel: 01638 713606
Email: motorsport@safetydevices.com

With the latest CAD, CMM and laser scanning technology in house, Safety Devices continue to lead the rollover protection industry after almost 50 years. From historic marques through to latest generation vehicles, Safety Devices produce Europe's largest range of roll cages with over 500 current designs and a back-catalogue of 2000+. Reputed for exceptional design standards, you can be confident your cage will be made from quality materials and be an excellent fit. Most designs meet Motorsport UK/FIA regulations. Find your cage using our website's roll cage selector and buy through our dealer network. For bespoke work, contact us direct.

Seatbelts

Schroth Racing

Email: germany@eu.schroth.com
Web: www.schroth.com

SCHROTH Racing is a leading supplier of light-weight harnesses, FHR devices and related safety equipment worldwide! SCHROTH supplies to all levels of racing, including F1, IndyCar Series, WRC, NASCAR, Dakar Rally, FIA GT and other racing series around the world. SCHROTH also supplies OEMs, including Porsche, Audi, Lamborghini, Lotus and Mercedes AMG.

Visit www.schroth.com/racing to learn more about why SCHROTH is the fastest-growing manufacturer in high-quality racing and performance restraints!

Seats

Corbeau Seats Ltd.

17 Wainwright Close,
East Sussex,
TN38 9PP

Tel: 01424 854499
Email: sales@corbeau-seats.com
Web: www.corbeau-seats.com

Established 60 years ago making us the first ever manufacturer in the world to produce competition racing seats. Corbeau today is still at the cutting edge of technical development where Safety, style and comfort are key attributes. Corbeau has a full range of FIA 8855-1999, FIA 8862-2009 and FIA 8855-2021 seats to suit most disciplines in motorsport all manufactured in our UK facility. The full range are all FHR compatible and are available in either GRP, Kevlar and Carbon. Our FIA 8862-2009 and 8855-2021 ARS and ECS Seats are produced in Pre-preg Carbon and come with a 10-year FIA homologation. Check out our full range of Corbeau FIA 8855-2021 specification seats, which is available in four sizes.

Schroth Profi Seat

Web: www.schroth.com

With our worldwide name already established in motor racing safety the SCHROTH Racing Profi Seat brings extra benefits to every racing driver in any car. Our reputation is built on quality and unrivaled experience, which we are proud to say extends to our SCHROTH Racing Profi Seat. The SCHROTH Racing Profi Seat is racing´s best individual seat solution. Make your own customized seat insert!

Subscriptions

Haynes Manuals

Haynes Publishing,
Sparkford,
Yeovil,
Somerset, BA22 7JJ,
United Kingdom

Tel: +44 (0) 1206 256101
Web: https://haynes.com/en-gb/

The creator of the world-famous Owner's Workshop Manual offers a huge range of car and motorcycle repair manuals, with step-by-step guidance to complete each job. Most titles are now available in online formats, including video tutorials, colour pictures and interactive fault-finding tools.

Aside from hands-on guides, Haynes publishes an extensive selection of books on motorsport, military, aviation, maritime, history, food, Star Wars and more. This includes Haynes Explains, a range of parody books on the eponymous manual format, and Bluffers Guides - the fastest way to learn quickly and sound like an expert on any subject.

Readly

Web: www.gb.readly.com/motorsport

Readly is the UK's largest digital newsstand, with more than 7,500 magazines and newspapers all available for unlimited reading!

Suspension

Proflex

Revidge Fold Garage,
Revidge Road,
Blackburn,
Lancashire,
BB1 8DJ

Email: sales@proflexuk.com
Web: www.proflexuk.com

Renowned for quality and performance, we are the number one choice of some of the best drivers and teams in the world across all disciplines of the sport. Our shock absorbers are beautifully engineered and manufactured to the highest of standards, being designed to reliably perform again and again under the most extreme rallying and race conditions.

Tools

Wera Tools

Web: www.wera-tools.co.uk

Wera Tools is a global tools' specialist that firmly believes its tools make life simpler, safer and 'full of joy' for users.

Tyres

Davanti Tyres

Oak House, Woodlands Business Park,
Ashton Road, Newton le Willows,
WA12 0HF

Tel: 0330 303 1499
Email: info@davanti-tyres.com
Web: davanti-tyres.com

Based in the North of England, Davanti Tyres' extensive product range spans applications for a wide variety of commercial and passenger car vehicles, including UHP and track.

The Protoura Race has been designed to provide unbeatable performance on the track. Its semi-slick tread design provides a combination of excellent dry grip and control in the wet without compromising speed. It was selected as the control tyre in the 2025 inaugural Suzuki Swift Challenge and the Mini Challenge Clubsport series. For 2026, Davanti will enter a new partnership with Mini Rally Challenge, where Protoura Race will be the control tyre for all asphalt events in the series.

Pirelli Tyres Ltd.

Derby Road,
Burton-on-Trent,
DE13 0BH

Tel: 01283 525252
Web: www.pirelli.co.uk

Motorsport UK have formed a partnership with Pirelli Tyres, meaning all members can now benefit from an exclusive offer from Pirelli. Pirelli's recognised link to motorsport has seen the introduction of many motorsport innovations into its consumer products, always ensuring high levels of performance and safety.

For more information, log-on to the Motorsport UK member portal

Protyre

Govan Road,
Fenton Industrial Estate,
Stoke-on-Trent
ST4 2RS

Tel: 01782 411 001
Web: http://www.protyre.co.uk/motorsport

Whether you are a top championship contender or a track day star we've got the best choice, best price and best availability of tyres to suit your racing needs.

Official race championship tyre service providers for The Protyre Motorsport UK Asphalt Rally Championship, MSV British F3, British GT, Porsche, Renault and Ginetta.

Principle suppliers of Pirelli Trofero R; Toyo R888R.

Trusted suppliers of Michelin, Pirelli, Hoosier, Kuhmo V70A and Yokohama A048 motorsport tyres.

Sole UK Supplier of Hoosier Rally Tyres and Michelin Competition Tyres

Specialist rates for affiliates.

Largest stock of Ultra High Performance and Rally tyres in UK.

Fully equipped mobile workshop for track day tyre fittings.

Longstone

Longstone Classic Tyres
Hudsons Yard
Bawtry
Doncaster
DN106NX

Tel: 01302 711123
Email: Info@longstonetyres.co.uk
Web: **www.longstone.com**

Longstone classic Tyres for the best quality period tyres

Kumho Tyre

Kumho House,
9 Mitchell Court,
Castle Mound Way,
Rugby, CV23 0UY

Tel: 01788 820200
Email: ktukmarketing@kumhotire.com
Web: **www.kumhotire.com/uk**

Kumho has a long and successful history of supplying tyres for circuit racing, rallying, hill climbing, rallycross and track days. Please contact us for further information on our current range and stockists.

Wheels

Speedline Corse

SL Corse Ltd,
Haybrook Industrial Estate,
Telford
TF7 4QW
UK

Tel: 01952 582825
Email: info@speedlinecorse.co.uk
Web: **www.speedlinecorse.net**

The Strength of Experience. The specialist motorsport division of one of the World's premier wheel manufacturers, Speedline Corse's advanced production processes, including our unique flow forming technology, have enabled us to supply premium racing and rally wheels for leading motorsport teams and car manufacturers since 1975. Speedline Corse customers have won 83 FIA sanctioned world championship titles to date as well as countless national and regional championships across the globe.

Borrani

Hudsons Yard
Bawtry
Doncaster DN106NX

Tel: 01302 711123
Web: **www.borrani.com**